(NAVY) NAVAIR 17-15-50.4
(ARMY) TM 38-301-4
(AIR FORCE) T.O. 33-1-37-4
(COAST GUARD) TO 33-1-37-4

30 August 2013

TECHNICAL MANUAL

JOINT OIL ANALYSIS PROGRAM MANUAL

VOLUME IV

LABORATORY ANALYTICAL METHODOLOGY AND EQUIPMENT CRITERIA (NON-AERONAUTICAL)

This manual supersedes NAVAIR 17-15-50.4 dated 31 July 2012.

This manual is incomplete without NAVAIR-17-15-50.1, NAVAIR-17-15-50.2 and NAVAIR-17-15-50.3

DISTRIBUTION STATEMENT A. Approved for public release; distribution is unlimited, determined on 30 August 2013. Other requests for this document shall be referred to Navy Oil Analysis Program, Naval Air Warfare Center, Aircraft Division, Air-4.4.6, 22229 Elmer Road, Patuxent River MD 20670-1534 for all volumes.

DESTRUCTION NOTICE - For unclassified, limited documents, destroy by any method that will prevent disclosure of contents or reconstruction of the document.

Published by direction of
Commander, Naval Air Systems Command
under the authority of the Joint Oil Analysis Program Regulation AFI 21-131 (I), AR 700-132 and OPNAVINST 4731.1C.

0817LP9840877

NUMERICAL INDEX OF EFFECTIVE WORK PACKAGES/PAGES

List of Current Changes

Change #	*Date*		*Change #*	*Date*
Original 0	30 March 2013			

Only those work packages/pages assigned to the manual are listed in this index. Dispose of the superseded issues of the technical manuals. Superseded classified technical information shall be destroyed in accordance with applicable regulations. The portion of text affected in a changed or revised work package is indicated by change bars or the change symbol "R" in the outer margin of each column of text. Changes to illustrations are indicated by pointing hands or change bars, as applicable.

Total number of pages in Volume I of this manual is 436.

Note: the HMWS WP for this manual is located in Volume II

WP Number	Title	Total Number of Pages	Change No.
A	NUMBERICAL INDEX OF EFFECTIVE WORK PACKAGES/PAGES	A thru N	0
TPDR	LIST OF TECHNICAL PUBLICATIONS DEFICIENCY REPORTS INCORPORATED	TPDR-1 thru TPDR-2	0
001 00	INTRODUCTION	1 thru 2	0
002 00	NON-AERONAUTICAL EQUIPMENT ANALYTICAL METHODOLOGY	1 thru 18	0
003 00	LABORATORY RECOMMENDATION CODES, NON-AERONAUTICAL EQUIPMENT (NOT FOR ARMY USE)	1 thru 2	0
004 00	COMPONENT: ALLIS-CHALMERS 3500 ENGINE LUBRICANT: MIL-L-2104	1 thru 2	0
005 00	COMPONENT: AMERICAN 244F ENGINE LUBRICANT:	1 thru 2	0
006 00	COMPONENT: HMMWV 6.2 LITER ENGINE UPPER WEAR METAL LIMITS	1 thru 2	0
007 00	COMPONENT: CASE 504BD/A-504BDT (ENGINE) LUBRICANT: MIL-L-2104	1 thru 2	0
008 00	COMPONENT: CATERPILLAR 3208 (ENGINE) LUBRICANT: MIL-L-2104	1 thru 2	0
009 00	COMPONENT: CATERPILLAR 3304 (ENGINE) LUBRICANT:	1 thru 2	0
010 00	COMPONENT: CATERPILLAR 3306 (ENGINE) LUBRICANT: MIL-L-2104	1 thru 2	0

WP Number	Title	Total Number of Pages	Change No.
011 00	COMPONENT: CATERPILLAR 11614457 (ENGINE) LUBRICANT:	1 thru 2	0
012 00	COMPONENT: CATERPILLAR D333/C/T (ENGINE) LUBRICANT: MIL-L-2104	1 thru 2	0
013 00	COMPONENT: CATERPILLAR D343T/A (ENGINE) LUBRICANT: MIL-L-2104	1 thru 2	0
014 00	COMPONENT: CATERPILLAR D198ER (ENGINE) LUBRICANT: MIL-L-2104	1 thru 2	0
015 00	COMPONENT: CATERPILLAR D298/D298ERX37 (ENGINE) LUBRICANT: MIL-L-2104	1 thru 2	0
016 00	COMPONENT: CATERPILLAR D397 (ENGINE) LUBRICANT:	1 thru 2	0
017 00	COMPONENT: CATERPILLAR D17000 (ENGINE) LUBRICANT:	1 thru 2	0
018 00	COMPONENT: CONTINENTAL AVDS 1790-2A/2C/2D/ (ENGINE) LUBRICANT: MIL-L-2104	1 thru 4	0
019 00	COMPONENT: CONTINENTAL AVDS 1790-2DR (ENGINE) LUBRICANT: MIL-L-2104	1 thru 2	0
020 00	COMPONENT: CONTINENTAL AVDS1790-8CR (ENGINE) LUBRICANT: MIL-L-2104	1 thru 4	0
021 00	COMPONENT: CONTINENTAL LD/LDS/LDT 465-1/-2 (ENGINE) LUBRICANT: MIL-L-2104	1 thru 4	0
022 00	COMPONENT: CONTINENTAL LDS-427-2 (ENGINE) LUBRICANT: MIL-L-2104	1 thru 2	0
023 00	COMPONENT: CUMMINS HBI-600 (ENGINE) LUBRICANT:	1 thru 2	0
024 00	COMPONENT: CUMMINS JN6 (ENGINE) LUBRICANT: MIL-L-2104	1 thru 2	0
025 00	COMPONENT: CUMMINS LI-600 (ENGINE) LUBRICANT:	1 thru 2	0
026 00	COMPONENT: CUMMINS NHBIS-600 (ENGINE) LUBRICANT:	1 thru 2	0
027 00	COMPONENT: CUMMINS NHC 250 (ENGINE) LUBRICANT: MIL-L-2104	1 thru 2	0
028 00	COMPONENT: CUMMINS NTC 290 (ENGINE) LUBRICANT: MIL-L-2104	1 thru 2	0
029 00	COMPONENT: CUMMINS NTA/NTC 400 (ENGINE) LUBRICANT: MIL-L-2104	1 thru 2	0
030 00	COMPONENT: CUMMINS V8-265 (ENGINE) LUBRICANT:	1 thru 2	0

WP Number	Title	Total Number of Pages	Change No.
031 00	COMPONENT: CUMMINS V8-300 (ENGINE) LUBRICANT:	1 thru 2	0
032 00	COMPONENT: CUMMINS VT-400 (ENGINE) LUBRICANT:	1 thru 2	0
033 00	COMPONENT: CUMMINS VTA-903 (ENGINE) LUBRICANT: MIL-L-2104	1 thru 2	0
034 00	COMPONENT: DETROIT DIESEL ALLISON 190 (ENGINE) LUBRICANT: MIL-L-2104	1 thru 2	0
035 00	COMPONENT: DETROIT DIESEL ALLISON 3-53 (ENGINE) LUBRICANT: MIL-L-2104	1 thru 2	0
036 00	COMPONENT: DETROIT DIESEL ALLISON 3080 (ENGINE) LUBRICANT:	1 thru 2	0
037 00	COMPONENT: DETROIT DIESEL ALLISON 4-53/N (ENGINE) LUBRICANT: MIL-L-2104	1 thru 2	0
038 00	COMPONENT: DETROIT DIESEL ALLISON 4057C (ENGINE) LUBRICANT:	1 thru 2	0
039 00	COMPONENT: DETROIT DIESEL ALLISON 6V53/T (ENGINE) LUBRICANT: MIL-L-2104	1 thru 2	0
040 00	COMPONENT: DETROIT DIESEL ALLISON 8V53T (ENGINE) LUBRICANT: MIL-L-2104	1 thru 2	0
041 00	COMPONENT: DETROIT DIESEL ALLISON 8V71T (ENGINE) LUBRICANT: MIL-L-2104	1 thru 2	0
042 00	COMPONENT: DETROIT DIESEL ALLISON 8V92T (ENGINE) LUBRICANT: MIL-L-2104	1 thru 2	0
043 00	COMPONENT: DETROIT DIESEL ALLISON 12V71T (ENGINE) LUBRICANT: MIL-L-2104	1 thru 2	0
044 00	COMPONENT: ELECTRO MOTIVE DIVISION 8-567B (ENGINE) LUBRICANT:	1 thru 2	0
045 00	COMPONENT: ELECTRO MOTIVE DIVISION 16-645E/E6 (ENGINE) LUBRICANT:	1 thru 2	0
046 00	COMPONENT: FAIRBANKS MORSE 38D-81/8 (ENGINE) LUBRICANT:	1 thru 2	0
047 00	COMPONENT: INTERNATIONAL HARVESTER DT-466B (ENGINE) LUBRICANT:	1 thru 2	0
048 00	COMPONENT: JOHN DEERE 6059T-DW-04 5.9 LITER (ENGINE) LUBRICANT:	1 thru 2	0
049 00	COMPONENT: LYCOMING AGT 1500 TURBINE (ENGINE) LUBRICANT: MIL-L-23699	1 thru 2	0
050 00	COMPONENT: MACK ENDT-673 (ENGINE) LUBRICANT: MIL-L-2104	1 thru 2	0

WP Number	Title	Total Number of Pages	Change No.
051 00	COMPONENT: MAN D-2840 (ENGINE) LUBRICANT: MIL-L-2104	1 thru 2	0
052 00	COMPONENT: MERCEDES BENZ OM617952 (ENGINE) LUBRICANT: MIL-L-2104	1 thru 2	0
053 00	COMPONENT: C-180 (ENGINE) LUBRICANT:	1 thru 2	0
054 00	COMPONENT: GTCP 85127 LUBRICANT:	1 thru 2	0
055 00	COMPONENT: SD802 (ENGINE) LUBRICANT:	1 thru 2	0
056 00	COMPONENT: CATERPILLAR D5/3T 3394 (TRANSMISSION) LUBRICANT: MIL-L-2104	1 thru 2	0
057 00	COMPONENT: CATERPILLAR POWERSHIFT 4R219 (TRANSMISSION) LUBRICANT: MIL-L-2104	1 thru 2	0
058 00	COMPONENT: CATERPILLAR 5R3855 (TRANSMISSION) LUBRICANT:	1 thru 2	0
059 00	COMPONENT: CATERPILLAR D7155 (TRANSMISSION) LUBRICANT: MIL-L-2104	1 thru 2	0
060 00	COMPONENT: CLARK 4000 (TRANSMISSION) LUBRICANT: MIL-L-2104	1 thru 2	0
061 00	COMPONENT: DETROIT DIESEL ALLISON 3331-1 (TRANSMISSION) LUBRICANT:	1 thru 2	0
062 00	COMPONENT: DETROIT DIESEL ALLISON CD 850 6A (TRANSMISSION) LUBRICANT: MIL-L-2104	1 thru 4	0
063 00	COMPONENT: DETROIT DIESEL ALLISON CLBT 750 (TRANSMISSION) LUBRICANT: MIL-L-2104	1 thru 2	0
064 00	COMPONENT: DETROIT DIESEL ALLISON CRT 3531-1 (TRANSMISSION) LUBRICANT:	1 thru 2	0
065 00	COMPONENT: DETROIT DIESEL ALLISON G 411-2A (TRANSMISSION) LUBRICANT: MIL-L-2104	1 thru 2	0
066 00	COMPONENT: DETROIT DIESEL ALLISON HT 740D (TRANSMISSION) LUBRICANT: MIL-L-2104	1 thru 2	0
067 00	COMPONENT: DETROIT DIESEL ALLISON HT 750CRD (TRANSMISSION) LUBRICANT: MIL-L-2104	1 thru 2	0
068 00	COMPONENT: DETROIT DIESEL ALLISON HT 754CRD (TRANSMISSION) LUBRICANT: MIL-L-2104	1 thru 2	0

WP Number	Title	Total Number of Pages	Change No.
069 00	COMPONENT: DETROIT DIESEL ALLISON MT 654CR (TRANSMISSION) LUBRICANT: MIL-L-2104	1 thru 2	0
070 00	COMPONENT: DETROIT DIESEL ALLISON THM-3L80 (TRANSMISSION) LUBRICANT: DEXTRON II, III, IV	1 thru 2	0
071 00	COMPONENT: DETROIT DIESEL ALLISON TT2421-1 (TRANSMISSION) LUBRICANT:	1 thru 2	0
072 00	COMPONENT: DETROIT DIESEL ALLISON TX100-1 (TRANSMISSION) LUBRICANT: MIL-L-2104	1 thru 2	0
073 00	COMPONENT: DETROIT DIESEL ALLISON X1100-3B (TRANSMISSION) LUBRICANT: MIL-L-2104	1 thru 4	0
074 00	COMPONENT: DETROIT DIESEL ALLISON XT1410-4 (TRANSMISSION) LUBRICANT: CAT-TDTO-TO4	1 thru 2	0
075 00	COMPONENT: DETROIT DIESEL ALLISON XT1410-5A TRANSMISSION) LUBRICANT: CAT-TDTO-TO4	1 thru 2	0
076 00	COMPONENT: DETROIT DIESEL ALLISON G 250-1A (TRANSMISSION) LUBRICANT: MIL-L-2104	1 thru 2	0
077 00	COMPONENT: GENERAL ELECTRIC HMPT-500 (TRANSMISSION) LUBRICANT: MIL-L-2104	1 thru 2	0
078 00	COMPONENT: INTERNATIONAL HARVESTER S-700 (TRANSMISSION) LUBRICANT:	1 thru 2	0
079 00	COMPONENT: MAN ZF4S-15GP (TRANSMISSION) LUBRICANT: MIL-L-2104	1 thru 2	0
080 00	COMPONENT: MERCEDES BENZ WF4A018 (TRANSMISSION) LUBRICANT: MIL-L-2104	1 thru 2	0
081 00	COMPONENT: REINTJES VWS2232 (MARINE GEARBOX) LUBRICANT:	1 thru 2	0
082 00	COMPONENT: TWIN DISC 8FLW1307 (TRANSMISSION) LUBRICANT:	1 thru 2	0
083 00	COMPONENT: 3S7094 (TRANSMISSION) LUBRICANT:	1 thru 2	0
084 00	COMPONENT: 5R6192 (TRANSMISSION) LUBRICANT:	1 thru 2	0
085 00	COMPONENT: 7G4851 (TRANSMISSION) LUBRICANT:	1 thru 2	0
086 00	COMPONENT: 8S3543 (TRANSMISSION) LUBRICANT:	1 thru 2	0

WP Number	Title	Total Number of Pages	Change No.
087 00	COMPONENT: C-51-2012 (TRANSMISSION) LUBRICANT:	1 thru 2	0
088 00	COMPONENT: HS 400-3 (TRANSMISSION) LUBRICANT: MIL-L-2104	1 thru 2	0
089 00	COMPONENT: M1070 TRANSMISSION LUBRICANT:	1 thru 2	0
090 00	COMPONENT: M1074 TRANSMISSION LUBRICANT:	1 thru 2	0
091 00	COMPONENT: M1075 TRANSMISSION LUBRICANT:	1 thru 2	0
092 00	COMPONENT: THM-400/THM-4L80E TRANSMISSION WEAR METAL BASELINES LUBRICANT:	1 thru 2	0
093 00	COMPONENT: TX200-6 (TRANSMISSION) LUBRICANT:	1 thru 2	0
094 00	COMPONENT: ZED F MODEL WG-120 (TRANSMISSION) LUBRICANT:	1 thru 2	0
095 00	COMPONENT: M1000 HYDRAULIC SYSTEM LUBRICANT:	1 thru 2	0
096 00	COMPONENT: M1070 HYDRAULIC SYSTEM LUBRICANT:	1 thru 2	0
097 00	COMPONENT: M1074 HYDRAULIC SYSTEM LUBRICANT:	1 thru 2	0
098 00	COMPONENT: M1075 HYDRAULIC SYSTEM LUBRICANT:	1 thru 2	0
099 00	COMPONENT: M88A2 HERCULES MAIN HYDRAULIC SYSTEM LUBRICANT: MIL-H-46170	1 thru 2	0
100 00	COMPONENT: M911 HYDRAULIC SYSTEM LUBRICANT:	1 thru 2	0
101 00	NAVY (SHIPS) PHYSICAL PROPERTY TEST LIMITS BY TYPE OIL AND USE	1 thru 12	0
102 00	TYPE EQUIPMENT: GAS TURBINE SYSTEM/USE: MAIN PROPULSION EQUIPMENT MODEL: GE-LM2500	1 thru 2	0
103 00	TYPE EQUIPMENT: GAS TURBINE SYSTEM/USE: SHIPS SERVICE GENERATOR EQUIPMENT MODEL: ALLISON 501K	1 thru 2	0
104 00	TYPE EQUIPMENT: DIESEL ENGINE SYSTEM/USE: MAIN PROPULSION EQUIPMENT MODEL: ALCO 12 251-C	1 thru 2	0

WP Number	Title	Total Number of Pages	Change No.
105 00	TYPE EQUIPMENT: DIESEL ENGINE SYSTEM/USE: MAIN PROPULSION EQUIPMENT MODEL: ALCO 16 251-C	1 thru 2	0
106 00	TYPE EQUIPMENT: DIESEL ENGINE SYSTEM/USE: MAIN PROPULSION EQUIPMENT MODEL: CATERPILLAR 16 D399	1 thru 2	0
107 00	TYPE EQUIPMENT: DIESEL ENGINE SYSTEM/USE: MAIN PROPULSION EQUIPMENT MODEL: CUMMINS VT12-0875MPH/LH1X2	1 thru 2	0
108 00	TYPE EQUIPMENT: DIESEL ENGINE SYSTEM/USE: MAIN PROPULSION EQUIPMENT MODEL: CUMMINS VT12-875MRH/LH	1 thru 2	0
109 00	TYPE EQUIPMENT: DIESEL ENGINE SYSTEM/USE: MAIN PROPULSION EQUIPMENT MODEL: DETROIT DIESEL (GM) 12005; 12006	1 thru 2	0
110 00	TYPE EQUIPMENT: DIESEL ENGINE SYSTEM/USE: MAIN PROPULSION EQUIPMENT MODEL: DETROIT DIESEL (GM) 12VA6217	1 thru 2	0
111 00	TYPE EQUIPMENT: DIESEL ENGINE SYSTEM/USE: MAIN PROPULSION EQUIPMENT MODEL: DETROIT DIESEL (GM) 6-71; 12007M	1 thru 2	0
112 00	TYPE EQUIPMENT: DIESEL ENGINE SYSTEM/USE: MAIN PROPULSION EQUIPMENT MODEL: DETROIT DIESEL (GM) 6V53N	1 thru 2	0
113 00	TYPE EQUIPMENT: DIESEL ENGINE SYSTEM/USE: MAIN PROPULSION EQUIPMENT MODEL: ELECTRO MOTIVE (GM) 12-268A	1 thru 2	0
114 00	TYPE EQUIPMENT: DIESEL ENGINE SYSTEM/USE: MAIN PROPULSION EQUIPMENT MODEL: ELECTRO MOTIVE (GM) 16-248	1 thru 2	0
115 00	TYPE EQUIPMENT: DIESEL ENGINE SYSTEM/USE: MAIN PROPULSION EQUIPMENT MODEL: ELECTRO MOTIVE (GM) 12-278	1 thru 2	0
116 00	TYPE EQUIPMENT: DIESEL ENGINE SYSTEM/USE: MAIN PROPULSION EQUIPMENT MODEL: ELECTRO (GM) 8-278ANN	1 thru 2	0
117 00	TYPE EQUIPMENT: DIESEL ENGINE SYSTEM/USE: MAIN PROPULSION EQUIPMENT MODEL: ELECTRO (GM) 8-498NN	1 thru 2	0
118 00	TYPE EQUIPMENT: DIESEL ENGINE SYSTEM/USE: MAIN PROPULSION EQUIPMENT MODEL: ELECTRO (GM) 16-645E5LLRRLR	1 thru 2	0

WP Number	Title	Total Number of Pages	Change No.
119 00	TYPE EQUIPMENT: DIESEL ENGINE SYSTEM/USE: MAIN PROPULSION EQUIPMENT MODEL: FM (COLT) 10-38D8 1/8	1 thru 2	0
120 00	TYPE EQUIPMENT: DIESEL ENGINE SYSTEM/USE: MAIN PROPULSION EQUIPMENT MODEL: FM (COLT) 10-38NTD8 1/8	1 thru 2	0
121 00	TYPE EQUIPMENT: DIESEL ENGINE SYSTEM/USE: MAIN PROPULSION EQUIPMENT MODEL: FM (COLT) 12-38ND8 1/8	1 thru 2	0
122 00	TYPE EQUIPMENT: DIESEL ENGINE SYSTEM/USE: MAIN PROPULSION EQUIPMENT MODEL: FM (COLT) 8-38ND8 1/8	1 thru 2	0
123 00	TYPE EQUIPMENT: DIESEL ENGINE SYSTEM/USE: MAIN PROPULSION EQUIPMENT MODEL: GM 16-645E2	1 thru 2	0
124 00	TYPE EQUIPMENT: DIESEL ENGINE SYSTEM/USE: MAIN PROPULSION EQUIPMENT MODEL: GM 8V-71T	1 thru 2	0
125 00	TYPE EQUIPMENT: DIESEL ENGINE SYSTEM/USE: MAIN PROPULSION EQUIPMENT MODEL: PACKARD ID-1700-T3/T4	1 thru 2	0
126 00	TYPE EQUIPMENT: DIESEL ENGINE SYSTEM/USE: MAIN PROPULSION EQUIPMENT MODEL: RUSTON PAXMAN 12-YCLM	1 thru 2	0
127 00	TYPE EQUIPMENT: DIESEL ENGINE SYSTEM/USE: MAIN PROPULSION EQUIPMENT MODEL: WAUKESHA L1616DSIN/TO	1 thru 2	0
128 00	TYPE EQUIPMENT: DIESEL ENGINE SYSTEM/USE: SHIPS SERVICE GENERATOR EQUIPMENT MODEL: ALCO 8-251E	1 thru 2	0
129 00	TYPE EQUIPMENT: DIESEL ENGINE SYSTEM/USE: SHIPS SERVICE GENERATOR EQUIPMENT MODEL: CATERPILLAR 6-D-353	1 thru 2	0
130 00	TYPE EQUIPMENT: DIESEL ENGINE SYSTEM/USE: SHIPS SERVICE GENERATOR EQUIPMENT MODEL: CATERPILLAR D353	1 thru 2	0
131 00	TYPE EQUIPMENT: DIESEL ENGINE SYSTEM/USE: SHIPS SERVICE GENERATOR EQUIPMENT MODEL: CUMMINS 6-NH220GPG84	1 thru 2	0
132 00	TYPE EQUIPMENT: DIESEL ENGINE SYSTEM/USE: SHIPS SERVICE GENERATOR EQUIPMENT MODEL: CUMMINS 6-NH220PG92	1 thru 2	0

WP Number	Title	Total Number of Pages	Change No.
133 00	TYPE EQUIPMENT: DIESEL ENGINE SYSTEM/USE: SHIPS SERVICE GENERATOR EQUIPMENT MODEL: GM CUMMINS 6-NT400GCM	1 thru 2	0
134 00	TYPE EQUIPMENT: DIESEL ENGINE SYSTEM/USE: SHIPS SERVICE GENERATOR EQUIPMENT MODEL: DETROIT DIESEL (GM) 16V-149 TI	1 thru 2	0
135 00	TYPE EQUIPMENT: DIESEL ENGINE SYSTEM/USE: SHIPS SERVICE GENERATOR EQUIPMENT MODEL: DETROIT DIESEL (GM) 16-7163-7200	1 thru 2	0
136 00	TYPE EQUIPMENT: DIESEL ENGINE SYSTEM/USE: SHIPS SERVICE GENERATOR EQUIPMENT MODEL: DETROIT DIESEL (GM) 16V-71	1 thru 2	0
137 00	TYPE EQUIPMENT: DIESEL ENGINE SYSTEM/USE: SHIPS SERVICE GENERATOR EQUIPMENT MODEL: DETROIT DIESEL (GM) 3-71-3151	1 thru 2	0
138 00	TYPE EQUIPMENT: DIESEL ENGINE SYSTEM/USE: SHIPS SERVICE GENERATOR EQUIPMENT MODEL: DETROIT DIESEL (GM) 6-6151ENOD671RC	1 thru 2	0
139 00	TYPE EQUIPMENT: DIESEL ENGINE SYSTEM/USE: SHIPS SERVICE GENERATOR EQUIPMENT MODEL: ELECTRO MOTIVE (GM) 3-268A	1 thru 2	0
140 00	TYPE EQUIPMENT: DIESEL ENGINE SYSTEM/USE: SHIPS SERVICE GENERATOR EQUIPMENT MODEL: ELECTRIC MOTIVE (GM) 8-268A	1 thru 2	0
141 00	TYPE EQUIPMENT: DIESEL ENGINE SYSTEM/USE: SHIPS SERVICE GENERATOR EQUIPMENT MODEL: ELECTRO MOTIVE (GM) 8-56CR	1 thru 2	0
142 00	TYPE EQUIPMENT: DIESEL ENGINE SYSTEM/USE: SHIPS SERVICE GENERATOR EQUIPMENT MODEL: ELECTRO MOTIVE (GM) 12-645E2LL	1 thru 2	0
143 00	TYPE EQUIPMENT: DIESEL ENGINE SYSTEM/USE: SHIPS SERVICE GENERATOR EQUIPMENT MODEL: FM (COLT) 8-38D8 1/8	1 thru 2	0
144 00	TYPE EQUIPMENT: DIESEL ENGINE SYSTEM/USE: SHIPS SERVICE GENERATOR EQUIPMENT MODEL: GM 8-268	1 thru 2	0
145 00	TYPE EQUIPMENT: DIESEL ENGINE SYSTEM/USE: SHIPS SERVICE GENERATOR EQUIPMENT MODEL: GM 4-71	1 thru 2	0
146 00	TYPE EQUIPMENT: DIESEL ENGINE SYSTEM/USE: SHIPS SERVICE GENERATOR EQUIPMENT MODEL: HERCULES 6-DWXD	1 thru 2	0

WP Number	Title	Total Number of Pages	Change No.
147 00	TYPE EQUIPMENT: DIESEL ENGINE SYSTEM/USE: SHIPS SERVICE GENERATOR EQUIPMENT MODEL: RUSTON PAXMAN 8-RPHCZ	1 thru 2	0
148 00	TYPE EQUIPMENT: DIESEL ENGINE SYSTEM/USE: EMERGENCY GENERATOR EQUIPMENT MODEL: ALCO 16-251B16	1 thru 2	0
149 00	TYPE EQUIPMENT: DIESEL ENGINE SYSTEM/USE: EMERGENCY GENERATOR EQUIPMENT MODEL: ALCO 8-251-E	1 thru 2	0
150 00	TYPE EQUIPMENT: DIESEL ENGINE SYSTEM/USE: EMERGENCY GENERATOR EQUIPMENT MODEL: CUMMINS 6-NH220BI	1 thru 2	0
151 00	TYPE EQUIPMENT: DIESEL ENGINE SYSTEM/USE: EMERGENCY GENERATOR EQUIPMENT MODEL: DETROIT DIESEL (GM) 71637/300016V71/LC	1 thru 2	0
152 00	TYPE EQUIPMENT: DIESEL ENGINE SYSTEM/USE: EMERGENCY GENERATOR EQUIPMENT MODEL: DETROIT DIESEL (GM) 6-71RC7	1 thru 2	0
153 00	TYPE EQUIPMENT: DIESEL ENGINE SYSTEM/USE: EMERGENCY GENERATOR EQUIPMENT MODEL: ELECTRO MOTIVE (GM) 3-268A	1 thru 2	0
154 00	TYPE EQUIPMENT: DIESEL ENGINE SYSTEM/USE: EMERGENCY GENERATOR EQUIPMENT MODEL: FM (COLT) 10-38F5 1/4	1 thru 2	0
155 00	TYPE EQUIPMENT: DIESEL ENGINE SYSTEM/USE: EMERGENCY GENERATOR EQUIPMENT MODEL: FM (COLT) 6-38F5 1/4	1 thru 2	0
156 00	TYPE EQUIPMENT: DIESEL ENGINE SYSTEM/USE: EMERGENCY GENERATOR EQUIPMENT MODEL: FM (COLT) 6-38ND8 1/8	1 thru 2	0
157 00	TYPE EQUIPMENT: DIESEL ENGINE SYSTEM/USE: EMERGENCY GENERATOR EQUIPMENT MODEL: FM (COLT) 7-38F5 1/4	1 thru 2	0
158 00	TYPE EQUIPMENT: DIESEL ENGINE SYSTEM/USE: EMERGENCY GENERATOR EQUIPMENT MODEL: FM (COLT) 8-38D8 1/8 HISHOCK	1 thru 2	0
159 00	TYPE EQUIPMENT: DIESEL ENGINE SYSTEM/USE: EMERGENCY GENERATOR EQUIPMENT MODEL: GM 6-71	1 thru 2	0
160 00	TYPE EQUIPMENT: DIESEL ENGINE SYSTEM/USE: EMERGENCY GENERATOR EQUIPMENT MODEL: GM 12V71RC	1 thru 2	0

WP Number	Title	Total Number of Pages	Change No.
161 00	TYPE EQUIPMENT: DIESEL ENGINE SYSTEM/USE: EMERGENCY GENERATOR EQUIPMENT MODEL: GM 16-645E5	1 thru 2	0
162 00	TYPE EQUIPMENT: DIESEL ENGINE SYSTEM/USE: EMERGENCY GENERATOR EQUIPMENT MODEL: HERCULES 6-DFXD	1 thru 2	0
163 00	TYPE EQUIPMENT: DIESEL ENGINE SYSTEM/USE: EMERGENCY GENERATOR EQUIPMENT MODEL: SUPERIOR GDB8	1 thru 2	0
164 00	TYPE EQUIPMENT: GEARS SYSTEM/USE: REDUCTION GEARS EQUIPMENT MODEL: FARRELL	1 thru 2	0
165 00	TYPE EQUIPMENT: GEARS SYSTEM/USE: REDUCTION GEARS EQUIPMENT MODEL: G.E.	1 thru 2	0
166 00	TYPE EQUIPMENT: GEARS SYSTEM/USE: REDUCTION GEARS EQUIPMENT MODEL: WESTERN GEAR	1 thru 2	0
167 00	TYPE EQUIPMENT: GEARS SYSTEM/USE: REDUCTION GEARS EQUIPMENT MODEL: WESTINGHOUSE	1 thru 2	0
168 00	TYPE EQUIPMENT: GEARS SYSTEM/USE: TRANSMISSION EQUIPMENT MODEL: WESTERN GEAR 1100	1 thru 2	0
169 00	TYPE EQUIPMENT: AIR COMPRESSOR SYSTEM/USE: STARTING EQUIPMENT MODEL: SAC FOR DETROIT DIESEL (GM) 16V-149 TI	1 thru 2	0
170 00	TYPE EQUIPMENT: AIR COMPRESSOR SYSTEM/USE: HIGH PRESSURE EQUIPMENT MODEL: INGERSOLL RAND	1 thru 2	0
171 00	TYPE EQUIPMENT: AIR COMPRESSOR SYSTEM/USE: HIGH PRESSURE EQUIPMENT MODEL: WORTHINGTON	1 thru 2	0
172 00	TYPE EQUIPMENT: AIR COMPRESSOR SYSTEM/USE: INTERMEDIATE AND LOW PRESSURE EQUIPMENT MODEL: INGERSOLL RAND NS100NL	1 thru 2	0
173 00	TYPE EQUIPMENT: AIR CONDITIONING COMPRESSOR SYSTEM/USE: CHILLED WATER EQUIPMENT MODEL: R12	1 thru 2	0
174 00	TYPE EQUIPMENT: AIR CONDITIONING COMPRESSOR SYSTEM/USE: CHILLED WATER EQUIPMENT MODEL: R11	1 thru 2	0

WP Number	Title	Total Number of Pages	Change No.
175 00	TYPE EQUIPMENT: AIR CONDITIONING COMPRESSOR SYSTEM/USE: CHILLED WATER EQUIPMENT MODEL: R114	1 thru 2	0
176 00	TYPE EQUIPMENT: REFRIGERATION SYSTEMS SYSTEM/USE: DIRECT EXPANSION EQUIPMENT MODEL: R12	1 thru 2	0
177 00	TYPE EQUIPMENT: BEARINGS SYSTEM/USE: LINE SHAFT EQUIPMENT MODEL: SPRING BEARING	1 thru 2	0
178 00	TYPE EQUIPMENT: AIR SUPPLY SYSTEM SYSTEM/USE: FORCED DRAFT BLOWER EQUIPMENT MODEL: HARDY TYNES	1 thru 2	0
179 00	TYPE EQUIPMENT: AIR SUPPLY SYSTEM SYSTEM/USE: FORCED DRAFT BLOWER EQUIPMENT MODEL: WESTINGHOUSE	1 thru 2	0
180 00	SYSTEM: Anchor Windlass (Engine) LUBRICANT: Lubricant: MIL-PRF-9000 (MS 9250)	1 thru 2	0
181 00	SYSTEM: Anchor Windlass (Hydraulic) LUBRICANT: MIL-PRF-17672 (2110TH)	1 thru 2	0
182 00	SYSTEM: Anchor Windlass (Hydraulic) LUBRICANT: MIL-PRF-17672 (2135TH)	1 thru 2	0
183 00	SYSTEM: Ballast System (Hydraulic) LUBRICANT: MIL-PRF-17672 (2075/2110, 2135)	1 thru 2	0
184 00	SYSTEM: Capstan (Hydraulic) LUBRICANT: MIL-PRF-17672	1 thru 2	0
185 00	SYSTEM: Central Hydraulics (Hydraulic) LUBRICANT: MIL-PRF-17672 (2135TH)	1 thru 2	0
186 00	SYSTEM: CPP/CRP (Hydraulic) LUBRICANT: MIL-PRF-17331 (2190 TEP)	1 thru 2	0
187 00	SYSTEM: CPP/CRP (Hydraulic) LUBRICANT: MIL-PRF-9000 (MS 9250)	1 thru 2	0
188 00	SYSTEM: Crane (Hydraulic) LUBRICANT: MIL-PRF-17672 (2135TH)	1 thru 2	0
189 00	SYSTEM: Crane (Hydraulic) LUBRICANT: MIL-DTL-17111	1 thru 2	0
190 00	SYSTEM: Elevator (Hydraulic) LUBRICANT: MIL-PRF-17672 (2135TH)	1 thru 2	0
191 00	SYSTEM: Elevator (Hydraulic) LUBRICANT: MIL-PRF-19457	1 thru 2	0

WP Number	Title	Total Number of Pages	Change No.
192 00	SYSTEM: Steering Gear (Hydraulic) LUBRICANT: MIL-PRF-17672 (2135TH)	1 thru 2	0
193 00	SYSTEM: Stern Gate (Hydraulic) LUBRICANT: MIL-PRF-17672 (2110TH)	1 thru 2	0

NAVAL AIR SYSTEMS COMMAND TECHNICAL MANUAL PROGRAM
LIST OF TECHNICAL PUBLICATIONS DEFICIENCY REPORTS INCORPORATED

1. The TPDRs listed below have been incorporated in this issue.

Activity	Report Control Number	Location
none		

INTRODUCTION

1. Purpose. Volume IV presents the methodology for evaluating analyses of samples from non-aeronautical equipment. The methodology enables an evaluator to identify wear metals present in the sample and their probable sources, to judge equipment condition, and to make recommendations, which influence maintenance and operational decisions. Following these recommendations can enhance safety and equipment reliability and contribute to more effective and economic maintenance practices. Test procedures are contained in Volume II.

2. Applicability. The provisions of this manual apply to all activities of the Departments of the Army, Navy, and the Air Force participating in the Joint Analysis Program (JOAP) and analyzing non-aeronautical samples. They also apply to the laboratories operating under contract or mutual assistance agreements therewith.

3. Manual Change Procedures. Detailed procedures for manual changes are contained in Volume I.

This Page Intentionally Left Blank

NON-AERONAUTICAL EQUIPMENT ANALYTICAL METHODOLOGY

Table of Contents

	Page
1. GENERAL	1
2. WEAR METAL SOURCES	2
3. LUBRICANT AND HYDRAULIC FLUID INFORMATION	3
4. LUBRICANT DEGRADATION	7
5. EQUIPMENT ANALYSIS REQUIREMENTS	8
6. EVALUATION PROCEDURE	13

1. General.

a. Each moving part in a machine has a normal rate of wear. As machine components wear, microscopic metallic wear particles are generated. Some microscopic particles are small enough to pass through a filter and remain suspended in the lubricating oil. When a machine is operating normally and operated under normal conditions, the concentration of these wear particles will be fairly consistent at the end of each oil change period. However, differences in load and working environment will affect the rate of wear of the machine components, as will various internal oil system problems and component friction changes. When abnormal wear takes place in the equipment, the concentration of one or more elements will increase significantly. Therefore, the concentration of wear particles will not always be the same and the evaluator must interpret the results of oil sample analysis to determine the reason for the changes detected and the possible effects of these changes on the equipment.

b. The JOAP non-aeronautical analytical methodology encompasses the interpretation of used oil sample analysis results, assessment of equipment and oil condition based on analysis results, diagnosis of the probable sources of wear metals and contaminants, and the issuance of accurate and effective equipment maintenance and operational recommendations to the operating activity. The methodology uses wear metal evaluation criteria tables by type equipment and individual equipment diagrams (JOAP Volume IV, WP 004 00 through WP 097 00 and Volume IV, WP 099 00 through 184 00) as well as subjective evaluation of a series of laboratory tests.

(1) The wear metal evaluation criteria tables provide the wear metal range and trend values which relate the oil sample wear metal concentration to the expected condition of the equipment or oil condition. These tables also contain supplemental technical information to assist the evaluator in identifying the most probable sources of wear metal. For some equipment, the criteria have not been determined but will be added when available. Data provided in these tables are intended for use as guidelines by evaluators, not as strict go/no-go criteria. The guidelines were statistically derived using analysis of samples from operating equipment from various geography locations. Absolute values that will indicate specific impending component failures may actually be somewhat above or below the concentration levels shown. Therefore, the evaluator must apply subjective judgment, experience, and knowledge of the particular component from which a sample is taken to determine evaluation recommendations.

(2) The individual equipment diagrams present wear metals source information keyed to location by the use of equipment cutaway schematics. The cutaway or cross sectional figures for the equipment provide detailed breakout information of metallic elements present in the equipment. In some instances, the figures identify elements that will not be detected by the spectrometer. These elements are shown for evaluator information only, with the possibility that they may be detected by other laboratory methods. In cases where the major element for a component is known, it is indicated by being shown first and underscored. Generally, the combinations of elements shown are listed in descending order of the amounts present in the components.

NOTE

The Engine/Transmission/Equipment Cross Index listing in JOAP Volume IV, WP 004 00 through WP 097 00 includes a cross index for non-aeronautical equipment items. The end items shown in the appendix for a particular engine or transmission may not be the only equipment which utilize that particular engine/transmission.

2. Wear Metal Sources.

a. Internal combustion engines are subject to contamination from external sources such as sand and dirt, as well as internal sources, such as blow-by combustion contaminants and wear metals from various oil-wetted moving parts, which are deposited in the oil system in varying degrees, depending upon the equipment condition.

b. Transmissions are difficult to evaluate and may be relatively easily contaminated with dirt, sand, and water. Transmissions may reveal high increases in debris (both metals and nonmetals) without detrimental wear of the oil-wetted working components. Therefore, the evaluator should be familiar with the transmissions being evaluated and also with any factors that might cause extreme or sudden increases in transmission oil contamination.

c. The specific metals that may normally be found in diesel engines and transmissions of non-aeronautical equipment used by the military services are discussed below:

(1) Iron (Fe). Iron is one of the most common wear metals found in oil samples. Iron may be generated from the wear of cylinder walls, shafts, gears, rolling element bearings, splines, and numerous other engine or transmission parts. Iron may also be the result of machining chips or debris left in the equipment oil system during manufacture or overhaul. Iron may also be present as a result of rust in some equipment.

(2) Silver (Ag). Silver is used as plating on some oil seals and bushings and may also be found in small amounts in some sleeve bushings.

(3) Aluminum (Al). Aluminum may be found in the oil systems of engines and transmissions because of the wear of pistons, washers, shims, some oil pumps, torque convectors, housings or cases, etc. It may also be the result of machining chips or debris left in the equipment oil system during manufacture or overhaul.

(4) Chromium (Cr). Chromium in the oil system may result from the wear of numerous oil-wetted parts that are alloyed or plated with chromium. The most common occurrence will probably result from wear of chromium plated piston rings.

(5) Copper (Cu). Copper is found in connecting rod and main bearings, many bushings, thrust washers and piston pin bearings. Also, many transmission and brake plates contain sintered bronze, which is very high in copper content.

(6) Silicon (Si). Although not a metallic element, silicon is commonly present in many oil systems and may be detected by spectrometric testing. The main source of silicon in engines (silica) is from external sources through the air induction system, which may admit significant amounts of dirt or sand if not maintained properly. Silicon may also be introduced in the form of dirt or sand during maintenance if proper maintenance practices are not observed. Aluminum and cast iron parts used in both engines and transmissions have significant amount of silicon. Some seals and gaskets, as well as antifoaming agents in oils, also contain silicon and/or silicone.

(7) Tin (Sn). Tin is used to plate some engine pistons and may also be present in connecting rod and main bearings, many bushings, thrust washers and piston pin bearings.

(8) Nickel (Ni). Nickel is used for plating and as an alloying element in many oil-wetted components. Some cast irons and stainless steels contain significant amounts of nickel.

(9) Lead (Pb). Lead is used for plating and may be found in significant amounts in connecting rod and main bearings, bushings, thrust washers and piston pin bearings. Lead may also be found in transmission clutch and brake friction plates.

(10) Molybdenum (Mo). Molybdenum is used as an alloying element in many oil-wetted engine and transmission components. Molybdenum is also used as a coating on the top, second, and third compression rings in the Continental AVDS 1790 engines and on the top ring of the Caterpillar 3208 engines.

(11) Magnesium (Mg). Magnesium is used as an alloying element in some oil-wetted components but is not employed extensively for non-aeronautical vehicles where weight is a less significant factor.

3. Lubricant and Hydraulic Fluid Information.

a. Specifications. Military specifications for lubricants and hydraulic fluids are frequently published in a format which includes sections describing the intended use of the oil/fluid, referenced documents, lubricant/fluid property requirements, level of performance, quality assurance provisions, test procedures for determination of properties, packaging and marking instructions, and qualification procedures. A specific military agency is responsible for the qualification of oils/fluids to each specification. The agency determines, from in-house or commercial laboratory evaluation data that products submitted for qualification meet all specification requirements. Periodically, an updated qualified products lists (QPL) is published for each specification giving the government designation (if any) for the lubricant, the manufacturer's designation for the lubricant/fluid, a test or qualification reference number/fluid, and the manufacturer's name and address.

b. Military and NATO Symbols. Lubricating engine and gear oils and hydraulic fluids are generally identified by military symbols and, in some instances, NATO Code Number designations. To provide a ready reference for specification products, Table 1 lists military lubricant and hydraulic fluid specifications with their respective grade and military and NATO designations.

c. Within the confines of this discussion, a lubricant serves the following functions.

(1) Provides a film to reduce friction between rolling and sliding hardware components, i.e., roller and ball bearings and races, sleeve bearings and shaft surfaces, piston rings and cylinder liners, etc. Adequate lubricant film strength under extreme pressures and temperatures assures minimum metal-to-metal scuffing, scoring, and reduced overall wear.

(2) Provides a medium to transfer heat caused by friction from critical working surfaces.

(3) Acts as a flushing liquid to carry away wear particles and other foreign material.

(4) Contains additives which:

(a) Suspend combustion blow-by products and debris in the oil.

(b) Provide a sealing medium in piston engines.

(c) Maintain the cleanliness of critical component surfaces.

(d) Chemically react with power-system produced contaminates to neutralize their adverse effects.

d. Additives.

(1) Additives are normally classified as detergents, dispersants, oxidation inhibitors, corrosion inhibitors, anti-wear agents, pour point depressants, or anti-foam agents.

TABLE 1. Military Lubricant and Hydraulic Fluid Symbols and NATO Code Numbers

Product	Specification	Grade	Symbols	
			Military *	NATO
Hydraulic fluid, petroleum base, aircraft, missile, and ordinance	MIL-PRF-5606	----	OHA	H-515
Hydraulic fluid, petroleum base, preservation and operation	MIL- PRF-6083	----	OHT	C-635
Hydraulic fluid, fire resistant, non-neurotoxic	MIL-H-19457	----	----	H-580
Hydraulic fluid, catapult	MIL-H-22072	----	----	H-579
Hydraulic fluid, rust inhibited, fire resistant, synthetic hydrocarbon base	MIL-H-46170 (Type I-ground) (Type II- aerospace test stands)	----	FRH	H-544
Lubricating oil, internal combustion engine, tactical service	MIL-PRF-2104	10 30 40 15W/40	OE/HDO-10 OE/HDO-30 OE/HDO-40 OE/HDO-15/40	0-237 0-238 ---- 0-1230
Lubricating oil, gear, multi-purpose	MIL-PRF-2105	75W 80W/90 80/140	GO-75 GO-80/90 GO-85-140	0-186 0-226 0-228
Lubricating oil, aircraft turbine engines, synthetic base	MIL-PRF-7808	----	----	0-148
Lubricating oil, shipboard internal combustion engine, high out-put diesel	MIL-PRF-9000	----	9250	0-278
Lubricating oil, steam turbine and gear, moderate service	MIL-PRF-17331	----	2190 TEP	0-250
Hydraulic fluid petroleum, inhibited	MIL-PRF-17672	----	2075TH 2110TH 2135TH	---- H-573 ----
Lubricating oil, internal combustion engine, preservative and break-in	MIL-PRF-21260	10(Type I) 30(Type I) 50(Type 1)	PE-10-1 PE-30-1 PE-50-2	C-640 C-642 C-644

TABLE 1. Military Lubricant and Hydraulic Fluid Symbols and NATO Code Numbers - Continued

Product	Specification	Grade	Symbols	
			Military *	NATO
Lubricating oil, aircraft turbine engine, synthetic base	MIL-L-23699	----	----	0-156
Lubricating oil, internal combustion engine, administrative service	MIL-L-46152	10W 30 5W/30 10W/30 15W/40	---- ---- ---- ---- ----	---- ---- ---- ---- ----
Lubricating oil, internal combustion engine arctic	MIL-L-46167	5W/20	OEA	0-183
Hydraulic fluid, fire resistant, synthetic hydrocarbon base, aircraft	MIL-H-83282	----	----	H-537
Lubricating oil, refrigerant compressor, uninhibited	FED SPEC VVL-825	----	RC0II RC0IV	0-283

NOTE:
* FRH: fire resistant hydraulic
GO: gear oil
OEA: oil, engine arctic
OE/HDO: oil, engine/heavy duty operation
OHA: oil, hydraulic aircraft
OHT: oil, hydraulic testing
PE: preservative, engine
RCO: refrigerant, compressor oil
TEP: turbine extreme pressure
TH: turbine hydraulic

NOTE

Commercially available automotive oil additives should not be used as supplements for military specification oils since the additives may be incompatible and may result in a partial or complete loss of vital oil characteristics. Problems such as increased pour points, foaming tendencies, bearing wear, engine corrosion, and piston ring deposits have been identified with additive misapplications, which have resulted in equipment malfunction and damage.

(2) Each type of lubricant is formulated to meet a specific function and set of operating conditions. The quality of the lubricant base stock and the intended application will dictate the need for a particular additive type. Table 2 lists the various types of additives, which may be used, corresponding chemical compound types and those chemical elements detectable by spectrometric analysis. Since numerous chemical compounds may be used within each additive class, only general descriptions of additive compositions can be given. In many cases, determination of the presence or absence of a specific additive can only be made through chemical analysis. This is especially true if the additive is an organic compound and contains no unique chemical elements other than the more common elements of carbon, hydrogen, oxygen, and nitrogen.

NOTE

Lubricant manufactures frequently use additives, which may be misinterpreted as wear metals during spectrometric analysis. An example of this is the use of copper as and anti-oxidant.

TABLE 2. Lubricant Additives

Additive Type	Chemical Type	Elements Detectable by Spectrometric Analysis
Antioxidant	Organic	None
	Metallo-organic	Zn, Cu
Detergent	Metallo-organic	B, Ba, Mg, Na
Dispersant	Organic	None
Load-carrying	Organic	None
	Metallo-organic	Zn
Corrosion inhibitor	Organic	None
	Metallo-organic	Zn
VI improver	Organic	None
Anti-foam	Organic-silicone	Si
Pour point depressant	Organic	None

4. Lubricant Degradation.

a. Causes. Three basic factors control lubricant degradation: service time, operating temperature, and contamination. Time and temperature are directly related. The useful life of a lubricant is extended when equipment is operated at moderate operating temperatures and it is reduced when equipment is operated at severe operating temperatures such as sustained engine operation at high loads or continuous operation with high-sulfur fuel.

b. Effects. Breakdown of a formulated lubricant may be associated with oxidative deterioration of the base stock or depletion or modification of a particular additive. Oxidative deterioration results in the formation of acids, which promote corrosion and organic products. These products increase the viscosity of the oil. The effect of a significant increase in viscosity is a reduction in the pumpability of the lubricant and the amount of lubricant flow through delivery jets and ports. This reduces the lubricant ability to reduce friction, transfer heat, flush contaminants, and maintain component cleanliness. Products resulting from oxidative deterioration may also promote the formation of deposits, which can interfere with the operation of mechanical components and plug oil filters and jets. Additive depletion results in the reduction of loss of the lubricant property which the additive was intended to provide such as detergency, dispersany, and lubricating ability.

c. Contamination. Lubricant contamination may occur as a consequence of faulty maintenance practices, poor handling techniques with new replacement oil, system-ingested contaminants, or system-generated contaminants.

(1) System Ingested. In internal combustion engines, the main ingested contamination is dirt and/or sand, which causes abrasive wear of mechanical components. The introduction of such contamination is usually caused by a malfunction in the engine air induction system (damaged air filter, air hoses, etc.). This type of contamination will normally be detected as high silicon during spectrometric analysis of system oil samples.

(2) System Generated. Several types of system-generated contaminants may occur. Examples include antifreeze fluid, water, unburned fuel, and various products of combustion (blow-by products), which enter the lubricant crankcase through the piston ring area. Wear metals may also be considered a special type of system-generated contaminant. The presence (or absence) of wear metals is an indication of the integrity and condition of the oil-wetted mechanical system. If wear particles of appreciable size are generated, damage to mating surfaces such as gears and bearings may occur.

(3) Contaminant Types. Table 3 lists the various types of lubricant contaminants, which may be found, the significance of the contamination and the corresponding analytical methods for contaminant detection.

5. Equipment Analysis Requirements.

a. Engines. As a minimum, all Army and Marine engine samples shall be evaluated by four screening test procedures: spectrometric analysis, viscosity, blotter spot test and test for water. If the results obtained for any screening test are outside the evaluation guidelines, the laboratory evaluator shall consider the nature and degree of the failing result and schedule additional testing as required. See Table 4 for testing requirements. See Volume IV, WP 101 00 through 184 00 for Navy Ship requirements. A recommendation for maintenance action should not be made until a resample has been requested to verify the suspected situation.

(1) Spectrometric values which exceed guidelines listed on applicable criteria tables should be evaluated to determine whether a critical situation exists and the appropriate laboratory recommendation should be assigned. For example, a verification sample that confirms excessive wear metal concentrations is considered a critical situation and warrants a recommendation for maintenance action. But an increasing wear trend on a routine sample is not considered a critical situation; it warrants a recommendation for resampling.

TABLE 3. Lubricant Contaminants

Contaminant Type	Significance	Analytical Method
Wear metals	System wear	Spectrometer
Coolant	Emulsifies oil, impairs lubrication, destroys dispersant additives	Crackle test; blotter spot; spectro for Na, B
Free water	Corrosion, emulsifies oil, impairs lubrication	Crackle test; blotter spot; spectro for Na with Marine equipment, visual inspection
Fuel	Lowers oil viscosity	Viscosity; Alkalinity Test
Dirt, sand	Causes abrasive wear	Spectro for Si, Al; blotter spot; visual inspection
Blow-by products, soot	Increases viscosity, forms sludge	Viscosity; blotter spot
Reactive compounds	Corrosion, viscosity increase	Viscosity; Alkalinity Test
Rust	Internal corrosion	Spectro for Fe

NOTE

A request for a sample of the new oil from stock is desirable whenever an increase in an element is suspected to be the result of additives from an oil addition.

Spectrometric results should also be evaluated for foreign contamination such as ingested dirt, evidenced by high silicon or aluminum, or engine coolant leakage, evidence by increases in sodium and boron. Additive levels may be shown by spectrometric data for elements such as zinc, boron, magnesium, or sodium.

(2) Viscosity guidelines for MIL-L-2104, the oil most commonly used in the Nametre viscometer. Viscosity results below minimum guidelines indicate the sample should be tested for fuel dilution. Viscosity results above maximum guidelines indicate the sample should be tested for total contaminants by blotter test and for water by crackle or Karl Fischer. Alkalinity should also be checked because low alkalinity means acids are being produced which are depleting the alkaline additives in the oil. These acids can form products which increase the viscosity. Viscosities for oils other than MIL-L-2104 should be evaluated by comparing the viscosity of the used oil sample to the viscosity of a sample of the new oil.

TABLE 4. Non-Aeronautical Equipment Lubricant Sample Analysis Requirement Guide

The sequence of the following tests is provided as a guide, not as mandatory requirements for all services.

I. ENGINES.

A. Spectrometric.

1. Pass - Go to I.B.
2. Fail - See wear metal guidelines for specific equipment.
   a. Critical - Resample to verify.
      (1) Wear Metals – abnormal or high range.
      (2) Oil contamination by dirt or dust - Si increase.
   b. Noncritical - Resample to verify, then change oil.
      (1) Oil contamination by dirt or dust - Si increase.
      (2) Additive depletion - Zn, Mg, or Cu decrease.
      (3) Coolant problem - B or Na increase by 20 PPM or more.

B. Viscosity.

1. Pass - Go to I.C.
2. Fail - See viscosity guidelines.
   a. Low - Fuel dilution or wrong oil. Verify by flashpoint test and change oil. If repeat problem, make maintenance recommendation for fuel dilution.
   b. High - Soot, sludge, water or wrong oil. Verify by blotter and water tests and change oil.

C. Blotter.

1. Pass - Go to I.D. or I.E.
2. Fail - See blotter test instructions in Volume II, work package 012 00.
   a. Contaminated oil - Soot or water is present. Verify by water (crackle or KF) test and change oil.
   b. Additive depletion - Spot has poor dispersancy. Verify by spectrometric Analysis (large decrease in Zn, Mg, or Cu) and change oil.

D. Crackle Test for Water.

1. Pass - Go to I.E. if quantitative degree of water content required (optional).

TABLE 4. Non-Aeronautical Equipment Lubricant Sample Analysis Requirement Guide - Continued

2. Fail - See crackle test instructions in Volume II, work package 008 00.
    a. Free water - Change oil.
    b. Coolant leak - Verify by spectrometric (B or Na increase by 20 PPM or more) and change oil.
    c. Dissolved water - Verify by KF test and consult guidelines.

E. Karl Fischer Test for Water.
1. Pass.
2. Fail - See guidelines, Volume II, work package 009 00.

F. Fourier Transform Infrared (FT-IR) Spectrometric Analysis Results.
1. Pass.
2. Fail - See FT-IR method number guidelines and analysis test warnings.
    a. Contaminated oil - Soot or water present.
    b. Water exceeds guidelines - change oil and service or replace filter.
    c. Fuel or coolant exceeds guidelines recommending corrective action. If fault is corrected, then perform oil change and service or replace filter.
    d. Additive depletion or lubricant degradation change oil and service or replace filter.

II. TRANSMISSIONS.

A. Spectrometric.
1. Pass - Go to II.B.
2. Fail - See wear metal guidelines for specific equipment.
    a. Critical - Resample to verify.
        (1) Wear metals - abnormal to high range.
        (2) Oil contamination by dirt or dust - Si increase.
    b. Noncritical - Resample to verify, then change oil.
        (1) Oil contamination by dirt or dust - Si increase.
        (2) Additive depletion - Zn, Mg, or Cu decrease.

TABLE 4. Non-Aeronautical Equipment Lubricant Sample Analysis Requirement Guide - Continued

(3) Water or moisture condensation - Na increase.

B. Viscosity.

1. Pass - Go to II.C.
2. Fail - See viscosity guidelines.
   a. Low - Wrong oil, change oil.
   b. High - Sludge, water or wrong oil. Verify by water test and change oil.

C. Water Test - Crackle or Karl Fischer.

1. Pass.
2. Fail - See guidelines, Volume II, work package 008 00.

D. Fourier Transform Infrared (FT-IR) Spectrometric Analysis Results.

1. Pass.
2. Fail - water, oxidation, Ethylene Glycol, Anti-wear Region 1, Anti-wear Region 2 and Water Readings. Change oil and service or replace filter.

III. HYDRAULIC SYSTEMS.

The following tests are approved methods of testing hydraulic fluid condition and may be directed by services as required. These tests may be performed singly or in combination as required. (Army laboratories shall use spectrometric, viscosity, and water testing as a minimum.)

A. Spectrometric.

B. Viscosity.

C. Water testing, Crackle or Karl Fischer Method.

D. Electronic Particulate Count.

E. Colorimetric Patch Testing.

F. Fourier Transform Infrared (FT-IR) Spectrometric Analysis Results.

1. Pass.
2. Fail - Change oil and service or replace filter.

(3) Blotter spot test results reflect the presence or absence of total contaminants, dispersancy additives, and coolant in the oil. Evidence of solids and coolant contamination can be confirmed by reviewing spectrometric results for silicon (for dirt) and sodium and boron (for coolant). The presence of either solids or coolant contamination or the absence of dispersant additives warrants a recommendation to change oil.

(4) Crackle tests result indicate the presence or absence of water. If the test is positive, the blotter spot test should be reviewed for dispersancy because the presence of either free water or coolant will reduce the dispersancy. Review of spectrometric data described above will indicate if the positive test result is caused by coolant.

(5) FT-IR spectrometer tests transmission servicing oils for additive depletion and the presence of contaminants such as soot, fuel, water, coolant (Ethylene Glycol), oxidation, oil additives, or incorrect oil addition. The presence of contaminants or additive depletion warrants a lab recommendation to change oil and service or replace the component filter. If the presence or fuel or coolant is confirmed by a resample, then the AOAP laboratory will issue a DA Form 3254-R, Oil Analysis Recommendation and Feedback, for corrective action.

b. Transmissions. Transmission samples should be evaluated by the screening tests of spectrometric analysis, viscosity, and water determination.

(1) Spectrometric results that exceed criteria shall be evaluated by the screening tests of spectrometric analysis, viscosity, and water determination.

(2) Viscosity values which fail guidelines, either high or low, shall be cause for a laboratory recommendation to change oil.

(3) A crackle test indication of water in the oil shall be cause for a laboratory recommendation to change oil.

(4) FT-IR spectrometer test for presence of contaminants or absence and additives in components servicing oil the following applies. When established guidelines are exceeded, the recommendation will be to change oil and service/replace filter.

c. Hydraulic System. Samples shall be evaluated by spectrometric analysis viscosity, water testing, electronic particulate count, or colormetric patch testing. (Army samples shall have spectrometric, viscosity, water, and FT-IR testing as a minimum.) Laboratory recommendations for hydraulic systems shall be limited to normal or to change fluid.

6. Evaluation Procedure. The following procedure shall be used when evaluating sample results:

a. Determine the range for each critical wear metal concentration in the sample result from the appropriate equipment wear metal evaluation criteria table in JOAP Volume IV, WP 004 00 through WP 097 00.

Wear metals considered significant, and for which oil analysis monitoring is required for the particular equipment, are those for which numerical criteria are provided in the applicable equipment criteria table.

b. Review the technical information section included on each criteria table for additional information to be used in the evaluation process.

c. Compare the wear metal concentration levels of the current sample with the levels of the previous sample to determine whether changes are occurring which indicate developing or impending equipment problems. Analysis readings will normally vary between samples and are generally related to equipment operating time since oil change.

TABLE 5. Nametre Viscometer Viscosity Guidelines for Mil-L-2104 Lubricating Oil

Nametre (N_m) Units: Centipoise x g/cm^3

Temp °F	Grade 10		Grade 30		Grade 50*		Grade 15W-40	
	N_m Min	N_m Max	N_m Min	N_m Max	N_m Min	N_m Max	N_m Min	N_m Max
65	108	307	124	349	296	845	141	344
66	105	299	121	341	289	824	136	333
67	103	292	119	333	282	803	133	321
68	100	284	116	325	276	783	129	311
69	98	277	114	318	270	764	125	300
70	96	270	112	311	263	745	121	290
71	94	263	109	304	257	726	118	281
72	91	256	107	297	251	708	115	272
73	89	250	105	290	245	691	111	263
74	87	244	102	283	240	673	108	254
75	85	238	100	277	234	657	105	246
76	83	232	98	271	229	640	103	238
77	81	226	96	264	223	624	100	231
78	79	220	94	258	218	609	97	224
79	77	214	92	253	213	594	94	217
80	75	209	90	247	208	579	92	210
81	74	204	88	241	203	565	89	204
82	72	199	86	236	198	551	87	197
83	70	194	84	230	194	537	85	191
84	69	189	83	225	189	524	83	186
85	67	184	81	220	185	511	81	180
86	65	179	79	215	181	498	78	175
87	64	175	78	210	176	486	76	170
88	62	170	76	205	172	473	75	165
89	61	166	74	201	168	462	73	160
90	60	162	73	196	164	450	71	155
91	58	158	71	192	161	439	69	151
92	57	154	70	187	157	428	67	147
93	55	150	68	183	153	418	66	143
94	54	146	67	179	150	407	64	138
95	53	142	65	175	146	397	63	135
96	52	139	64	171	143	387	61	131
97	50	135	63	167	139	378	60	127
98	49	132	61	163	136	368	58	124
99	48	128	60	159	133	359	57	120
100	47	125	59	156	130	350	56	117

NOTE:* Grade 50 oil is being phased out of the DoD inventory and is being replaced with Grade 15W-40.

TABLE 6. Viscosity Guidelines for MIL-L-9000 and MIL-L-2104 Oils at 100 °F

				ALLOWABLE USE LIMITS AT 100 °F
Oil Specification	**Nametry Units (Nm)**		**Centistokes (cSt)**	
	Min	**Max**	**Min**	**Max**
MIL-L-9000	81	183	100	225
MIL-L-2104:				
Grade 10	47	125	58	154
Grade 30	59	156	73	192
Grade 50	130	350	160	430
Grade 15W4	56	117	69	144

d. Determine the wear metal trend between the last sample and the current sample and compare with the trend limit listed in the criteria table. Most abnormal trends are usually readily apparent. The trends in the table are based on the wear metal between samples will not be exactly the specified hours; therefore, a conversion must be made for approximate trend value comparison purposes. A trend comparison can be made by dividing the wear metal increases between samples by the operating hours between samples and then multiplying the results by 10. Trend values for the specified sample intervals are calculated as follows:

$$\frac{A-B}{C-D} \times 10 = \text{trend value for 10 hours}$$

A = PPM this sample

B = PPM last sample

C = operating hours this sample

D = operating hours last sample

NOTE

The formula shown above for calculating trends is a quick way to determine the trend values. However, trend values calculated using this formula for samples taken very frequently may be much less accurate or reliable than trend values calculated for samples taken less frequently. This possibility of error is caused by the spectrometer allowable tolerances and also by the possibility of a variance in the rate of wear metal production over a period of time. The calculated trend values will be helpful information for the evaluation process, but if samples taken more frequently than at 10 hour intervals are being evaluated, the calculated trend values are not considered accurate for use as equipment acceptable/not acceptable criteria.

TABLE 7. Conversion Tables Nametry Units to Centistokes for MIL-L-9000, MIL-L-2104, and MII-L-46152 Oils

Nm	cSt	Nm	cSt	Nm	cSt	Nm	cSt	Nm	cSt
47	58	95	117	143	176	191	235	239	294
48	59	96	118	144	177	192	236	240	295
49	60	97	119	145	178	193	237	250	308
50	62	98	121	146	180	194	239	275	338
51	63	99	122	147	181	195	240	300	369
52	64	100	123	148	182	196	241	320	400
53	65	101	124	149	183	197	242	350	431
54	67	102	125	150	185	198	244		
55	68	103	127	151	186	199	245		
56	69	104	128	152	187	200	246		
57	70	105	129	153	188	201	247		
58	72	106	130	154	189	202	248		
59	73	107	132	155	191	203	250		
60	74	108	133	156	192	204	251		
61	75	109	134	157	193	205	252		
62	77	110	135	158	194	206	253		
63	78	111	137	159	196	207	255		
64	79	112	138	160	197	208	256		
65	80	113	139	161	198	209	257		
66	81	114	140	162	199	210	258		
67	83	115	141	163	200	211	260		
68	84	116	143	164	202	212	261		
69	85	117	144	165	203	213	262		
70	86	118	145	166	204	214	263		
71	88	119	146	167	205	215	264		
72	89	120	148	168	207	216	266		
73	90	121	149	169	208	217	267		
74	91	122	150	170	209	218	268		
75	93	123	151	171	210	219	269		
76	94	124	153	172	212	220	271		
77	95	125	154	173	213	221	272		
78	96	126	155	174	214	222	273		
79	97	127	156	175	215	223	274		
80	98	128	157	176	216	224	276		
81	100	129	158	177	218	225	277		
82	101	130	160	178	219	226	278		
83	102	131	161	179	220	227	279		
84	103	132	162	180	221	228	280		
85	105	133	164	181	223	229	282		
86	106	134	165	182	224	230	283		

TABLE 7. Conversion Tables Nametry Units to Centistokes for MIL-L-9000, MIL-L-2104, and MII-L-46152 Oils – Continued									
Nm	cSt	Nm	cSt	Nm	cSt	Nm	cSt	Nm	cSt
87	107	135	166	183	225	231	284		
88	108	136	167	184	226	232	285		
89	109	137	169	185	228	233	287		
90	111	138	170	186	229	234	288		
91	112	139	171	187	230	235	289		
92	113	140	172	188	231	236	290		
93	114	141	173	189	232	237	292		
94	116	142	175	190	234	238	293		

e. Wear metal concentrations exceeding the guidelines but with normal trends may, in some cases, be acceptable, although samples may be required more frequently to minimize the possibility of missing an impending failure.

f. Trend values included in the evaluation criteria tables, are, as previously stated, intended as guidelines for the evaluator, since there are many other factors that must be evaluated to determine actual equipment condition and whether subsequent laboratory recommendations to the customer are required. Generally speaking, trends encountered will fall into one of the following categories:

(1) Level (little or no change): considered normal.

(2) Slightly to moderately increasing or decreasing within trend limits: Usually indicative of problems. A sudden increase may indicate the start of an equipment problem, while a sudden decrease may indicate defective sampling procedures, oil addition/change without documentation, or sample identification problems. Investigation for causes or requests for verification samples and/or decreased sampling interval may be appropriate.

(3) Sharply increasing or decreasing within trend limits: Usually indicative of problems. A sudden increase may indicate the start of an equipment problem, while a sudden decrease may indicate defective sampling procedures, oil addition/change without documentation, or sample identification problems. Investigation for causes or requests for verification samples and/or decreased sampling interval may be appropriate.

(4) Erratic increases and decreases of trend level: This usually indicates a problem in sampling procedure, oil addition or change without documentation, sample identification, etc. This should trigger a request to review activity sampling procedures and submit a verification sample.

(5) Increases exceeding trend limits: Generally indicative of equipment problems. Consult comment sections and equipment history. This will normally result in resample request and/or a maintenance action recommendation.

NOTE

The above categories are subjective since no definitive increase/decrease point value within the trend limits may be arbitrarily assigned. Severity of increase or decreases must be determined by each evaluator after considering all factors

involved. The above listing is not considered complete but is provided to show that trend variances, while still within limits, should be monitored to detect impending problems prior to development, whether action recommendations to operating activities are required or not.

g. Determine the appropriate recommendation to be made to the operating activity. Laboratory recommendation codes applicable to non-aeronautical equipment are contained in JOAP Volume I, WP 005 00. The majority of sample results will be normal, with the appropriate recommendation Code A. In most cases, this recommendation may be determined without extensive reference to the tables or charts. However, applicable tables and charts for the equipment being monitored should be consulted for any special guidance information.

h. If a recommendation for maintenance action is indicated, the comments sections and equipment diagrams should be reviewed. These may provide additional maintenance information concerning likely problem areas that may warrant inclusion in the laboratory recommendation/maintenance advisory notification to the operating activity.

i. The above procedure can serve as a step-by-step operational guide for evaluator personnel with limited experience, while retaining considerable flexibility for use by an experienced evaluator who can readily take into account the many factors which influence evaluations and recommendations. The judgment of the evaluator is an important part of the evaluation process. Judgment and experience shall not be subordinated by numerical data when reasonable doubt exists in the validity of the recommendation indicated by the numerical data.

‘

LABORATORY RECOMMENDATION CODES, NON-AERONAUTICAL EQUIPMENT (NOT FOR ARMY USE)

CODE	GENERAL LAB RECOMMENDATIONS
A	Sample results normal; continue routine sampling.
X	Analysis results supplied to customer; no recommendation required.
Z	Previous recommendation still applies.
CODE	**INSPECTION RECOMMENDATIONS (Requires Feedback)**
H**	Inspect unit and advise lab of finding. Abnormal wear indicated by (PPM) (element). Resample after (maintenance/*** hours/etc.)
K**	Impending failure, critical wear indicates by (element). Inspect unit and advise lab of findings. Resample after (maintenance/*** hours/etc.).
L**	Inspect brake and clutch plate adjustments, change oil service filters, resample after *** hours of operation.
M**	Perform engine coast-down check. If engine fails test, examine for discrepancy and advise lab of results; otherwise, resample after *** hours of operation.
U**	Cooling system leak indicated by (Mg/Cr/Na/B). Inspect unit and advise lab of findings. Resample after (maintenance/*** hours/etc.).
CODE	**OIL CHANGE RECOMMENDATIONS (Requires Resample)**
D	Change oil and service filters. Resample after *** hours of operation.
CODE	**LAB REQUESTED RESAMPLES (Requires Resample)**
B*	Resample as soon as possible; do not change oil.
C*	Resample after *** hours.
F*	Do not change oil. Submit sample after ground or test run. Do not operate until after receipt of laboratory result or advice.
G*	Contamination suspected. Do not change oil, resample unit and submit sample from new oil servicing this unit.
I*	Stop purification; resample each engine after 4 hours of operation.
N*	Unit 'wear-in' indicated; resample in accordance with break-in schedule or after *** hours.
P*	Do not operate; do not change oil; submit resample as soon as possible.
Q	Normal PPM was obtained from test cell run after complete P.E. where oil-lubricated parts were changed/removed/replaced. Monitor engine closely after installation to ensure a normal trend before release to routine sampling.

NOTES:
*Resample (red cap) required.
**Maintenance feedback required; advise laboratory of findings.
***Laboratory will specify time limit.

STANDARD LAB RECOMMENDATION CODES
PHYSICAL TEST RECOMMENDATIONS
(Not for Air Force Use)

CODE	GENERAL LAB RECOMMENDATIONS
AA	Oil condition normal, continue routine sampling.
DN	Do not operate.
ER	Evaluate and repair component.
TS	Check oil type and source.
XX	Analysis results supplied to customer; no recommendation required.
ZZ	Previous recommendation still applies.
CODE	**OIL CONDITION STATEMENTS**
FD	Fuel dilution.
NN	Neutralization or acid number.
PC	Particle count excessive.
PN	Precipitation number.
SA	Solid or abrasive material.
VS	Viscosity (high/low/change).
WA	Water.
CODE	**OIL CHANGE RECOMMENDATIONS**
CS	Change oil and service filter.
CP	Purify, renovate or change oil and service filters.
CODE	**LAB REQUESTED SAMPLES (Requires Resample)**
RB*	Resample as soon as possible.
RC*	Resample after *** hours.
RH*	Submit hot sample.
RI*	Resample; insufficient amount of sample received.
RS*	Submit sample of new oil servicing this unit.
CODE	**INSPECTION RECOMMENDATIONS (Requires Feedback)**
IA**	Inspect and repair air induction system.
IC**	Inspect and repair cooling system.
IF**	Inspect and repair fuel system; change/service filters oil.
IW**	Inspect for source of water.

NOTES:
*Resample (red cap) required.
**Maintenance feedback required; advise laboratory of findings.
***Laboratory will specify time limit.

COMPONENT: ALLIS-CHALMERS 3500 ENGINE

LUBRICANT: MIL-L-2104

	Fe	Ag	Al	Cr	Cu	Si	Sn	Ni	Pb	Mo	Mg
Normal Range	0-200	0-1	0-30	0-21	0-65	0-56	0-10		0-83		
Marginal Range	201-246		31-37	22-26	66-80	57-69	11-13		84-103		
High Range	247-307	2	38-47	27-32	81-100	70-86	14-16		104-128		
Abnormal	308+	3+	48+	33+	101+	87+	17+		129+		
Abnormal Trend (PPM Increase in 10 Hrs)	61	2	9	6	20	17	4		26		

TECHNICAL INFORMATION

APPLICABLE END ITEMS

KA60, 645M, TL645, MEP-006A, MEP-105A, MEP-115A

This Page Intentionally Left Blank

COMPONENT: AMERICAN 244F ENGINE

LUBRICANT:

	Fe	Ag	Al	Cr	Cu	Si	Sn	Ni	Pb	Mo	Mg
Normal Range	0-63		0-12	0-25	0-46	0-29			0-37		
Marginal Range	64-77		13-15	26-31	47-56	30-36			38-45		
High Range	78-97		16-18	32-39	57-70	37-45			46-56		
Abnormal	98+		19+	40+	71+	46+			57+		
Abnormal Trend (PPM Increase in 10 Hrs)	19		4	8	14	9			11		

TECHNICAL INFORMATION:

AVERAGE:	Fe=23	Mg=326	Sn=1
	Ag=1	Na=59	Ti=1
	Al=3	Ni=1	B=49
	Cr=6	Pb=8	Mo=1
	Cu=12	Si=11	Zn=587

APPLICABLE END ITEMS

LOCO 120T

This Page Intentionally Left Blank

COMPONENT: HMMWV 6.2 LITER ENGINE UPPER WEAR METAL LIMITS

These interim wear metal guidelines are based on the manufacturer's used lubrication oil chemical analysis. The Oil Analysis Standard Inter-service System (OASIS) software will be modified to reflect actual wear metal parameters.

Wear Metal/Coolant Elements		Limits (PPM)	Footnotes
Aluminum	(Al)	50	-
Boron	(B)	20	A,B
Chromium	(Cr)	45	-
Copper	(Cu)	400 (150)	A,B,D,E
Iron	(Fe)	500	A
Lead	(Pb)	115	A
Molybdenum	(Mo)	40	A,B
Silicon	(Si)	90	A,B,C
Sodium	(Na)	50	A,B
Tin	(Sn)	90	-

NOTES:

A. Values allowed over the component lubrication oils' baseline.
B. The elements may be present in servicing lubrication oil or coolant additive packages.
C. This value can be higher on a new engine or engine recently serviced due to silicone form-in-place gaskets being utilized.
D. Engine(s) used in application where extended idling is required may incur copper readings levels of 600 PPM or higher.
E. Lower value readings for 1985 year model engines because of revised rocker arm design.

This Page Intentionally Left Blank

COMPONENT: CASE 504BD/A-504BDT (ENGINE)

LUBRICANT: MIL-L-2104

	Fe	Ag	Al	Cr	Cu	Si	Sn	Ni	Pb	Mo	Mg
Normal Range	0-202		0-30	0-18	0-73	0-81	0-11		0-51		
Marginal Range	203-248		31-37	19-22	74-89	82-100	12-14		52-64		
High Range	249-311		38-46	23-28	91-112	101-124	15-17		65-80		
Abnormal											
Abnormal Trend (PPM Increase in 10 Hrs)	62		9	6	22	25	4		16		

TECHNICAL INFORMATION

AVERAGE:	Fe=88	Mg=513	Sn=3
	Ag=1	Na=39	Ti=1
	Al=10	Ni=1	B=52
	Cr=5	Pb=15	Mo=1
	Cu=27	Si=16	Zn=747

APPLICABLE END ITEMS

MW24, MW24B, MW24C

This Page Intentionally Left Blank

COMPONENT: CATERPILLAR 3208 (ENGINE)

LUBRICANT: MIL-L-2104

	Fe	Ag	Al	Cr	Cu	Si	Sn	Ni	Pb	Mo	Mg
Normal Range	30-150		0-10	0-3	0-20	0-20			0-25	0-20	
Marginal Range	151-230		11-15	4-12	21-27	21-35			26-40	21-27	
High Range	231-300		16-45	13-20	28-35	36-50			41-75	28-35	
Abnormal	301		46+	21+	36+	51+			76+	36+	
Abnormal Trend (PPM Increase in 10 Hrs)	60		9	4	7	10			15	7	

TECHNICAL INFORMATION

A faulty air induction system is normally the major source of silicon in engine oil. Antifoaming agents in engine oil normally contain silicon which will give 3 to 7 PPM in new oil. Silicone coatings may also be used in oil-wetted engine parts. Aluminum and cast iron parts in the engine can have significant amounts of silicon in their composition.

Molybdenum (Mo) levels can be employed to determine the condition of the top (fire) ring. Molybdenum may be present as a dry lubricant or as an additive in some greases, requiring evaluator interpretation.

The engine is liquid-cooled; therefore, ethylene glycol may be present in the engine oil, indicating coolant contamination.

Lead (Pb) is normally generated at relatively high levels during the break-in period of the engine, and then remains fairly constant except for heavy loading, marginal lubrication, or excessive dirt. Increased lead can be the first symptom of bearing distress.

APPLICABLE END ITEMS

613WDNS, 613WDS, 613SNS, 613SS, K300

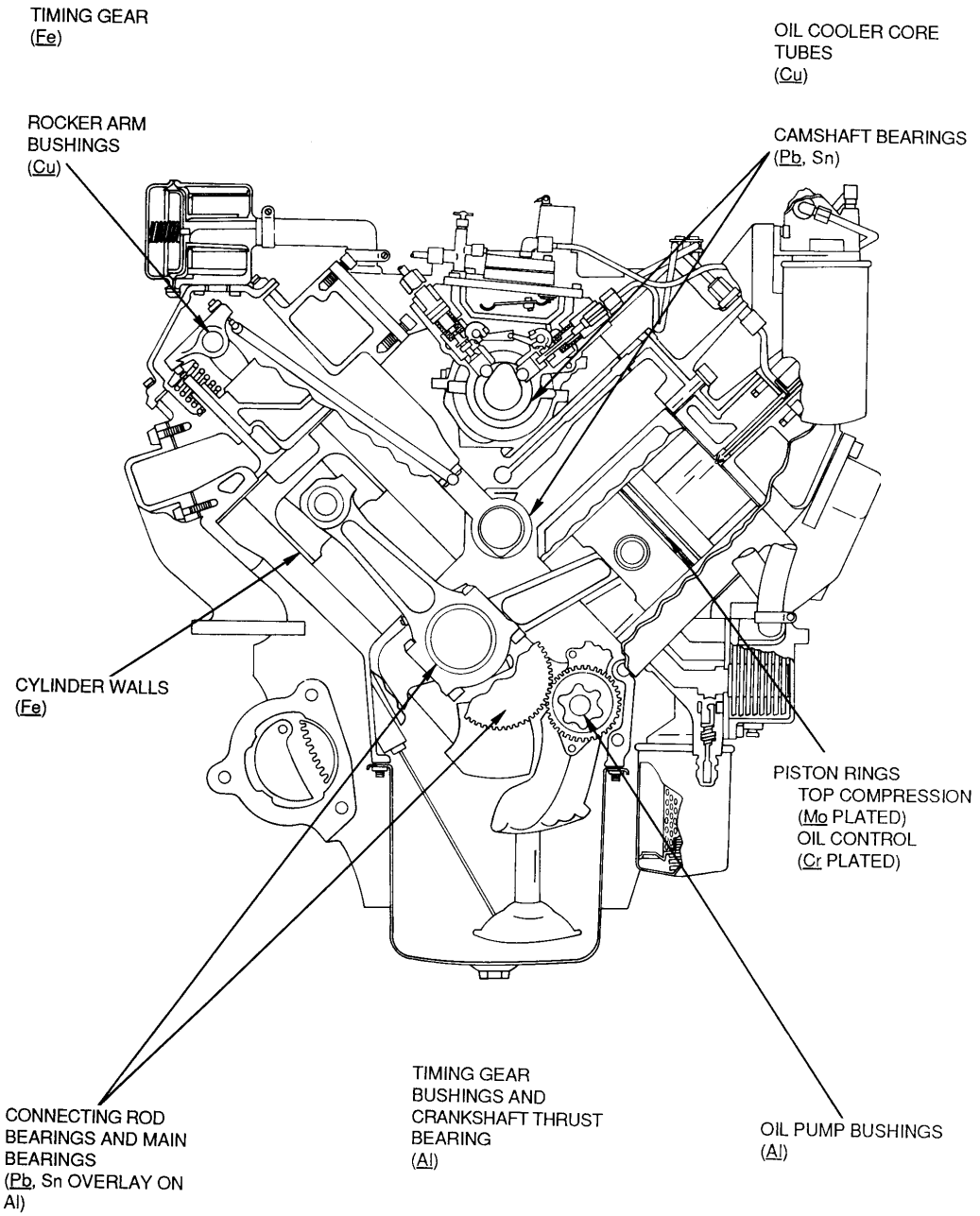

FIGURE 1. Caterpillar 3208

COMPONENT: CATERPILLAR 3304 (ENGINE)

LUBRICANT:

	Fe	Ag	Al	Cr	Cu	Si	Sn	Ni	Pb	Mo	Mg
Normal Range	0-91		0-11	0-5	0-60	0-22	0-11		0-25		
Marginal Range	92-112		12-14	6	61-73	23-27	12-13		26-31		
High Range	113-140		15-17	7	74-92	28-34	14-16		32-38		
Abnormal	141+		18+	8+	93+	35+	17+		39+		
Abnormal Trend (PPM Increase in 10 Hrs)	66		4	2	18	7	4		8		

TECHNICAL INFORMATION

APPLICABLE END ITEMS

130G, 130GNS, 130GS, 950BNS, 950OS

This Page Intentionally Left Blank

COMPONENT: CATERPILLAR 3306 (ENGINE)

LUBRICANT: MIL-L-2104

	Fe	Ag	Al	Cr	Cu	Si	Sn	Ni	Pb	Mo	Mg
Normal Range	0-154	0-1	0-24	0-29	0-58	0-26	0-11		0-34		
Marginal Range	155-189		25-29	30-36	59-72	27-32	12-14		35-42		
High Range	190-236	2	30-36	37-44	73-90	33-40	15-18		43-52		
Abnormal	237+	3+	37+	45+	91+	41+	19+		53+		
Abnormal Trend (PPM Increase in 10 Hrs)	47	2	7	9	18	8	4		10		

TECHNICAL INFORMATION

APPLICABLE END ITEMS

D5BS, D5BNS

This Page Intentionally Left Blank

COMPONENT: CATERPILLAR 11614457 (ENGINE)

LUBRICANT:

	Fe	Ag	Al	Cr	Cu	Si	Sn	Ni	Pb	Mo	Mg
Normal Range	0-137	0-2	0-26	0-12	0-54	0-28			0-36		
Marginal Range	138-169		27-32	13-14	55-66	29-35			37-44		
High Range	170-211	2	33-40	15-18	67-83	36-44			45-55		
Abnormal	212+	3+	41+	19+	84+	45+			56+		
Abnormal Trend (PPM Increase in 10 Hrs)	42	2	8	4	17	9			11		

TECHNICAL INFORMATION

APPLICABLE END ITEMS

M520, M553, M559

This Page Intentionally Left Blank

COMPONENT: CATERPILLAR D333/C/T (ENGINE)

LUBRICANT: MIL-L-2104

	Fe	Ag	Al	Cr	Cu	Si	Sn	Ni	Pb	Mo	Mg
Normal Range	0-60		0-8	0-3	0-13	0-15			0-25		
Marginal Range	61-90		9-15	4-7	14-21	16-23			26-40		
High Range	91-120		16-18	8-12	22-28	24-30			41-75		
Abnormal	121+		19+	13+	29+	31+			76+		
Abnormal Trend (PPM Increase in 10 Hrs)	24		4	3	5	6			15		

TECHNICAL INFORMATION

A faulty air induction system is normally the major source of silicon in engine oil. Antifoaming agents in engine oil normally contain silicone in engine oil. Antifoaming agents in engine oil normally contain silicone which will give 3 to 7 PPM in new oil. Silicone coatings may also be used in oil-wetted engine parts. Aluminum and cast iron parts in the engine can have significant amounts of silicon in their composition.

If the engine is in operation only occasionally, it may show a significant increase in iron (Fe) wear particles during operation caused by rust of components. Operation during cold and warm periods of the year makes a difference in the concentration of wear particles. When it is cold, the copper values become higher due to an increase of water in the oil caused by condensation. In cold weather there may also be an increase of iron, chromium, lead, and aluminum wear particles caused by increased wear from starting the engine.

The engine is liquid-cooled; therefore, ethylene glycol may be present in the engine oil, indicating coolant contamination.

Lead (Pb) is normally generated at relatively high levels during the break-in period of the engine, and then remains fairly constant except for heavy loading, marginal lubrication, or excessive dirt. Increased lead can be the first symptom of bearing distress.

APPLICABLE END ITEMS

M520, M553, M559, MEP007A, MEP-106A, MEP-116A, 855BG, CATDF, CAT 12, CAT 120 IM-600-RPB

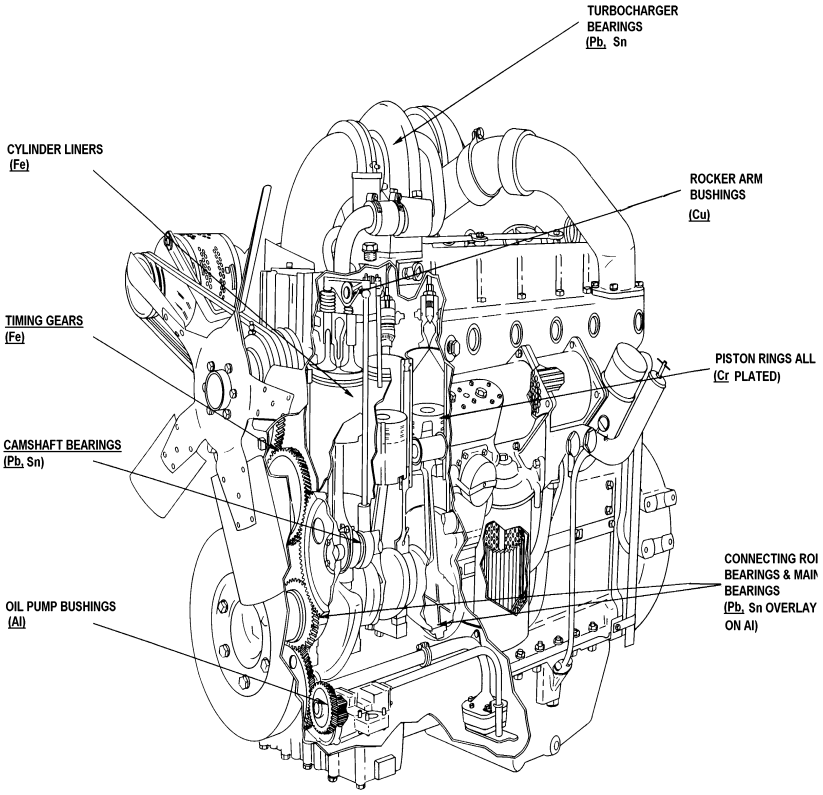

TIMING GEAR

BUSHINGS AND

CRANKSHAFT THRUST

BEARING

(Al)

OIL COOLER CORE

TUBES

(Cu)

FIGURE 1. Caterpillar D333C

COMPONENT: CATERPILLAR D343T/A (ENGINE)

LUBRICANT: MIL-L-2104

	Fe	Ag	Al	Cr	Cu	Si	Sn	Ni	Pb	Mo	Mg
Normal Range	0-40		0-9	0-2	0-15	0-15			5-25		
Marginal Range	41-65		10-15	3-6	16-25	16-23			26-40		
High Range	66-90		16-18	7-10	26-50	24-30			76+		
Abnormal	91+		19+	11+	51+	31+			76+		
Abnormal Trend (PPM Increase in 10 Hrs)	18		4	3	10	6			15		

TECHNICAL INFORMATION

A faulty air induction system is normally the major source of silicon in the engine oil. Antifoaming agents in engine oil normally contain silicone which will give 3 to 7 PPM in new oil. Silicone coatings may also be used in oil-wetted engine parts. Aluminum and cast iron parts in the engine can have significant amounts of silicon in their composition.

If the engine is in operation only occasionally, it may show a significant increase in iron (Fe) wear particles during operation caused by rust of components. Operation during cold and warm periods of the year makes a difference in the concentration of wear particles. When it is cold, the copper values become higher due to an increase of water in the oil caused by condensation. In cold weather there may also be an increase of iron, chromium, lead, and aluminum wear particles caused by increased wear from starting the engine.

The engine is liquid-cooled; therefore, ethylene glycol may be present in the engine oil, indicating coolant contamination.

Lead (Pb) is normally generated at relatively high levels during the break-in period of the engine, and then remains fairly constant except for heavy loading, marginal lubrication, or excessive dirt. Increase lead can be the first symptom of bearing distress.

APPLICABLE END ITEMS

290M, 830MB, MEP-009A, MEP-108A

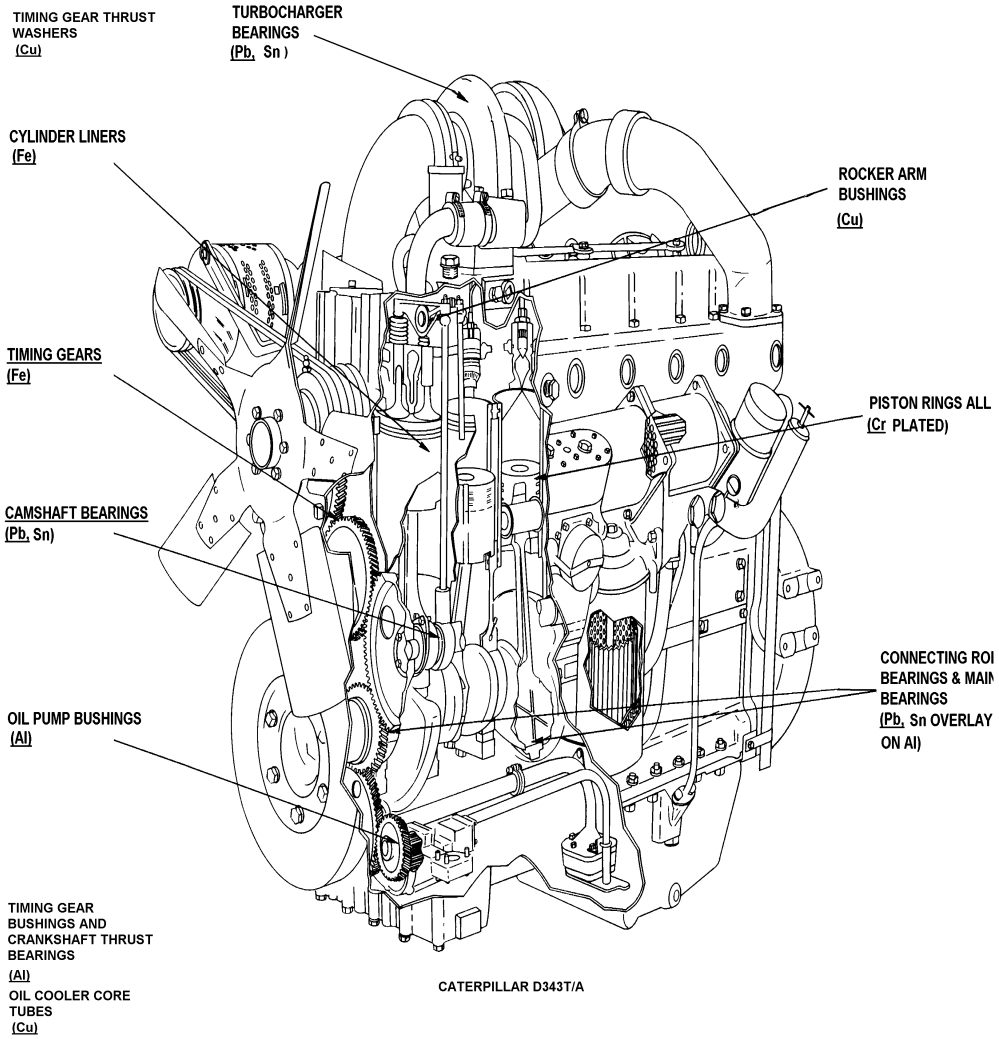

FIGURE 1. Caterpillar D343T/A

COMPONENT: **CATERPILLAR D198ER (ENGINE)**

LUBRICANT: **MIL-L-2104**

	Fe	Ag	Al	Cr	Cu	Si	Sn	Ni	Pb	Mo	Mg
Normal Range	0-113		0-20	0-16	0-26	0-26					
Marginal Range	114-139		21-25	17-19	27-32	27-32					
High Range	140-174		26-29	20-24	33-39	33-39					
Abnormal	175+		30+	25+	40+	40+					
Abnormal Trend (PPM Increase in 10 Hrs)											

TECHNICAL INFORMATION

APPLICABLE END ITEMS

D15H18Z, MEP-004A, MEP103A, MEP113A, SPHF15

This Page Intentionally Left Blank

COMPONENT: **CATERPILLAR D298/D298ERX37 (ENGINE)**

LUBRICANT: **MIL-L-2104**

	Fe	Ag	Al	Cr	Cu	Si	Sn	Ni	Pb	Mo	Mg
Normal Range	0-116		0-10	0-16	0-30	0-23					
Marginal Range	117-143		11-12	17-19	31-37	24-38					
High Range	144-179		13-14	20-24	38-44	29-34					
Abnormal	180+		15+	25+	45+	35+					
Abnormal Trend (PPM Increase in 10 Hrs)											

TECHNICAL INFORMATION

APPLICABLE END ITEMS

MEP-005A, MEP-104A, MEP-114A

This Page Intentionally Left Blank

COMPONENT: CATERPILLAR D397 (ENGINE)

LUBRICANT:

	Fe	Ag	Al	Cr	Cu	Si	Sn	Ni	Pb	Mo	Mg
Normal Range	0-40		0-7	0-6	0-73	0-17			0-32		
Marginal Range	41-49		8-9	7-8	74-89	18-20			33-39		
High Range	50-62		10-11	9-10	90-112	21-25			40-49		
Abnormal	63+		12+	11+	113+	26+			50+		
Abnormal Trend (PPM Increase in 10 Hrs)	12		3	3	22	5			10		

TECHNICAL INFORMATION

AVERAGE:	Fe=20	Mg=410	Sn=1
	Ag=1	Na=28	Ti=1
	Al=3	Ni=1	B=48
	Cr=2	Pb=10	Mo=4
	Cu=18	Si=7	Zn=684

APPLICABLE END ITEMS

LOCO 60T

This Page Intentionally Left Blank

COMPONENT: CATERPILLAR D17000 (ENGINE

LUBRICANT:

	Fe	Ag	Al	Cr	Cu	Si	Sn	Ni	Pb	Mo	Mg
Normal Range	0-148		0-11	0-5	0-54	0-31	0-4		0-44		
Marginal Range	149-182		12-14	6-7	55-67	32-38			45-54		
High Range	183-228		15-17	8	68-83	39-47	5		55-68		
Abnormal	229+		18+	9+	84+	48+	6+		69+		
Abnormal Trend (PPM Increase in 10 Hrs)	46		4	2	17	9	2		14		

TECHNICAL INFORMATION

AVERAGE:	Fe=61	Mg-308	Sn=1
	Ag=1	Na=37	Ti=1
	Al=4	Ni=1	B=23
	Cr=1	Pb=13	Mo=1
	Cu=17	Si=13	Zn=517

APPLICABLE END ITEMS

LOCO 44T

This Page Intentionally Left Blank

COMPONENT: CONTINENTAL AVDS 1790-2A/2C/2D/ (ENGINE)

LUBRICANT: MIL-L-2104

	Fe	Ag	Al	Cr	Cu	Si	Sn	Ni	Pb	Mo	Mg
Normal Range	0-99	0-6	0-43	0-10	0-50	0-60	0-8	0-6	0-30	0-14	
Marginal Range	100-145	7-9	44-63	11-14	51-65	61-85	9-12	7-8	31-42	15-20	
High Range	146-185	10-11	64-82	15-18	66-85	86-110	13-15	9-10	43-55	21-26	
Abnormal	186+	12+	83+	19+	86+	111+	16+	11+	56+	27+	
Abnormal Trend (PPM Increase in 10 Hrs)	37	3	16	4	17	22	4	3	11	5	

TECHNICAL INFORMATION

The AVDS 1790-2A engines in the field are being modified to AVDS 1790-2D. AVDS-1790-2C/2D/2/DR engines are classified as Reliability Improvement Selected Equipment (RISE) versions of the engine. The RISE engines retain 10 gallons less residual oil after oil drain than the unmodified engines.

A faulty air induction system is the major source of silicon in engine oil. Silicone coatings may also be used in oil-wetted engine parts. Aluminum and cast iron parts in the engine can have significant amounts (up to 13.5%) of silicon in their composition.

When the rear main seal in an AVDS 1790 engine attached to a CD 850-6A transmission wears excessively or ceases to function properly, there will be cross-contamination of the engine and transmission lubricants. This, in general, will be indicated by increasing or high copper (Cu) and lead (Pb) in the engine oil samples and, simultaneously, increasing or high molybdenum (Mo) in the transmission oil samples.

The engine is air-cooled; therefore, no liquid coolant contamination problems should be experienced.

Aluminum and iron particles from both wear and machining are commonly found in the oil pan.

Aluminum-Silicon (Al-Si)	Piston wear or piston and cylinder wall wear. Could also be derived from machining chips left in engine.
Iron (Fe)	Wear of cylinder walls. Wear of numerous other engines parts. Also from machining chips left in engine.
Chromium (Cr)	Oil control rings are surfaced plated with chromium.
Molybdenum (Mo)	Face of the compression rings are surface plated with molybdenum.

Lead-Tin-Copper (Pb-Sn-Cu)	Crankshaft bearings, both connecting rods, and mains.
Iron-Chromium-Nickel (Fe-Cr-Ni)	Oil ring expander spring or fan drive clutch ball.
Silver (Ag)	Trace metals in rocker arm roller sleeve bearings.

APPLICABLE END ITEMS

AVLB, M247, M48A2, M48A3, M48A5, M60, M60A1, M60A2, M60A3, M728

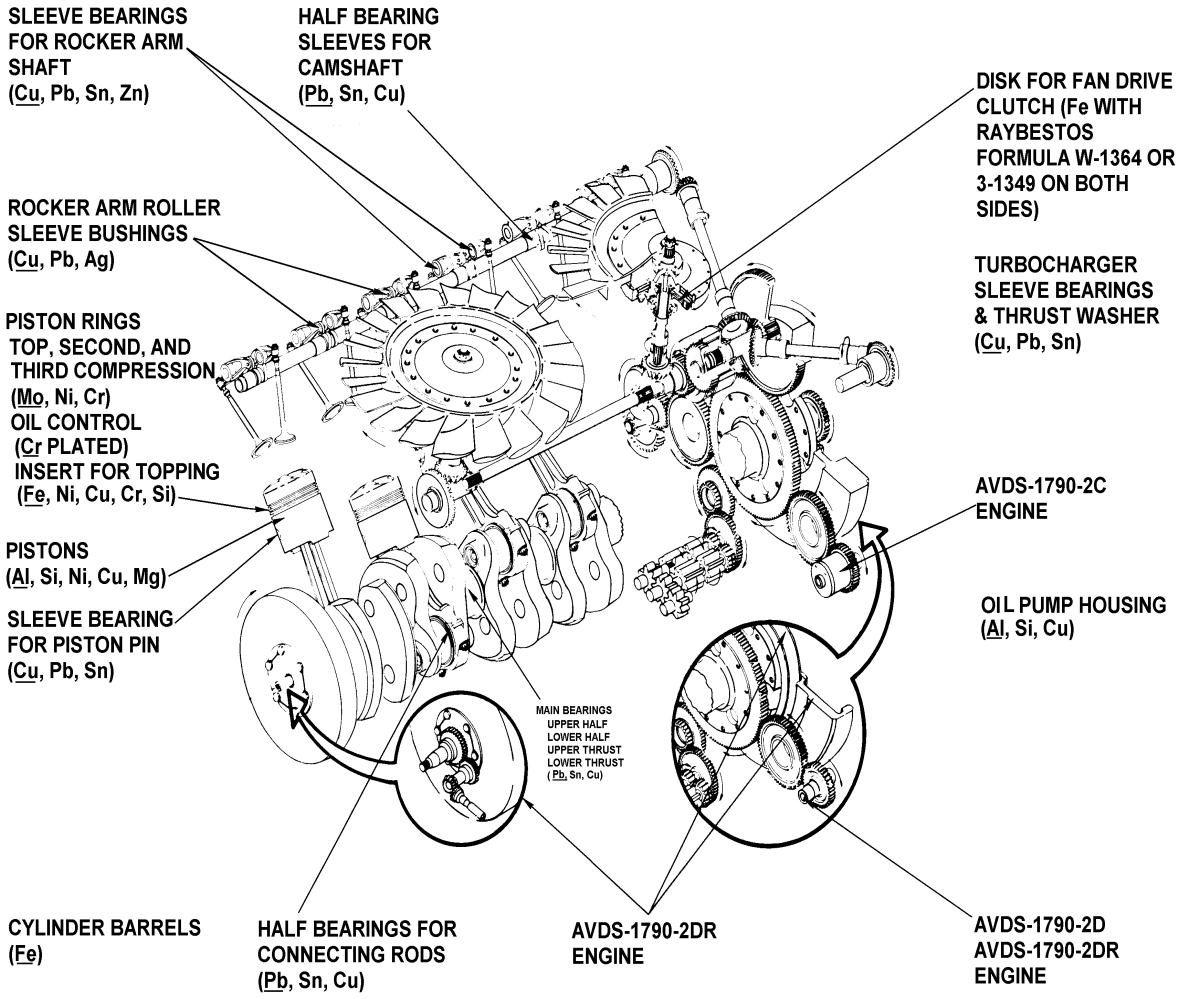

FIGURE 1. Continental AVDS 1790-2A/2C/2D

This Page Intentionally Left Blank

COMPONENT: CONTINENTAL AVDS 1790-2DR (ENGINE)

LUBRICANT: MIL-L-2104

	Fe	Ag	Al	Cr	Cu	Si	Sn	Ni	Pb	Mo	Mg
Normal Range	0-103	0-7	0-20	0-10	0-28	0-41	0-6	0-3	0-22	0-3	
Marginal Range	104-127	8-9	21-24	11-12	29-34	42-51	7-8	4	23-28	4	
High Range	128-158	10-12	25-40	13-15	35-66	52-90	9-11	5-6	29-40	5	
Abnormal	159+	13+	41+	16+	67+	91+	12+	7+	41+	6+	
Abnormal Trend (PPM Increase in 10 Hrs)	14	2	3	2	4	10	2	2	4	2	

TECHNICAL INFORMATION

The AVDS 1790-2DR is equipped with a power take-off unit employed in hoisting and towing various vehicles of equipment.

A faulty air induction system is the major source of silicon in engine oil. Aluminum and cast iron parts in the engine can have significant amounts (up to 13.5 percent) of silicon in their composition.

When the rear main seal in an AVDS 1790 engine attached to a XT 1410-2A transmission wears excessively or ceases to function properly, there will be cross-contamination of the engine and transmission lubricants. This, in general will be indicated by increasing or high copper (Cu) and lead (Pb) in the engine oil samples and, simultaneously, increasing or high molybdenum (Mo) in the transmission oil samples.

The engine is air-cooled; therefore, no liquid coolant contamination problems should be experienced.

Aluminum and iron particles from both wear and machining are commonly found in the oil pan.

APPLICABLE END ITEMS

M88A1

This Page Intentionally Left Blank

COMPONENT: CONTINENTAL AVDS1790-8CR (ENGINE)

LUBRICANT: MIL-L-2104

	Fe	Ag	Al	Cr	Cu	Si	Sn	Ni
Normal Range	0-103	0-7	0-20	0-10	0-28	041	0-6	0-3
Marginal Range	104-127	8-9	21-24	11-12	29-34	42-51	7-8	4
High Range	128-158	10-12	25-40	13-15	35-66	52-90	9-11	5-6
Abnormal	158+	13+	41+	16+	67+	91+	12+	7+
Abnormal Trend (PPM Increase in 10 Hrs)	14	2	3	2	4	10	2	2

	Pb	Mo	Mg	Ti	Na	Zn	B
Normal Range	0-22	0-103	0-99	0	0-13	0-496	0-87
Marginal Range	23-28	104-127	100-122	*	14-16	497-610	88-107
High Range	29-40	128-158	123-152	1	17-19	611-763	108-134
Abnormal	41+	159+	153+	2+	20+	764+	135+
Abnormal Trend (PPM Increase in 10 Hrs)	4	32	30	1	4	153	27

TECHNICAL INFORMATION

The AVDS 1790-8CR is equipped with a power take-off driveshaft employed to power the HH88A2 Hercules' vehicle hydraulic system.

A faulty air induction system is one of the major sources of silicon (Si) in engine oil. Silicone coatings may also be used in oil-wetted engine parts. Aluminum and cast iron parts in the engine can have significant amounts of silicon in their composition.

The cylinder walls are impregnated with a ceramic material consisting of chromium (Cr), magnesium (Mg) and silicon (Si). Significant increases in Cr, Mg, or Si wear material particles during operation may be an early symptom of cylinder wall distress.

When the rear main seal in an AVDS 1790-8CR engine (attached to the XT1410-5A transmission) wears excessively or ceases to function properly, there will be cross-contamination of the engine and transmission lubricants. In general, this will be indicated by increasing or high copper (Cu) and lead (Pb) in the wear metal analysis readings of the engine oil samples and, simultaneously, increasing or high molybdenum (Mo) in the wear metal analysis readings of the transmission oil samples.

The AVDS 1790-8CR engine is air-cooled; therefore, evidence of ethylene glycol or other liquid coolants should

not be found in oil sample analysis data.

Aluminum and iron particles from both wear and machining are commonly found in the oil pan.

Operation in cold and warm ambient environment conditions can affect the concentration of wear particles in oil sample analysis data. During cold ambient operations, Cu readings may increase due to increased water contamination from condensation. Additionally, cold ambient engine starting wear may increase for Fe, Cr, Pb and Al wear particle concentrations.

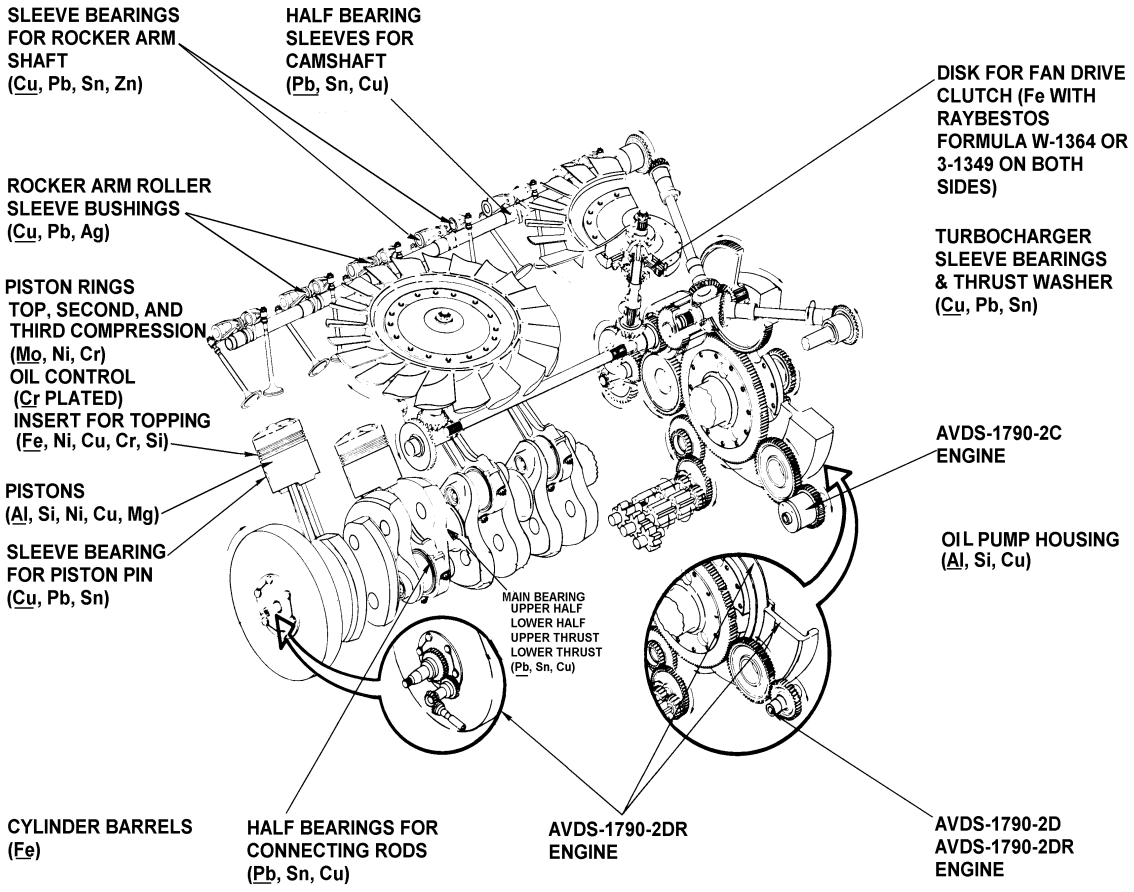

FIGURE 1. Continental AVDS1790-2DR

This Page Intentionally Left Blank

COMPONENT: **CONTINENTAL LD/LDS/LDT 465-1/-2 (ENGINE)**

LUBRICANT: **MIL-L-2104**

	Fe	Ag	Al	Cr	Cu	Si	Sn	Ni	Pb	Mo	Mg
Normal Range	0-214	0-5	064	0-30	0-51	0-65			0-98		
Marginal Range	215-263	6	65-78	31-36	52-63	66-80			99-121		
High Range	264-329	7-8	79-98	37-45	64-79	81-100			122-151		
Abnormal	330+	9+	99+	46+	80+	101+			152+		
Abnormal Trend (PPM Increase in 10 Hrs)	15	2	4	3	4	4			6		

TECHNICAL INFORMATION

A faulty air induction system is normally the major source of silicon in engine oil. Antifoaming agents in engine oil normally contain silicone which will give 3 to 7 PPM in new oil. Silicone coatings may also be used in oil-wetted engine parts. Aluminum and cast iron parts in the engine can have significant amounts (up to 10.5 percent) of silicon in their composition.

The engine is liquid-cooled; therefore, ethylene glycol may be present in the engine oil, indicating coolant contamination.

Piston rings, cylinder sleeves, and pistons normally show the most significant wear during operation. There is normally some wear of the rocker arm bearings which would produce trace amounts of silver (Ag).

Iron particles from both wear and machining are commonly found in the oil pan.

Chromium (Cr)	Oil control rings are surface plated with chromium.
Tin (Sn)	Plating on pistons.
Tin-Iron (Sn-Fe)	Engine pistons and cylinder wall wear.
Iron (Fe)	Wear of cylinder walls. Wear of numerous other engine parts. Also may be from machining chips left in engine.
Nickel-Chromium-Cobalt (Ni-Cr-Co)	Exhaust valves.

Cobalt-Chromium-Tungsten	Intake valve seat.
Silver (Ag)	Trace metal in rocker-arm bearings.

APPLICABLE END ITEMS

M109A3, M185A3, M246A2, M291A2, M45A2, M46A2, M50A2, M50A3, M51A2, M52A2, M543A2, M54A2, M54A2C, M55A2, M61A2, M63A2, M656, M751, M756A2, M757, M764, M791

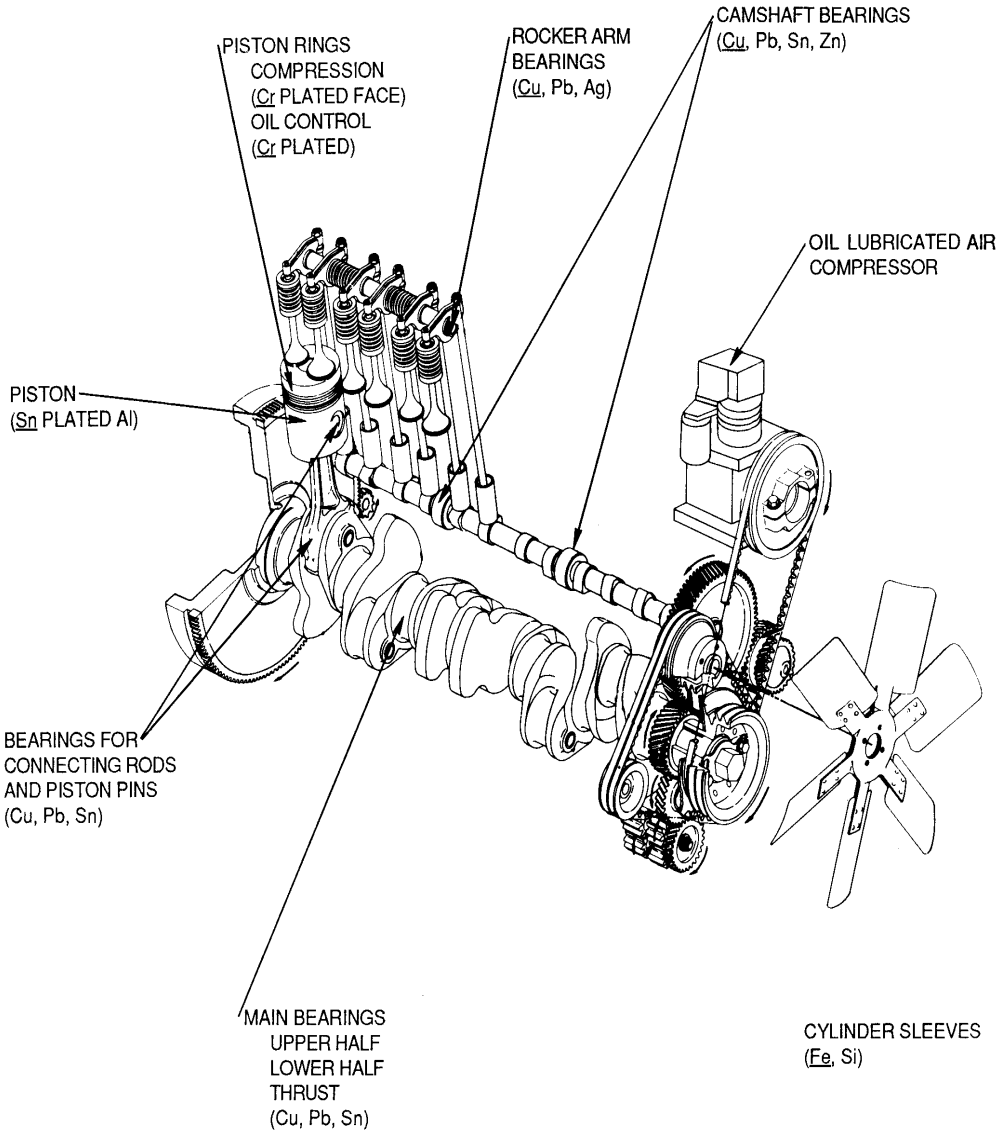

FIGURE 1. Continental LD/LDS/LDT 465

This Page Intentionally Left Blank

COMPONENT: **CONTINENTAL LDS-427-2 (ENGINE)**

LUBRICANT: **MIL-L-2104**

	Fe	Ag	Al	Cr	Cu	Si	Sn	Ni	Pb	Mo	Mg
Normal Range	0-123		0-30	0-20	0-72	0-31	0-25		0-85		
Marginal Range	124-151		31-37	21-25	73-88	32-38	29-31		86-104		
High Range	152-189		38-46	26-31	89-110	39-48	32-38		105-130		
Abnormal	190+		47+	32+	111+	49+	39+		131+		
Abnormal Trend (PPM Increase in 10 Hrs)	12		3	2	3	3	3		6		

TECHNICAL INFORMATION

APPLICABLE END ITEMS

M109A2, M185A2, M275A1, M292A1, M292A4, M35A1, M491A1C, M50A1

This Page Intentionally Left Blank

COMPONENT: CUMMINS HBI-600 (ENGINE)

LUBRICANT:

	Fe	Ag	Al	Cr	Cu	Si	Sn	Ni	Pb	Mo	Mg
Normal Range	0-155		0-15	0-30	0-97	0-32			0-47		
Marginal Range	156-191		16-19	31-37	98-120	33-39			48-57		
High Range	192-238		20-23	38-46	120-150	40-49			58-72		
Abnormal	239+		24+	47+	151+	50+			73+		
Abnormal Trend (PPM Increase in 10 Hrs)	48		4	9	30	10			14		

TECHNICAL INFORMATION

AVERAGE:	Fe=89	Mg=290	Sn=2
	Ag=1	Na=22	Ti=1
	Al=6	Ni=1	B=19
	Cr=8	Pb=23	Mo=1
	Cu=27	Si=14	Zn=629

APPLICABLE END ITEMS

LOCO 25 T, LOCO 45 T

This Page Intentionally Left Blank

COMPONENT: **CUMMINS JN6 (ENGINE)**

LUBRICANT: **MIL-L-2104**

	Fe	Ag	Al	Cr	Cu	Si	Sn	Ni	Pb	Mo	Mg
Normal Range	0-123		0-32	0-23	0-97	0-30					
Marginal Range	124-151		33-39	24-28	98-119	31-37					
High Range	152-189		40-49	29-34	120-149	38-44					
Abnormal	190+		50+	35+	150+	45+					
Abnormal Trend (PPM Increase in 10 Hrs)											

TECHNICAL INFORMATION

APPLICABLE END ITEMS

2380, 2385

This Page Intentionally Left Blank

COMPONENT: CUMMINS LI-600 (ENGINE)

LUBRICANT:

	Fe	Ag	Al	Cr	Cu	Si	Sn	Ni	Pb	Mo	Mg
Normal Range	0-68		0-3	0-3	0-79	0-32	0-6		0-33		
Marginal Range	69-83		4	4	80-97	33-39	7		34-41		
High Range	84-104		5	5	98-121	40-49	8-9		42-51		
Abnormal	105+		6+	6+	122+	50+	10+		52+		
Abnormal Trend (PPM Increase in 10 Hrs)	21		2	2	24	10	3		10		

TECHNICAL INFORMATION

AVERAGE:	Fe=29	Mg=469	Sn=2
	Ag=1	Na=55	Ti=1
	Al=1	Ni=1	B=73
	Cr=1	Pb=11	Mo=1
	Cu=32	Si=9	Zn=715

APPLICABLE END ITEMS

LOCO 80 T

This Page Intentionally Left Blank

COMPONENT: CUMMINS NHBIS-600 (ENGINE)

LUBRICANT:

	Fe	Ag	Al	Cr	Cu	Si	Sn	Ni	Pb	Mo	Mg
Normal Range	0-50		0-7	0-7	0-153	0-17			0-45		
Marginal Range	51-62		8-9	8	154-188	18-21			45-56		
High Range	63-78		10-11	9-10	189-235	22-26			57-70		
Abnormal	79+		12+	11+	236+	27+			71+		
Abnormal Trend (PPM Increase in 10 Hrs)	16		3	3	47	5			14		

TECHNICAL INFORMATION

AVERAGE:	Fe=21	Mg=444	Sn=1
	Ag=1	Na=23	Ti=1
	Al=2	Ni=1	B=42
	Cr=2	Pb=10	Mo=151
	Cu=39	Si=6	Zn=716

APPLICABLE END ITEMS

LOCO 80 T

This Page Intentionally Left Blank

COMPONENT: **CUMMINS NHC 250 (ENGINE)**

LUBRICANT: **MIL-L-2104**

	Fe	Ag	Al	Cr	Cu	Si	Sn	Ni	Pb	Mo	Mg
Normal Range	0-189		0-24	0-27	0-31	0-48			0-73		
Marginal Range	190-233		25-29	28-34	32-39	49-60			74-90		
High Range	234-291		30-36	35-42	40-48	61-74			91-112		
Abnormal	292+		37+	43+	49+	75+			113+		
Abnormal Trend (PPM Increase in 10 Hrs)	13		3	3	3	4			5		

TECHNICAL INFORMATION

A faulty air induction system is normally the major source of silicon in engine oil. Antifoaming agents in engine oil normally contain silicone which will give 3 to 7 PPM in new oil. Silicone coatings may also be used in oil-wetted engine parts. Aluminum and cast iron parts in the engine can have significant amounts of silicone in their composition.

Piston rings and cylinder liners normally show the most significant wear during operation.

The engine is liquid-cooled; therefore, ethylene glycol present in the engine oil would indicate a leak in the coolant system.

Aluminum-Silicon (Al-Si)	Piston wear or piston and cylinder wall wear.
Chromium (Cr)	Oil control rings and first compression ring are chromium plated.
Chromium-Iron (Cr-Fe)	Ring and Cylinder liner wear.
Iron (Fe)	Wear of cylinder walls. Wear of numerous other engine parts. Also from machining chips left in the engine.

APPLICABLE END ITEMS

M809, M809A1, M810, M811, M811A1, M811A2, M812, M812A1, M813, M813A1, M814, M815, M816, M817, M818, M819, M820, M820A1, M820A2, M821, M923, M924, M925, M926, M927, M928, M929, M930, M931, M932, M934, M936, M939, M940, M941, M942, M943, M944, M945

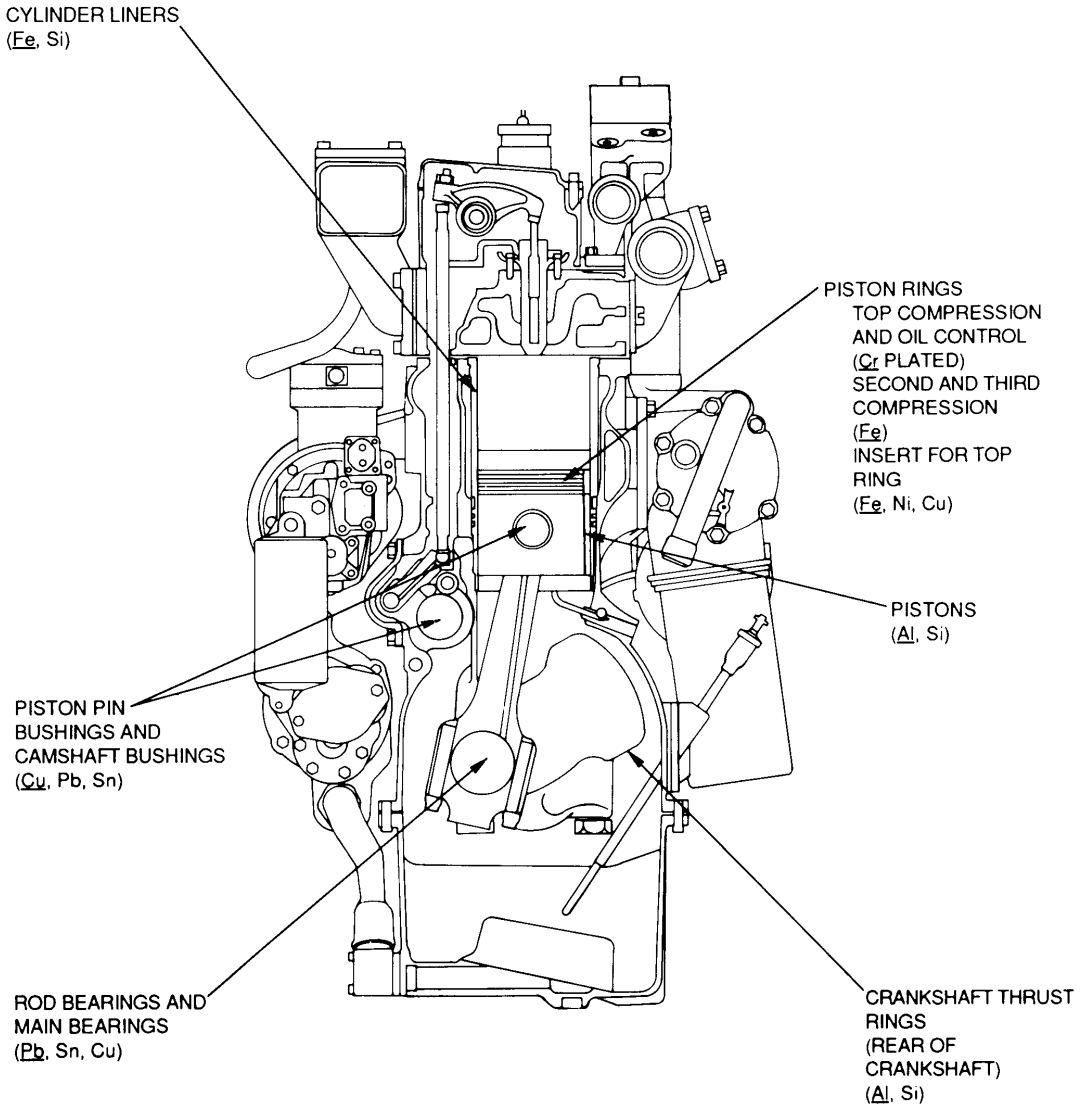

FIGURE 1. Cummins NHC 250

COMPONENT: **CUMMINS NTC 290 (ENGINE)**

LUBRICANT: **MIL-L-2104**

	Fe	Ag	Al	Cr	Cu	Si	Sn	Ni	Pb	Mo	Mg
Normal Range	0-107		0-19	0-13	0-92	0-42	0-4	0-2	0-38	0-12	
Marginal Range	108-130		20-24	14-16	93-114	43-51	5	3	39-47	13-14	
High Range	131-164		25-30	17-19	115-142	52-64	6	4	48-58	15-18	
Abnormal	165+		31+	20+	143+	65+	7+	5+	59+	19+	
Abnormal Trend (PPM Increase in 10 Hrs)	11		2	2	6	4	2	2	3	2	

TECHNICAL INFORMATION

A faulty air induction system is normally the major source of silicon in engine oil. Antifoaming agents in engine oil normally contain silicone which will give 3 to 7 PPM in new oil. Silicone coatings may also be used in oil-wetted engine parts. Aluminum and cast iron parts in the engine can have significant amounts of silicon in their composition.

Piston rings and cylinder liners normally show the most significant wear during operation.

The engine is liquid-cooled; therefore, ethylene glycol present in the engine oil would indicate a leak in the coolant system.

Wear of end-thrust washers in turbocharger will permit rubbing of the turbocharger hot wheel against the turbocharger housing. This in turn will produce chromium, iron, nickel, and copper in the engine oil.

Aluminum-Silicon (Al-Si)	Piston wear or piston and cylinder wall wear. Crankshaft thrust bearing.
Chromium (Cr)	Oil control rings and first compression ring are chromium plated.
Chromium-Iron (Cr-Fe)	Ring and Cylinder liner wear.
Iron (Fe)	Wear of cylinder walls. Wear of numerous other engine parts. Also from machining chips left in the engine.

APPLICABLE END ITEMS

F5070

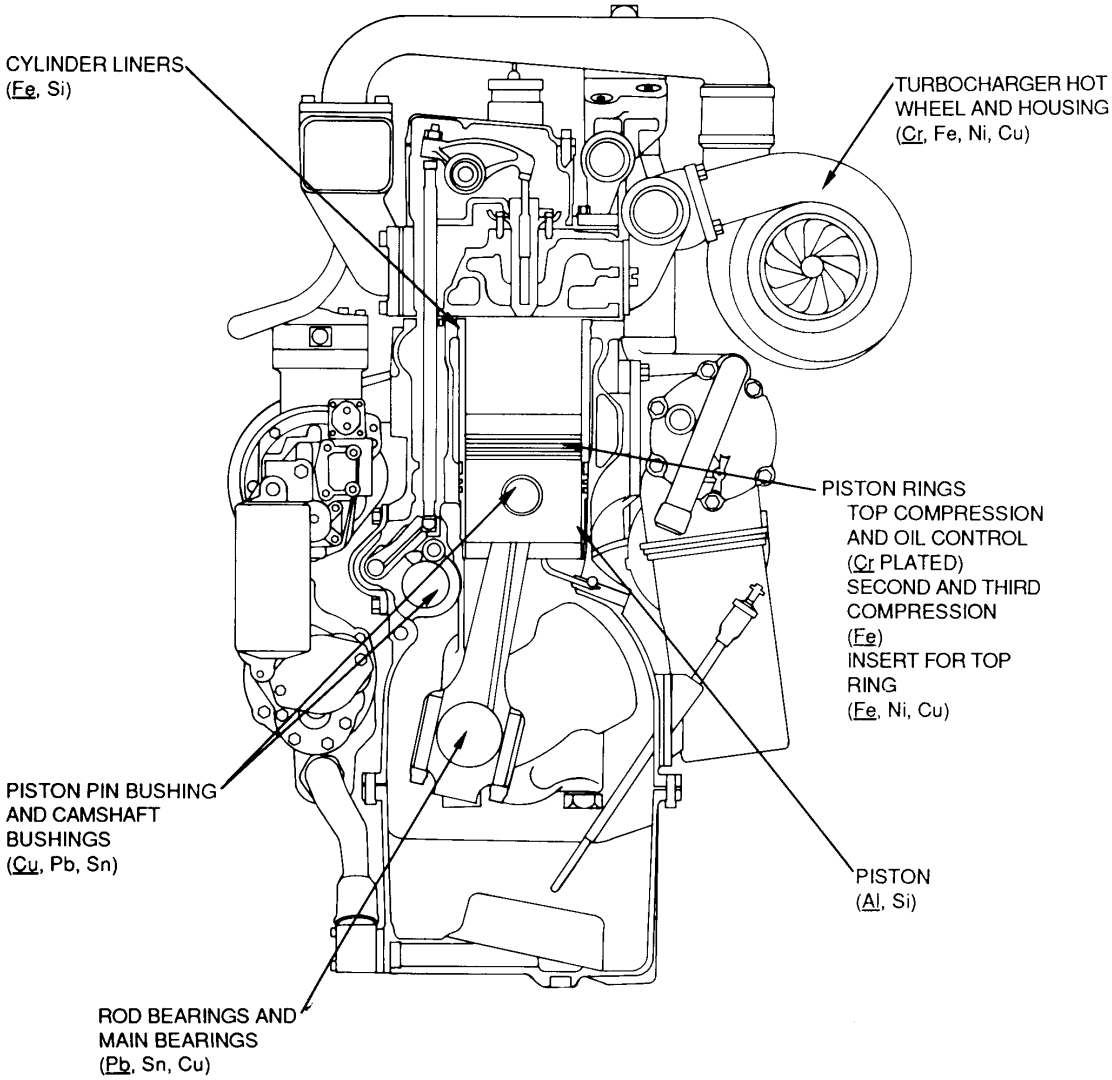

FIGURE 1. Cummins NTC 290

COMPONENT: **CUMMINS NTA/NTC 400 (ENGINE)**

LUBRICANT: **MIL-L-2104**

	Fe	Ag	Al	Cr	Cu	Si	Sn	Ni	Pb	Mo	Mg
Normal Range	0-57		0-15	0-9	0-62	0-31			0-35		
Marginal Range	58-70		16-18	10-11	63-76	32-38			36-43		
High Range	71-88		19-22	12-13	77-95	39-47			44-54		
Abnormal	89+		23+	14+	96+	48+			55+		
Abnormal Trend (PPM Increase in 10 Hrs)	4		2	2	4	3			3		

TECHNICAL INFORMATION

A faulty air induction system is normally the major source of silicon in engine oil. Antifoaming agents in engine oil normally contain silicone which will give 3 to 7 PPM in new oil. Silicone coatings may also be used in oil-wetted engine parts. Aluminum and cast iron parts in the engine can have significant amounts of silicon in their composition.

Piston rings and cylinder liners normally show the most significant wear during operation.

The engine is liquid-cooled; therefore, ethylene glycol present in the engine oil would indicate a leak in the coolant system.

Wear of end-thrust washers in turbocharger will permit rubbing of the turbocharger hot wheel against the turbocharging housing. This in turn will produce chromium, iron, nickel, and copper in the engine oil.

APPLICABLE END ITEMS

D63, M915, M915A1, M916, M917, M918, M919, M920

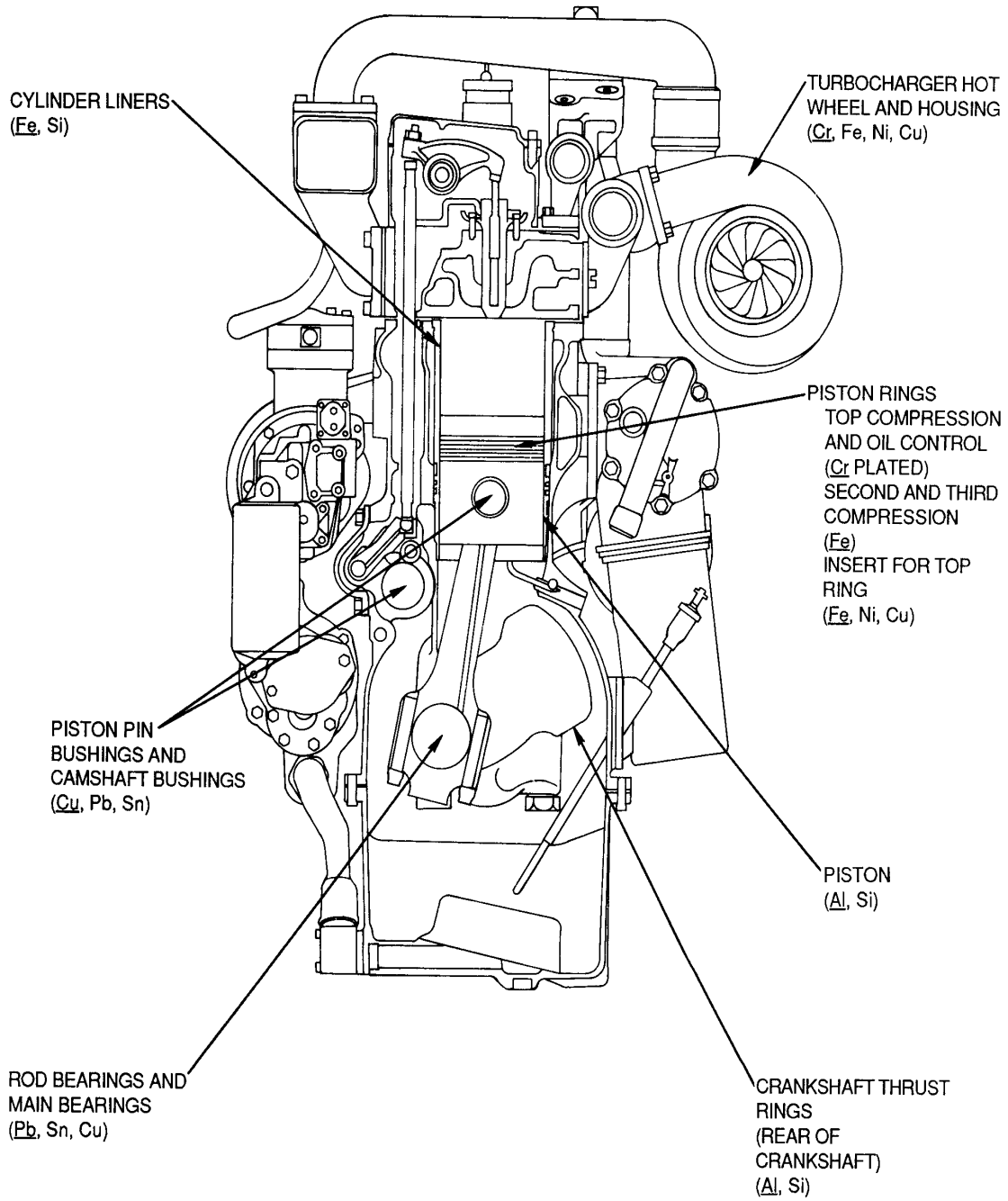

FIGURE 1. Cummins NTC 400

COMPONENT: CUMMINS V8-265 (ENGINE)

LUBRICANT:

	Fe	Ag	Al	Cr	Cu	Si	Sn	Ni	Pb	Mo	Mg
Normal Range	0-173		0-19	0-25	0-157	0-101	0-164	0-221	0-69		
Marginal Range	174-213		20-23	26-31	158-194	102-124	165-202	222-272	70-85		
High Range	214-266		24-28	32-39	195-242	125-155	203-253	273-340	86-107		
Abnormal	267+		29+	40+	243+	1569+	254+	341+	108+		
Abnormal Trend (PPM Increase in 10 Hrs)	53		6	8	48	31	51	68	21		

TECHNICAL INFORMATION

APPLICABLE END ITEMS

2385, 2380

This Page Intentionally Left Blank

COMPONENT: CUMMINS V8-300 (ENGINE)

LUBRICANT:

	Fe	Ag	Al	Cr	Cu	Si	Sn	Ni	Pb	Mo	Mg
Normal Range	0-139		0-19	0-30	0-85	0-56	0-205	0-279	0-88		
Marginal Range	140-171		20-24	31-37	86-105	57-69	206-252	280-343	89-108		
High Range	172-213		25-30	38-46	106-131	70-86	253-315	344-429	109-135		
Abnormal	214+		31+	47+	132+	87+	316+	430+	136+		
Abnormal Trend (PPM Increase in 10 Hrs)	43		6	9	26	17	63	86	27		

TECHNICAL INFORMATION

APPLICABLE END ITEMS

M123A1C, M123E2

This Page Intentionally Left Blank

COMPONENT: CUMMINS VT-400 (ENGINE)

LUBRICANT:

	Fe	Ag	Al	Cr	Cu	Si	Sn	Ni	Pb	Mo	Mg
Normal Range	0-134	0-1	0-21	0-64	0-270	0-40	0-4		0-28	0-26	
Marginal Range	135-165		22-26	65-79	271-332	41-50	5		29-35	27-32	
High Range	166-206	2	27-33	80-99	333-415	51-62	6-7		36-43	33-40	
Abnormal	207+	3+	34+	100+	416+	63+	8+		44+	41+	
Abnormal Trend (PPM Increase in 10 Hrs)	41	2	7	20	83	12	2		9	8	

TECHNICAL INFORMATION

AVERAGE:	Fe=71	Mg=0	Mo=4
	Ag=1	Ti=0	Si-=21
	Al=11	Pb=12	Na=78
	Cr=33	Sn=1	Zn=0
	Cu=129	Ni=0	B=22

APPLICABLE END ITEMS

AAVC7A1, AAVP7A1, AAVR7A1, LVTC7A1, LVTP7A1, LVTR7A1

This Page Intentionally Left Blank

COMPONENT: CUMMINS VTA-903 (ENGINE)

LUBRICANT: MIL-L-2104

	Fe	Ag	Al	Cr	Cu	Si	Sn	Ni	Pb	Mo	Mg
Normal Range	0-87		0-17	0-30	0-23	0-32	0-3		0-22		
Marginal Range	88-112		18-23	31-41	24-28	33-40	4-5		23-27		
High Range	113-140		24-28	45-52	29-36	41-49	6-7		28-33		
Abnormal	141+		29+	53+	37+	50+	8+		34+		
Abnormal Trend (PPM Increase in 10 Hrs)	13		3	7	8	6	2		2		

TECHNICAL INFORMATION

A faulty air induction system is normally the major source of silicon in the engine oil. Antifoaming agents in engine oil normally contain silicone which will give 3 to 7 PPM in new oil. Silicone coatings may also be used in oil-wetted engine parts. Aluminum and cast iron parts in the engine can have significant amounts of silicon in their composition.

Piston rings and cylinder liners normally show the most significant wear during operation.

The engine is liquid-cooled; therefore, ethylene glycol present in the engine oil would indicate a leak in the coolant system.

Valve-guide wear will normally not show up in the engine oil because it, along with guide lubricating oil, will be exhausted during operation of the engine.

APPLICABLE END ITEMS

9125TC, LVTR-7A1, M2, M3 M320RT, M9, M993

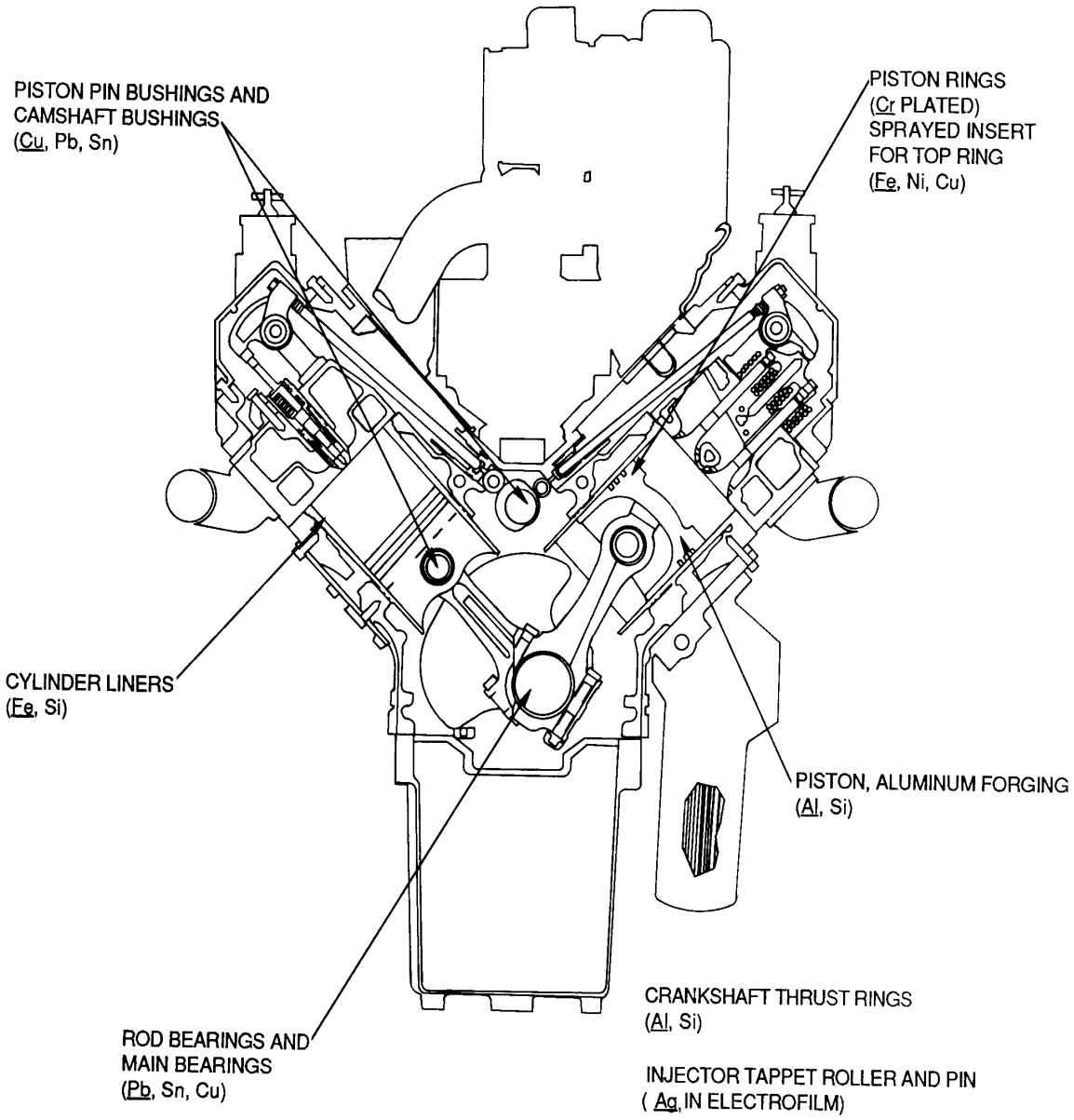

FIGURE 1. Cummins VTA-903

COMPONENT: **DETROIT DIESEL ALLISON 190 (ENGINE)**

LUBRICANT: **MIL-L-2104**

	Fe	Ag	Al	Cr	Cu	Si	Sn	Ni	Pb	Mo	Mg
Normal Range	0-192		0-39	0-23	0-36	0-44	0-20	0-3	0-69	0-4	
Marginal Range	193-237		40-48	24-29	37-45	45-54	21-25	4	70-85	5	
High Range	238-296		49-90	30-36	46-56	55-68	26-31	5	86-107	6	
Abnormal	297+		61+	37+	57+	69+	32+	6+	108+	7+	
Abnormal Trend (PPM Increase in 10 Hrs)	22		3	2	3	4	2	2	6	2	

TECHNICAL INFORMATION

APPLICABLE END ITEMS

M876

This Page Intentionally Left Blank

COMPONENT: **DETROIT DIESEL ALLISON 3-53 (ENGINE)**

LUBRICANT: **MIL-L-2104**

	Fe	Ag	Al	Cr	Cu	Si	Sn	Ni	Pb	Mo	Mg
Normal Range	0-212	0-10	0-27	0-22	0-36	0-74	0-32	0-8	0-41	0-6	
Marginal Range	231-261	11-12	28-33	23-27	37-44	75-92	33-39	9-10	42-51	7-8	
High Range	262-327	13-15	34-42	28-34	45-55	93-115	40-49	11-13	52-63	9-10	
Abnormal	328+	16+	43+	35+	56+	116+	50+	14+	64+	11+	
Abnormal Trend (PPM Increase in 10 Hrs)	15	2	3	3	3	5	3	2	4	2	

TECHNICAL INFORMATION

A faulty air induction system is normally a significant source of silicon in engine oil. Antifoaming agents in engine oil normally contain silicone which will give 3 to 7 PPM in new oil. Silicone is used in "Print-O-Seal" cylinder head gaskets and crankshaft seals for this engine which will normally show 20 to 30 PPM silicon in the oil. Aluminum and cast iron parts in the engine have significant amounts of silicon in their composition.

Significant wear can be expected on the piston skirts and cylinder liners for this engine.

The engine is liquid-cooled; therefore, ethylene glycol present in the engine oil would indicate a leak in the coolant system.

APPLICABLE END ITEMS

30KW, BSF400, C350B, C530A, CE301, H446, HICE-27D, HPI-27B, M561, SP848

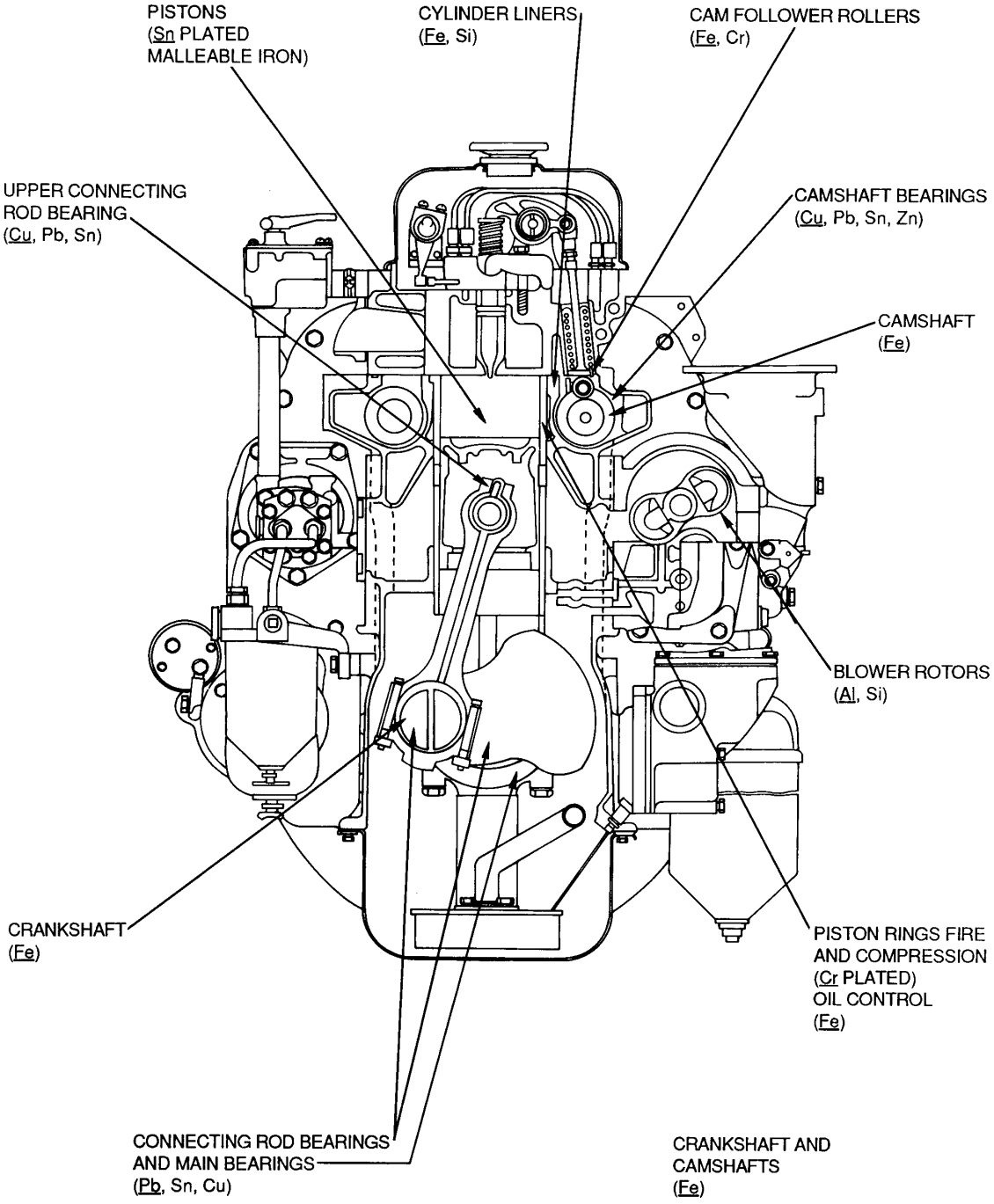

FIGURE 1. Detroit Diesel Allison 3-53

COMPONENT: DETROIT DIESEL ALLISON 3080 (ENGINE)

LUBRICANT:

	Fe	Ag	Al	Cr	Cu	Si	Sn	Ni	Pb	Mo	Mg
Normal Range	0-100		0-5	0-10	0-26	0-11			0-20		
Marginal Range	101-123		6-7	11-12	27-31	12-14			21-25		
High Range	124-153		8	13-15	32-39	15-17			26-31		
Abnormal	154+		9+	16+	40+	18+			32+		
Abnormal Trend (PPM Increase in 10 Hrs)	31		2	4	8	4			6		

TECHNICAL INFORMATION

AVERAGE:	Fe=39	Mg=266	Sn=1
	Ag=1	Na=15	Ti=1
	Al=2	Ni=1	B=31
	Cr=3	Pb=7	Mo=1
	Cu=12	Si=1	Zn=744

APPLICABLE END ITEMS

LOCO 10 T

This Page Intentionally Left Blank

COMPONENT: **DETROIT DIESEL ALLISON 4-53/N (ENGINE)**

LUBRICANT: **MIL-L-2104**

	Fe	Ag	Al	Cr	Cu	Si	Sn	Ni	Pb	Mo	Mg
Normal Range	0-164		0-13	0-16	0-30	0-34					
Marginal Range	165-203		14-16	17-19	31-37	35-43					
High Range	204-254		17-19	20-24	38-44	44-54					
Abnormal	255+		20+	25+	45+	55+					
Abnormal Trend (PPM Increase in 10 Hrs)											

TECHNICAL INFORMATION

APPLICABLE END ITEMS

250RPV, ARTFT6, M320RT, MLT6, MLT6-2, MLT6CH, RS28

This Page Intentionally Left Blank

COMPONENT: **DETROIT DIESEL ALLISON 4057C (ENGINE)**

LUBRICANT:

	Fe	Ag	Al	Cr	Cu	Si	Sn	Ni	Pb	Mo	Mg
Normal Range	0-270		0-20	0-52	0-54	0-77	0-31		0-47		
Marginal Range	271-332		21-25	53-64	55-66	78-95	32-39		48-57		
High Range	333-415		26-31	65-80	67-83	96-118	40-48		58-72		
Abnormal	416+		32+	81+	84+	119+	49+		73+		
Abnormal Trend (PPM Increase in 10 Hrs)	83		6	16	17	24	10		14		

TECHNICAL INFORMATION

AVERAGE:	Fe=122	Mg=466	Sn=9
	Ag=1	Na=42	Ti=1
	Al=6	Ni=1	B=75
	Cr=20	Pb=18	Mo=1
	Cu=18	Si=24	Zn=636

APPLICABLE END ITEMS

440 HA

This Page Intentionally Left Blank

COMPONENT: **DETROIT DIESEL ALLISON 6V53/T (ENGINE)**

LUBRICANT: **MIL-L-2104**

	Fe	Ag	Al	Cr	Cu	Si	Sn	Ni	Pb	Mo	Mg
Normal Range	0-90	0-2	0-6	0-5	0-21	0-25	0-25		0-25	0-5	
Marginal Range	91-120	3	7-8	6-7	22-31	26-34	26-37		26-35	6-7	
High Range	121-150	3-4	9-10	8-9	32-41	35-45	38-49		36-45	8-9	
Abnormal	151+	5+	11+	10+	42+	46+	50+		46+	10+	
Abnormal Trend (PPM Increase in 10 Hrs)	30	2	3	3	8	9	10		9	3	

TECHNICAL INFORMATION

A faulty air induction system is normally a significant source of silicon in engine oil. Antifoaming agents in engine oil normally contain silicone which will give 3 to 7 PPM in new oil. Silicone is used in "Print-O-Seal" cylinder head gaskets and crankshaft seals for this engine which will normally show 20 to 30 PPM silicon in the oil. Aluminum and cast iron parts in the engine can have significant amounts of silicon in their composition.

Significant wear can be expected on the piston skirts and cylinder liners for this engine.

The engine is liquid-cooled; therefore, ethylene glycol present in the engine oil would indicate a leak in the coolant system.

Copper-Lead-Tin-Zinc (Cu-Pb-Sn-Zn)	Wear of many bushings, bearings, and thrust washers.

APPLICABLE END ITEMS

1500M, 7500, F1500M, H446A, LAV-25, M1015, M106A1, M106A1, M106A2, M113A1, M113A2, M125A1, M125A2, M132A1, M163, M163A1, M548, M548A1, M551, M551A1, M577A1, M577A2, M667, M688, M730, M730A1, M730A2, M741, M741A1, M752, M878A1, M901, M901A1, M981, MHE215, MT250, RMS-250, RMS-250, RTL10, RTL10-1

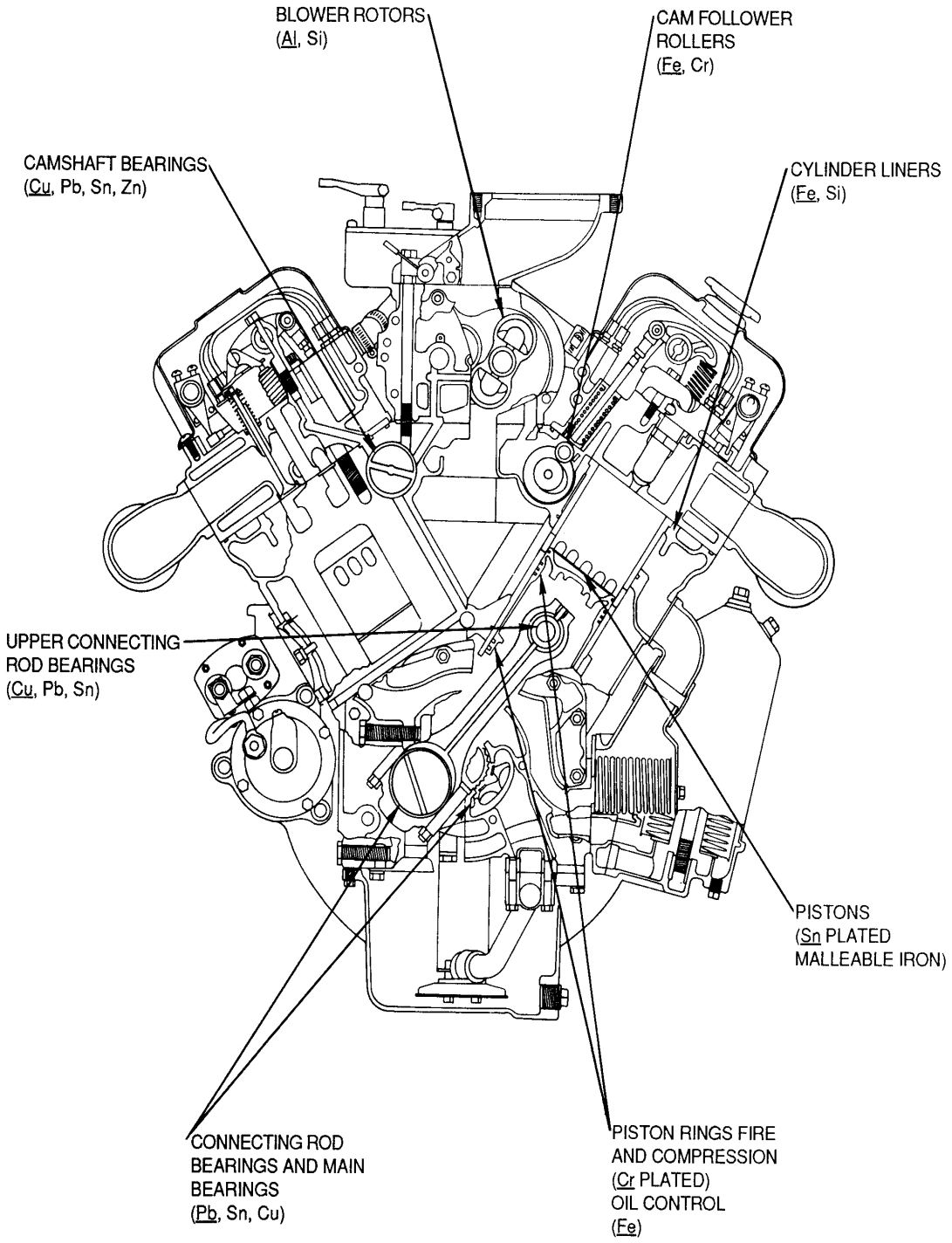

FIGURE 1. Detroit Diesel Allison 6V53/T

COMPONENT: **DETROIT DIESEL ALLISON 8V53T (ENGINE)**

LUBRICANT: **MIL-L-2104**

	Fe	Ag	Al	Cr	Cu	Si	Sn	Ni	Pb	Mo	Mg
Normal Range	0-100	0-3	0-30	0-10	0-30	0-30	0-30	0-3	0-30	0-3	
Marginal Range	101-150	4-5	31-50	11-20	31-50	31-50	31-50	4-5	31-50	4-5	
High Range	151-200	6-10	51-60	21-30	51-70	51-70	51-70	6-10	51-70	6-10	
Abnormal	201+	11+	61+	31+	71+	71+	71+	11+	71+	7+	
Abnormal Trend (PPM Increase in 10 Hrs)											

TECHNICAL INFORMATION

APPLICABLE END ITEMS

LVTC-7, LVTP-7, LVTR-7

This Page Intentionally Left Blank

COMPONENT: DETROIT DIESEL ALLISON 8V71T (ENGINE)

LUBRICANT: MIL-L-2104

	Fe	Ag	Al	Cr	Cu	Si	Sn	Ni	Pb	Mo	Mg
Normal Range	0-123	0-6	0-18	0-22	0-47	0-40	0-43		0-27	0-2	
Marginal Range	124-170	7	19-27	23-33	48-67	41-55	44-62		28-38	3-4	
High Range	171-215	8-10	28-36	34-44	68-88	56-75	63-81		39-49	5-6	
Abnormal	216+	11+	37+	45+	89+	76+	82+		50+	7+	
Abnormal Trend (PPM Increase in 10 Hrs)	43	3	7	9	17	15	16		10	2	

TECHNICAL INFORMATION

A faulty air induction system is normally a significant source of silicon in engine oil. Antifoaming agents in engine oil normally contain silicone which will give 3 to 7 PPM in new oil. Silicone is used in "Print-O-Seal" cylinder head gaskets and crankshaft seals for this engine which will normally show 20 to 30 PPM silicon in the oil. Aluminum and cast iron parts in the engine can have significant amounts (up to 10 percent) of silicon in their composition.

Significant wear can be expected on the piston skirts and cylinder liners for this engine.

The engine is liquid-cooled; therefore, ethylene glycol present in the engine oil would indicate a leak in the coolant system.

Chromium (Cr)	Oil control rings and first compression ring are chrome plated.
Tin (Sn)	Plating on pistons.
Iron (Fe)	Wear of cylinder walls. Wear of numerous other engine parts. Also from machining chips left in engine.
Lead-Tin-Copper (Pb-Sn-Cu)	Crankshaft bearings, both connecting rods, and mains. Wear of many bushings, bearings, and thrust washers.
Copper-Lead-Tin-Zinc (Cu-Pb-Sn-Zn)	Wear of many bushings.
Aluminum-Silicon-Cadmium (Al-Si-Cd)	Upper connecting rod bearing shell and No. 7 main bearing washers.

APPLICABLE END ITEMS

175B, BRIDGE-MA, M107, M108, M109, M109A1, M109A2, M109A3, M110, M110A2, M578, M992, XM1050

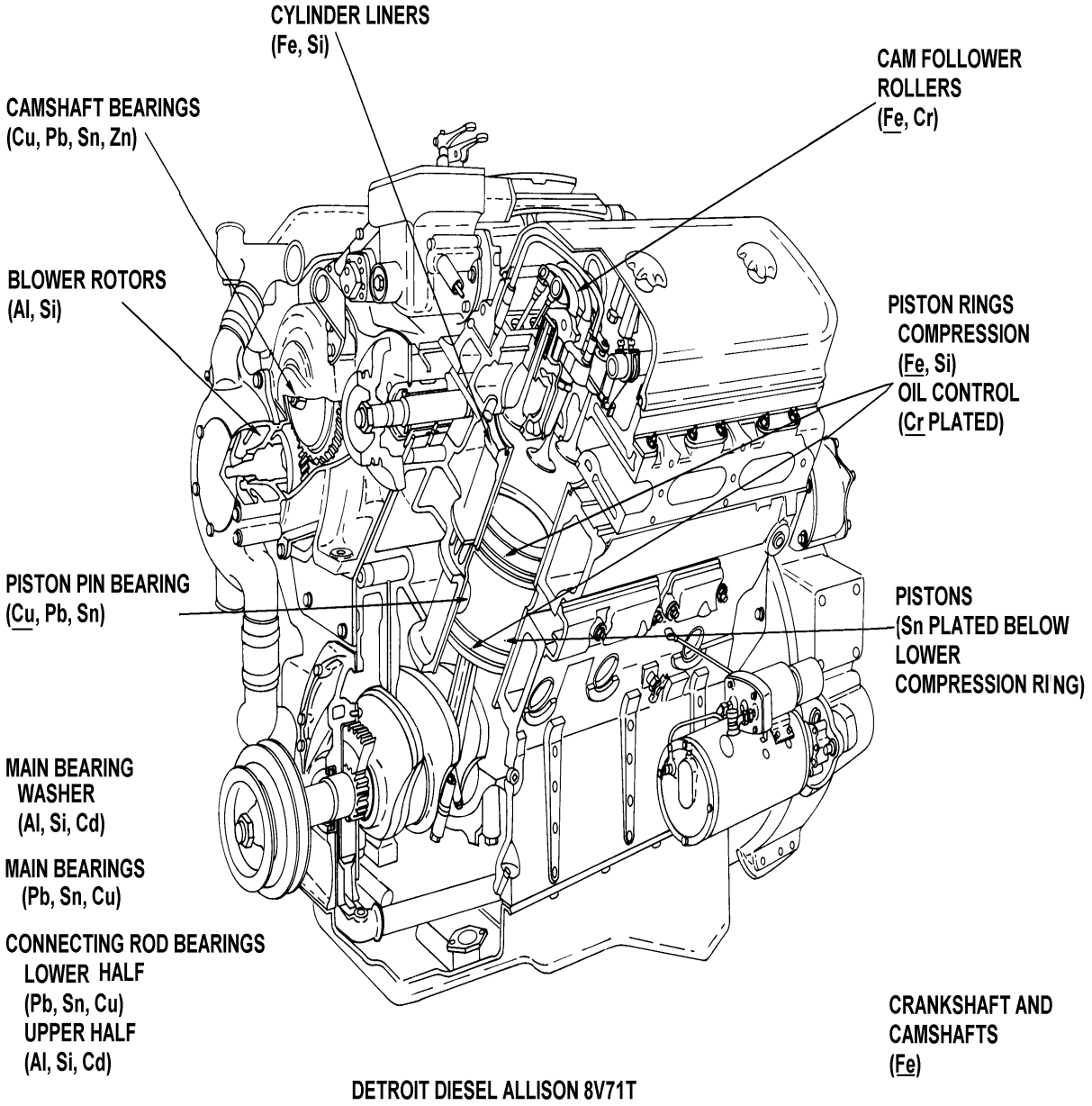

FIGURE 1. Detroit Diesel Allison 8V71T

COMPONENT: **DETROIT DIESEL ALLISON 8V92T (ENGINE)**

LUBRICANT: **MIL-L-2104**

	Fe	Ag	Al	Cr	Cu	Si	Sn	Ni	Pb	Mo	Mg
Normal Range	0-201		0-16	0-25	0-70	0-67	0-54	0-6	0-53	0-13	
Marginal Range	202-247		17-19	26-31	71-86	68-83	55-66	7-8	54-65	14-17	
High Range	248-309		20-24	32-38	87-107	84-104	67-83	9-10	66-82	18-21	
Abnormal	310+		25+	39+	108+	105+	84+	11+	83+	22+	
Abnormal Trend (PPM Increase in 10 Hrs)	25		2	3	5	4	4	2	4	2	

TECHNICAL INFORMATION

A faulty air induction system is normally a significant source of silicon in engine oil. Antifoaming agents in engine oil normally contain silicone which will give 3 to 7 PPM in new oil. Silicone is used in "Print-O-Seal" cylinder head gaskets and crankshaft seals for this engine which will normally show 20 to 30 PPM silicon in the oil. Aluminum and cast iron parts in the engine have significant amounts of silicon in their composition.

Significant wear can be expected on the piston skirts and cylinder liners for this engine.

The engine is liquid-cooled; therefore, ethylene glycol present in the engine oil would indicate a leak in the coolant system.

APPLICABLE END ITEMS

M977, M978, M983, M984, M985

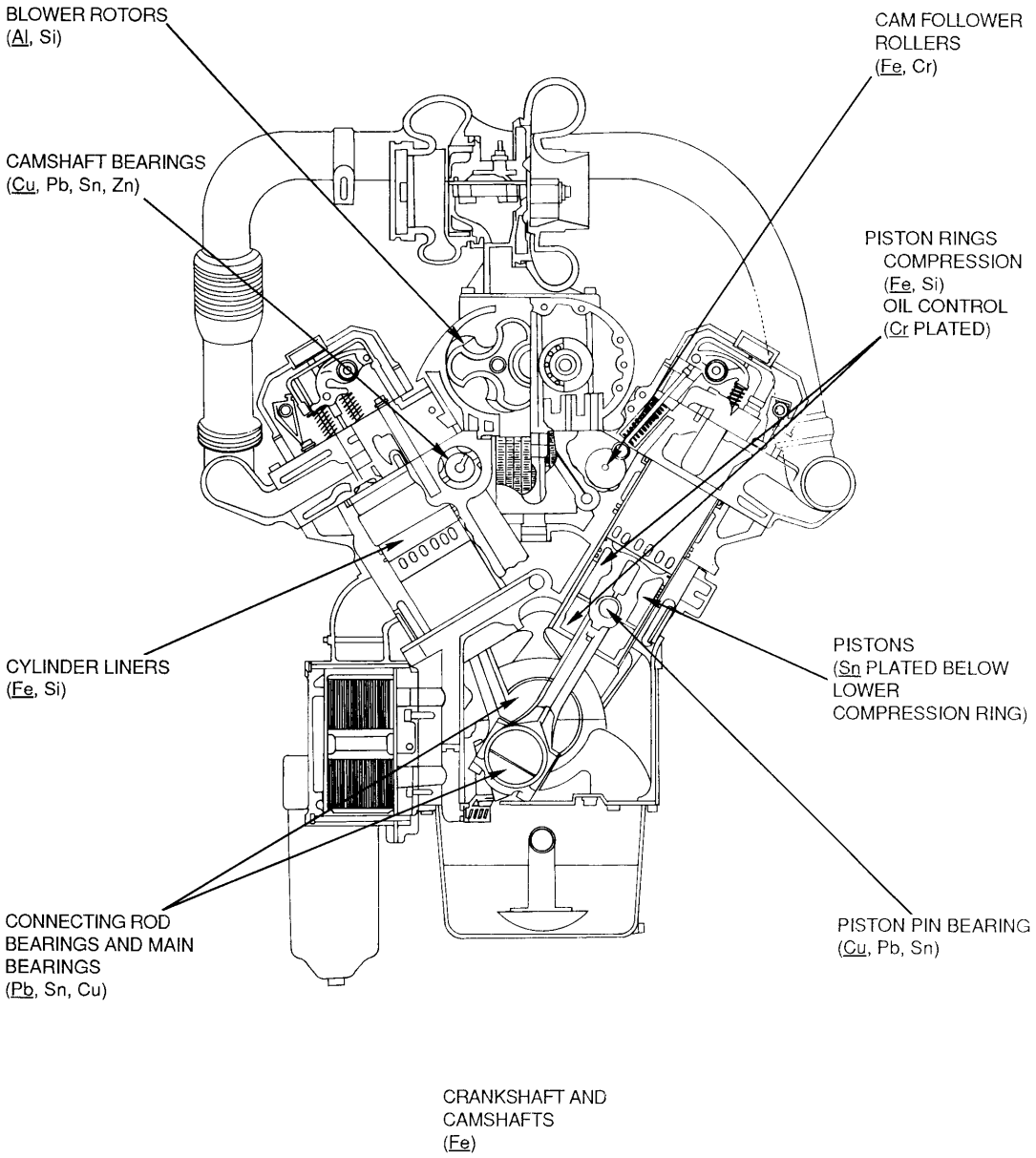

FIGURE 1. Detroit Diesel Allison 8V92T

COMPONENT: **DETROIT DIESEL ALLISON 12V71T (ENGINE)**

LUBRICANT: **MIL-L-2104**

	Fe	Ag	Al	Cr	Cu	Si	Sn	Ni	Pb	Mo	Mg
Normal Range	0-135	0-6	0-27	0-12	0-30	0-45	0-45	0-3	0-60	0-3	
Marginal Range	136-166	7	28-33	13-14	31-37	46-55	46-55	4	61-73	4	
High Range	167-207	8-9	34-42	15-18	38-46	56-69	56-69	5	74-92	5	
Abnormal	208+	10+	43+	19+	47+	70+	70+	6+	93+	6+	
Abnormal Trend (PPM Increase in 10 Hrs)	18	2	2	2	3	3	4	2	4	2	

TECHNICAL INFORMATION

A faulty air induction system is normally a significant source of silicon in engine oil. Antifoaming agents in engine normally contain silicone which will give 3 to 7 PPM in new oil. Silicone is used in "Print-O-Seal" cylinder head gaskets and crankshaft seals for engine which normally show 20 to 30 PPM silicone in the oil. Aluminum and cast iron parts in the engine can have significant amounts (up to 10 percent) of silicon in their composition.

Significant wear can be expected on the piston skirts and cylinder liners for this engine.

The engine is liquid-cooled; therefore, ethylene glycol present in the engine oil would indicate a leak in the coolant system.

Chromium (Cr)	Oil control piston ring faces are chrome plated.
Tin (Sn)	Plating on pistons.
Iron (Fe)	Wear of cylinder walls. Wear of numerous other engine parts. Also from machining chips left in engine.
Lead-Tin-Copper (Pb-Sn-Cu)	Crankshaft bearings, both mains and connecting rods. Wear of piston rings and crankshaft thrust washer.
Copper-Lead-Tin-Zinc (Cu-Pb-Sn-Zn)	Wear of many bushings.
Aluminum-Silicon-Cadmium (Al-Si-Cd)	Upper connecting rod bearing shell and No. 7 main bearing washer.

APPLICABLE END ITEMS

M746

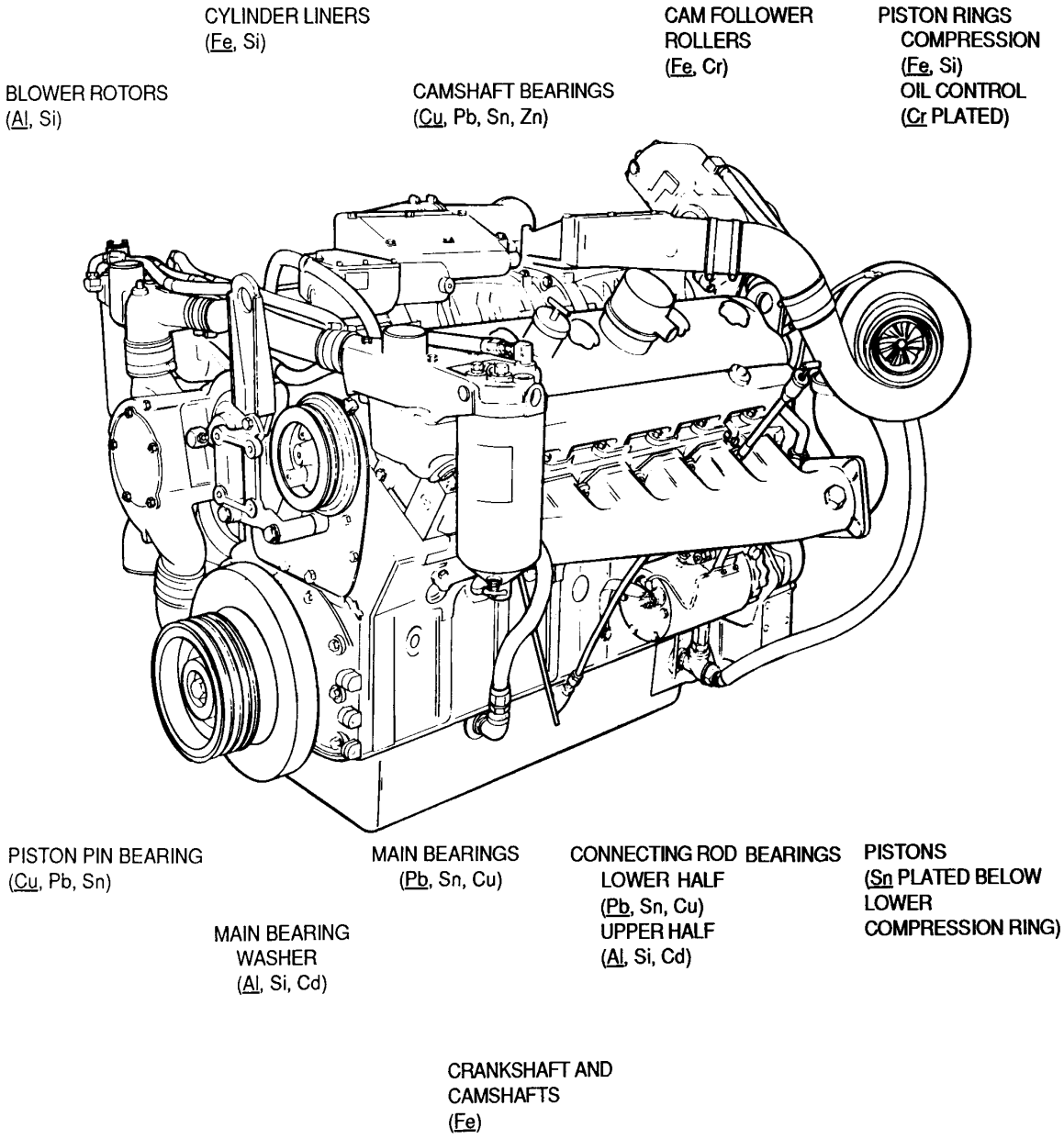

FIGURE 1. Detroit Diesel Allison 12V71T

COMPONENT: **ELECTRO MOTIVE DIVISION 8-567B (ENGINE)**

LUBRICANT:

	Fe	Ag	Al	Cr	Cu	Si	Sn	Ni	Pb	Mo	Mg
Normal Range	0-42	0-38	0-3		0-128	0-14	0-4		0-38		
Marginal Range	43-52	39-47	4		129-158	15-18	5-6		39-47		
High Range	53-65	48-58	5		159-197	19-22	7		48-58		
Abnormal	66+	59+	6+		198+	23+	8+		59+		
Abnormal Trend (PPM Increase in 10 Hrs)	13	12	2		39	4	2		12		

TECHNICAL INFORMATION

AVERAGE:	Fe=19	Mg=452	Sn=1
	Ag=9	Na=27	Ti=1
	Al=1	Ni=1	B=47
	Cr=1	Pb=13	Mo=1
	Cu=42	Si=7	Zn=570

APPLICABLE END ITEMS

LOCO 100 T

This Page Intentionally Left Blank

COMPONENT: **ELECTRO MOTIVE DIVISION 16-645E/E6 (ENGINE)**

LUBRICANT:

	Fe	Ag	Al	Cr	Cu	Pb	Sn	Ni	Si	Mo	Mg
Normal Range	1-20	0	1-9	1-20	1-19	1-10	1-9	1-3	1-15		
Marginal Range	21-25	1	10-12	21-25	20-35	11-15	10-12	4-5	16-17		
High Range	16-30	2	13-14	26-30	36-50	16-20	13-14	6	18-20		
Abnormal	31+	3+	15+	31+	51+	21+	15+	7+	21+		
Abnormal Trend (PPM Increase in 10 Hrs)											

TECHNICAL INFORMATION

Sodium (Na)	Evaluation is required when sodium increases 35-50 PPM above new oil. Greater than 50 PPM over the Na concentration in new oil is considered normal.
Zinc (Zn)	Zinc concentrations of 1-10 PPM are acceptable. Greater than 10 PPM is considered abnormal.

NOTE

All LSVs and LOCO GP-10/11s have chrome, rather than steel, liners.

APPLICABLE END ITEMS

LSV, LOCO GP-10/11

This Page Intentionally Left Blank

COMPONENT: **FAIRBANKS MORSE 38D-81/8 (ENGINE)**

LUBRICANT:

	Fe	Ag	Al	Cr	Cu	Si	Sn	Ni	Pb	Mo	Mg
Normal Range	0-102		0-9	0-10	0-31	0-17			0-19		
Marginal Range	103-126		10-11	11-13	32-38	18-21			20-23		
High Range	127-157		12-14	14-16	39-47	22-26			24-29		
Abnormal	158+		15+	17+	48+	27+			30+		
Abnormal Trend (PPM Increase in 10 Hrs)	31		3	4	9	5			5		

TECHNICAL INFORMATION

AVERAGE:	Fe=54	Mg=203	Sn=1
	Ag=1	Na=39	Ti=1
	Al=3	Ni=1	B=31
	Cr=1	Pb=5	Mo=1
	Cu=6	Si=8	Zn=227

APPLICABLE END ITEMS

LOCO 120 T

This Page Intentionally Left Blank

COMPONENT: INTERNATIONAL HARVESTER DT-466B (ENGINE)

LUBRICANT:

	Fe	Ag	Al	Cr	Cu	Si	Sn	Ni	Pb	Mo	Mg
Normal Range	0-182		0-18	0-29	0-243	0-47	0-10		0-55		
Marginal Range	183-224		19-23	30-35	244-300	48-58	11-12		56-68		
High Range	225-280		24-28	36-44	301-374	59-72	13-15		69-85		
Abnormal	281+		29+	45+	375+	73+	16+		86+		
Abnormal Trend (PPM Increase in 10 Hrs)	56		6	9	75	14	4		17		

TECHNICAL INFORMATION

AVERAGE:	Fe=74	Mg=477	Sn=2
	Ag=1	Na=39	Ti=1
	Al=8	Ni=1	B=54
	Cr=9	Pb=19	Mo=1
	Cu=86	Si=17	Zn=752

APPLICABLE END ITEMS

M10A

This Page Intentionally Left Blank

COMPONENT: JOHN DEERE 6059T-DW-04 5.9 LITER (ENGINE)

LUBRICANT:

	Fe	Ag	Al	Cr	Cu	Si	Pb	Sn	Na	Mo	Mg
Normal Range	0-60		0-1	0-1	0-10	0-1	0-10				
Marginal Range	61-75		2-10	2-4	11-25	2-15	11-25				
High Range	76-150		11-20	5-8	26-40	16-21	26-40				
Abnormal	151+		21+	9+	41+	22+	41+				
Abnormal Trend (PPM Increase in 10 Hrs)											

TECHNICAL INFORMATION

APPLICABLE END ITEMS

MW24B, MW24C

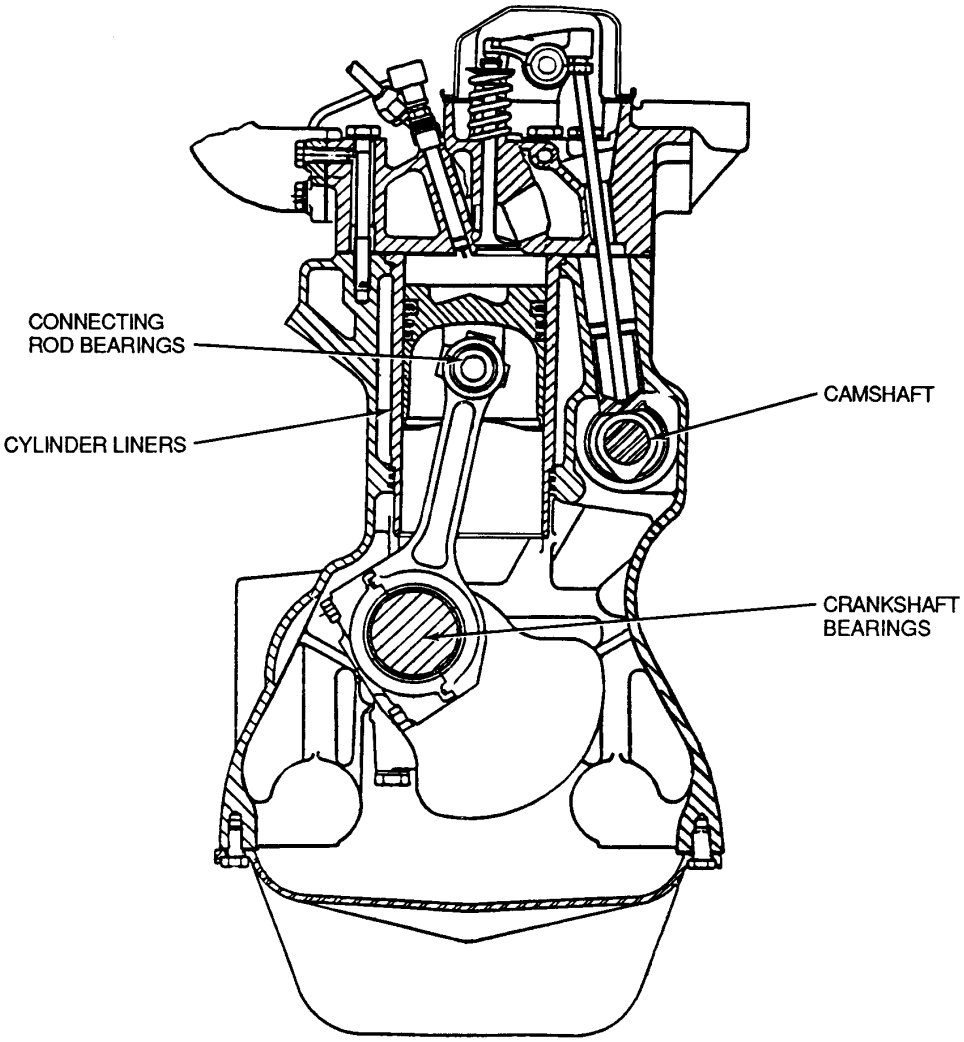

FIGURE 1. John Deere 6059T-DW-04 5.9 Liter Engine - Sectional View

COMPONENT: **LYCOMING AGT 1500 TURBINE (ENGINE)**

LUBRICANT: **MIL-L-23699**

	Fe	Ag	Al	Cr	Cu	Si	Ti	Ni	Pb	Mo	Zn
Normal Range	0-14	0-3	0-3	0-1	0-3	0-32	0-2	0-1	0-3	04	0-13
Marginal Range	15-16	4	4	2	4	33-38	3	2	4	5	14-16
High Range	17-20	5	5	3	5	39-50	4	3	5	6-7	17-19
Abnormal	21+	6+	6+	4+	6+	51+	5+	4+	6+	8+	20+
Abnormal Trend (PPM Increase in 10 Hrs)	4	2	2	2	2	10	2	2	2	2	4

TECHNICAL INFORMATION

Engine oil is employed for cooling alternator.

Engine oil-wetted splines are used in accessory and reduction gearboxes (AGB and RGB).

Low levels (13 PPM) of zinc (Zn) may indicate use of galvanized containers for handling engine oil. This is harmless.

Over 75 PPM Zn with calcium (Ca), magnesium (Mg), or barium (Ba) present indicates transmission oil mixed with engine oil. Up to 10 percent transmission oil in engine oil can be tolerated indefinitely.

External sources should be considered first when attempting to explain Zn levels.

Iron (Fe) is by far the most important wear metal to monitor.

APPLICABLE END ITEMS

M1, M1E1

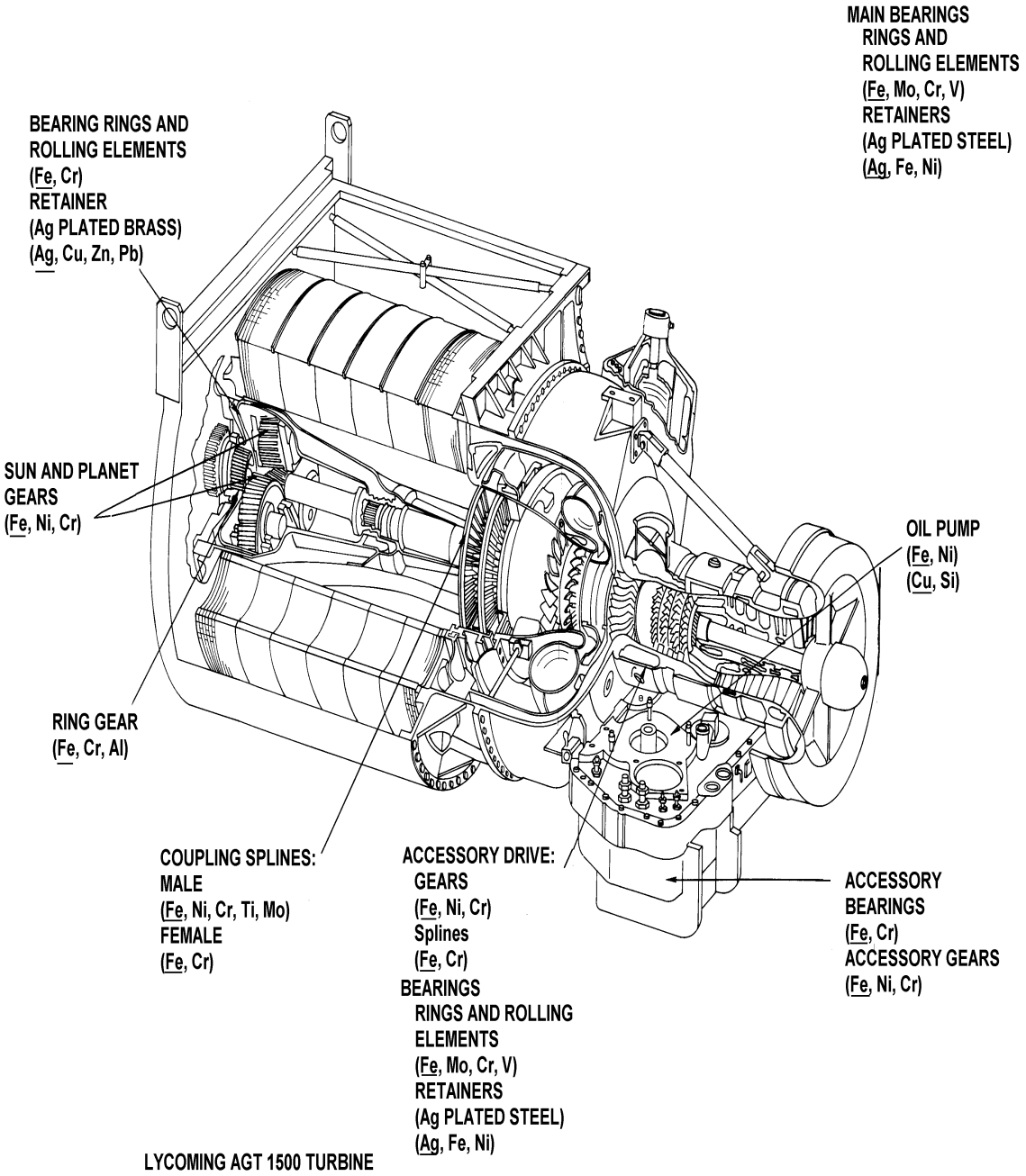

LYCOMING AGT 1500 TURBINE

COMPONENT: **MACK ENDT-673 (ENGINE)**

LUBRICANT: **MIL-L-2104**

	Fe	Ag	Al	Cr	Cu	Si	Sn	Ni	Pb	Mo	Mg
Normal Range	0-220		0-27	0-23	0-57	0-43	0-13	0-4	0-77	0-25	
Marginal Range	221-271		28-33	24-28	58-70	44-53	14-15	5	78-94	26-31	
High Range	272-339		34-41	29-35	71-88	54-67	16-19	6	95-118	32-39	
Abnormal	340+		42+	36+	89+	68+	20+	7+	119+	40+	
Abnormal Trend (PPM Increase in 10 Hrs)	15		3	3	4	4	2	2	7	3	

TECHNICAL INFORMATION

APPLICABLE END ITEMS

M246A1, M328A1, M51A1, M52A1, M543A1, M54A1, M54A1C, M55A1, M748A1, W15A

This Page Intentionally Left Blank

COMPONENT: **MAN D-2840 (ENGINE)**

LUBRICANT: **MIL-L-2104**

	Fe	Ag	Al	Cr	Cu	Si	Sn	Ni	Pb	Mo	Mg
Normal Range	0-129	0-1	0-14	0-36	0-30	0-15	0-9		0-54		
Marginal Range	130-159		15-18	37-45	31-37	16-18	10-11		55-67		
High Range	160-198	2	19-22	46-56	38-46	19-23	12-14		68-83		
Abnormal	199+	3+	23+	57+	47+	24+	15+		84+		
Abnormal Trend (PPM Increase in 10 Hrs)	40	2	4	11	9	4	3		17		

TECHNICAL INFORMATION

APPLICABLE END ITEMS

M1001, M1002, M1013, M1014

This Page Intentionally Left Blank

COMPONENT: **MERCEDES BENZ OM617952 (ENGINE)**

LUBRICANT: **MIL-L-2104**

	Fe	Ag	Al	Cr	Cu	Si	Sn	Ni	Pb	Mo	Mg
Normal Range	0-243		0-25	0-17	0-84	0-45			0-17	0-25	
Marginal Range	244-300		26-30	18-21	85-103	46-55			18-21	26-30	
High Range	301-375		31-38	22-27	104-129	56-69			22-26	31-38	
Abnormal	376+		39+	28+	130+	70+			27+	39+	
Abnormal Trend (PPM Increase in 10 Hrs)	75		8	5	26	14			5	8	

TECHNICAL INFORMATION

AVERAGE:	Fe=134	Mg=528	Sn=4
	Ag=1	Na=34	Ti=1
	Al=12	Ni=5	B=62
	Cr=10	Pb=10	Mo=11
	Cu=35	Si=19	Zn=846

APPLICABLE END ITEMS

M973

This Page Intentionally Left Blank

COMPONENT: **C-180 (ENGINE)**

LUBRICANT:

	Fe	Ag	Al	Cr	Cu	Si	Sn	Ni	Pb	Mo	Mg
Normal Range	0-104		0-10	0-10	0-86	0-20			0-67		
Marginal Range	105-127		11-13	11-12	87-106	21-24			68-83		
High Range	128-159		14-16	13-15	107-132	25-31			84-104		
Abnormal	160+		17+	16+	133+	32+			105+		
Abnormal Trend (PPM Increase in 10 Hrs)	32		4	4	26	6			21		

TECHNICAL INFORMATION

AVERAGE:	Fe=37	Mg=509	Sn=1
	Ag=1	Na=50	Ti=1
	Al=3	Ni=1	B=57
	Cr=3	Pb=14	Mo=1
	Cu=23	Si=7	Zn=541

APPLICABLE END ITEMS

SF60 MD

This Page Intentionally Left Blank

COMPONENT: **GTCP 85127**

LUBRICANT:

	Fe	Ag	Al	Cr	Cu	Si	Sn	Ni	Pb	Mo	Mg
Normal Range	9		2	2	3	4	6		7		
Marginal Range	0-30		0-4	0-5	0-8	0-13	0-19		0-22		
High Range	30-37		5	6-7	9-10	14-16	20-24		23-27		
Abnormal	38-46		6	8	11-13	17-20	25-29		28-34		
Abnormal Trend (PPM Increase in 10 Hrs)	47+		7+	9+	14+	21+	30+		35+		

TECHNICAL INFORMATION

APPLICABLE END ITEMS

PPU85-4, PPU85-5, LPU-71, LPC-71W, APP-1, JHTWX1096

This Page Intentionally Left Blank

COMPONENT: SD802 (ENGINE)

LUBRICANT:

	Fe	Ag	Al	Cr	Cu	Si	Sn	Ni	Pb	Mo	Mg
Normal Range	0-250		0-52	0-26	0-151	0-128	0-12		0-41		
Marginal Range	251-308		53-64	27-32	152-185	129-157	13-15		42-50		
High Range	309-385		65-80	33-41	186-232	158-196	16-19		51-63		
Abnormal	386+		81+	42+	233+	197+	20+		64+		
Abnormal Trend (PPM Increase in 10 Hrs)	77		16	8	46	39	4		13		

TECHNICAL INFORMATION

AVERAGE:	Fe=78	Mg=519	Sn=2
	Ag=1	Na=49	Ti=1
	Al=9	Ni=1	B=69
	Cr=6	Pb=16	Mo=1
	Cu=33	Si=21	Zn=688

APPLICABLE END ITEMS

5157B, 5230B, 4180

This Page Intentionally Left Blank

COMPONENT: **CATERPILLAR D5/3T 3394 (TRANSMISSION)**

LUBRICANT: **MIL-L-2104**

	Fe	Ag	Al	Cr	Cu	Si	Sn	Ni	Pb	Mo	Mg
Normal Range	0-224	0-1	0-6	0-4	0-223	0-75	0-4		0-91		
Marginal Range	225-276		7	5	224-274	76-92	5		92-112		
High Range	277-345		8-9	6-7	275-343	93-115	6		113-140		
Abnormal	346+	2+	10+	8+	344+	116+	7+		141+		
Abnormal Trend (PPM Increase in 10 Hrs)	69	2	3	2	69	23	2		28		

TECHNICAL INFORMATION

APPLICABLE END ITEMS

D5BS, D5BNS

This Page Intentionally Left Blank

COMPONENT: CATERPILLAR POWERSHIFT 4R219 (TRANSMISSION)

LUBRICANT: MIL-L-2104

	Fe	Ag	Al	Cr	Cu	Si	Sn	Ni	Pb	Mo	Mg
Normal Range	0-74		0-8		0-130	0-38	0-3		0-51		
Marginal Range	75-92		9-10		131-160	39-47	4		52-62		
High Range	93-114		11-13		161-200	48-59	5		63-78		
Abnormal	115+		14+		201+	60+	6+		79+		
Abnormal Trend (PPM Increase in 10 Hrs)	7		2		12	3	3		4		

TECHNICAL INFORMATION

APPLICABLE END ITEMS

M520, M553, M559, M877

This Page Intentionally Left Blank

COMPONENT: **CATERPILLAR 5R3855 (TRANSMISSION)**

LUBRICANT:

	Fe	Ag	Al	Cr	Cu	Si	Sn	Ni	Pb	Mo	Mg
Normal Range	0-54		0-9		0-241	0-63			0-40		
Marginal Range	55-67		10-11		242-297	64-77			41-50		
High Range	68-83		12-14		298-371	78-97			51-62		
Abnormal	84+		15+		372+	98+			63+		
Abnormal Trend (PPM Increase in 10 Hrs)	17		3		74	19			12		

TECHNICAL INFORMATION

AVERAGE:	Fe=27	Mg=252	Sn=1
	Ag=1	Na=24	Ti=1
	Al=4	Ni=1	B=26
	Cr=1	Pb=6	Mo=1
	Cu=58	Si=15	Zn=747

APPLICABLE END ITEMS

D63, DV43 (MHE 240)

This Page Intentionally Left Blank

COMPONENT: **CATERPILLAR D7155 (TRANSMISSION)**

LUBRICANT: **MIL-L-2104**

	Fe	Ag	Al	Cr	Cu	Si	Sn	Ni	Pb	Mo	Mg
Normal Range	20-100		5-15	0-2	0-3	5-15					
Marginal Range	101-200		16-30	3-6	4-7	16-30					
High Range	201-300		31-45	7-10	8-10	31-50					
Abnormal	301+		46+	11+	11+	51+					
Abnormal Trend (PPM Increase in 10 Hrs)	60		9	3	3	10					

TECHNICAL INFORMATION

Silicone additives may be used for antifoaming agents in the lubricating oil, thus new oil normally gives a reading of 3 to 7 PPM silicon. Springs used in clutches for the transmission may have silicone coatings. This will result in high silicon readings on new or rebuilt equipment. Also, the transmission will normally show high iron readings during the break-in period.

The transmission is air-cooled; therefore, there should be no ethylene glycol contamination problems.

APPLICABLE END ITEMS

M915, M916, M917, M918, M919, M920

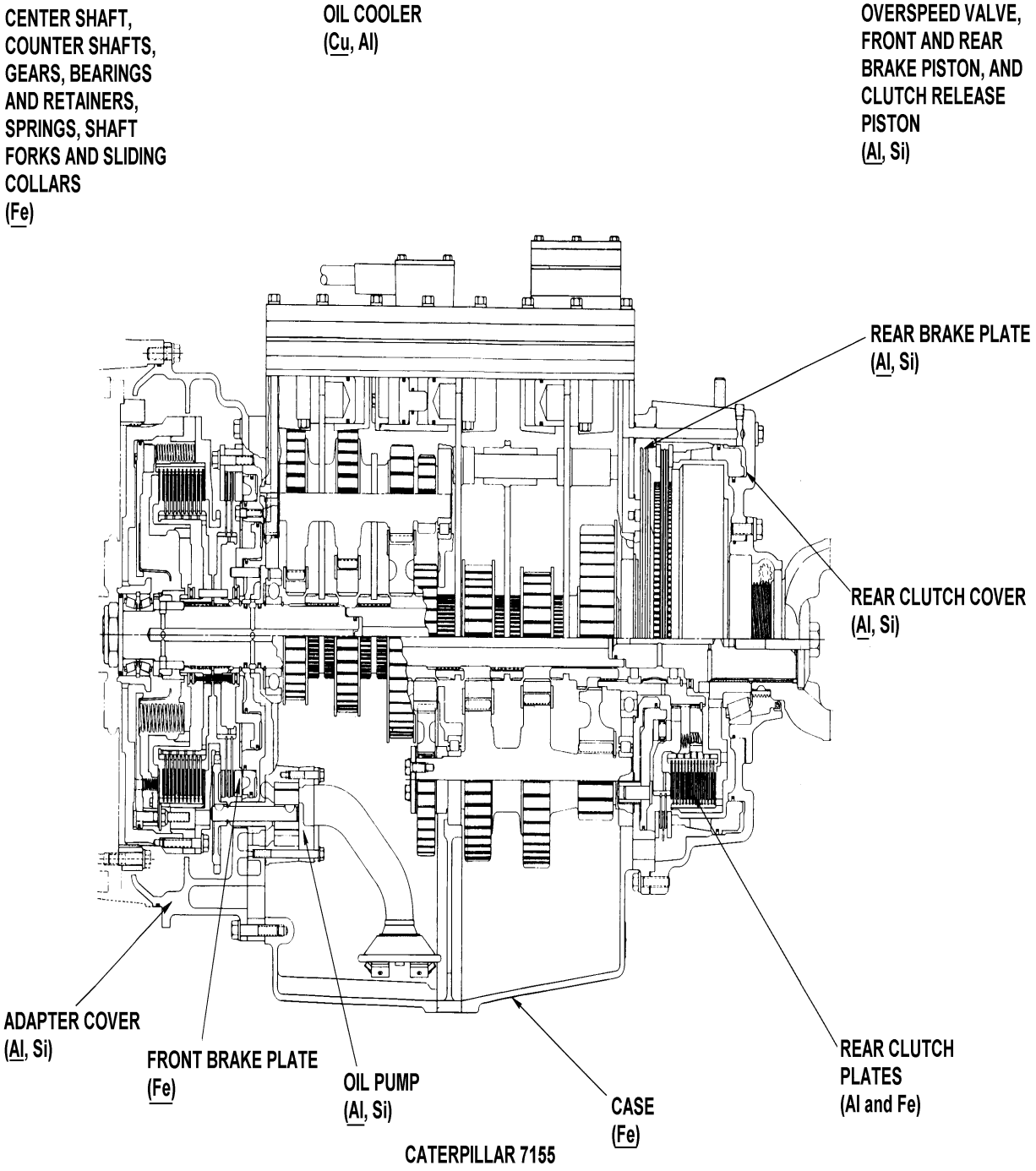
CENTER SHAFT, COUNTER SHAFTS, GEARS, BEARINGS AND RETAINERS, SPRINGS, SHAFT FORKS AND SLIDING COLLARS (Fe)
OIL COOLER (Cu, Al)
OVERSPEED VALVE, FRONT AND REAR BRAKE PISTON, AND CLUTCH RELEASE PISTON (Al, Si)
REAR BRAKE PLATE (Al, Si)
REAR CLUTCH COVER (Al, Si)
ADAPTER COVER (Al, Si)
FRONT BRAKE PLATE (Fe)
OIL PUMP (Al, Si)
CASE (Fe)
REAR CLUTCH PLATES (Al and Fe)
CATERPILLAR 7155

COMPONENT: **CLARK 4000 (TRANSMISSION)**

LUBRICANT: **MIL-L-2104**

	Fe	Ag	Al	Cr	Cu	Si	Sn	Ni	Pb	Mo	Mg
Normal Range	0-149	0-2	0-43	0-8	0-364	0-90	0-9		0-16		
Marginal Range	150-183	3	44-53	9-10	365-448	91-110	1-11		17-20		
High Range	184-229		54-66	11-12	449-560	111-138	12-14		21-25		
Abnormal	230+	4+	67+	13+	561+	139+	15+		26+		
Abnormal Trend (PPM Increase in 10 Hrs)	46	2	13	3	112	28	3		5		

TECHNICAL INFORMATION

APPLICABLE END ITEMS

175B

This Page Intentionally Left Blank

COMPONENT: DETROIT DIESEL ALLISON 3331-1 (TRANSMISSION)

LUBRICANT:

	Fe	Ag	Al	Cr	Cu	Si	Sn	Ni	Pb	Mo	Mg
Normal Range	0-94		0-17		0-236	0-35	0-16		0-231		
Marginal Range	95-116		18-21		237-291	36-44	17-19		232-284		
High Range	117-154		22-27		292-363	45-55	20-24		285-355		
Abnormal	155+		28+		364+	56+	25+		356+		
Abnormal Trend (PPM Increase in 10 Hrs)	29		5		73	11	4		71		

TECHNICAL INFORMATION

APPLICABLE END ITEMS

MLT6, MLT6CH, ARTFT6

This Page Intentionally Left Blank

COMPONENT: DETROIT DIESEL ALLISON CD 850 6A (TRANSMISSION)

LUBRICANT: MIL-L-2104

	Fe	Ag	Al	Cr	Cu	Si	Sn	Ni	Pb	Mo	Mg
Normal Range	0-150	0-15	0-13	0-5	0-180	0-28	0-13		0-100		
Marginal Range	151-205	16-22	14-18	6-7	181-255	29-36	14-18		101-140		
High Range	206-260	23-30	19-25	8-9	256-325	37-45	19-25		141-175		
Abnormal	261+	31+	26+	10+	326+	46+	26+		176+		
Abnormal Trend (PPM Increase in 10 Hrs)	52	6	5	3	65	9	5		35		

TECHNICAL INFORMATION

When silver (Ag) and iron (Fe) are increasing excessively and at approximately the same rate, the silver-plated bushings (Part No. 7539858) in the steer differential pinion are wearing excessively. When silver (Ag) only is rapidly increasing, the silver-plated seal ring (Part No. 8352004) in the main oil pump may be wearing excessively, and the pump pressure should be monitored closely.

Some of the brake and clutch plates in the transmission are sintered bronze. When the iron and copper in the transmission are increasing at approximately the same rate, the plates may need adjustment, but are probably in good condition. On the other hand, if the iron wear rate exceeds the copper wear rate, the plates are probably worn excessively, and the transmission may fail. This is because the plates are worn through and the iron is coming from the backing plates. In a new transmission, the copper may run as high as 300 PPM with a much lower iron count until the transmission has worn-in and the fluid has been changed.

When the rear main oil seal in the AVDS 1790 engine wears excessively or ceases to function properly, there will be cross-contamination of the engine and transmission (CD-850-6A) lubricants. This, in general, will be indicated by increasing or high molybdenum (Mo) in the transmission oil samples and high copper and lead in the engine oil samples.

Transmission is air-cooled; therefore, no liquid-coolant contamination problems.

Wear of bushings is normally minimal.

Aluminum-Silicon (Al-Si)	Turbine converter, and first stator wear. Could also be derived from machining chips left in transmission. Aluminum particles are commonly found in pan.
Silicon (Si)	Aluminum and cast iron parts have significant amounts of silicon in their composition.
Silver (Ag)	Silver-plated oil seals and silver-plated planetary gear bushings.

Copper (Cu)	Brake and clutch plates contribute significant amounts of copper, especially in new or newly rebuilt transmission.
Copper-Lead-Tin (Cu-Pb-Sn)	Bushings.
Copper-Lead-Tin-Zinc (Cu-Pb-Sn-Zn)	Thrust washers.
Iron (Fe)	Wear of numerous transmission parts. Also machining chips left in transmission.

APPLICABLE END ITEMS

AVLB, M247, M48A2, M48A3, M48A5, M60, M60A1, M60A2, M60A3, M728

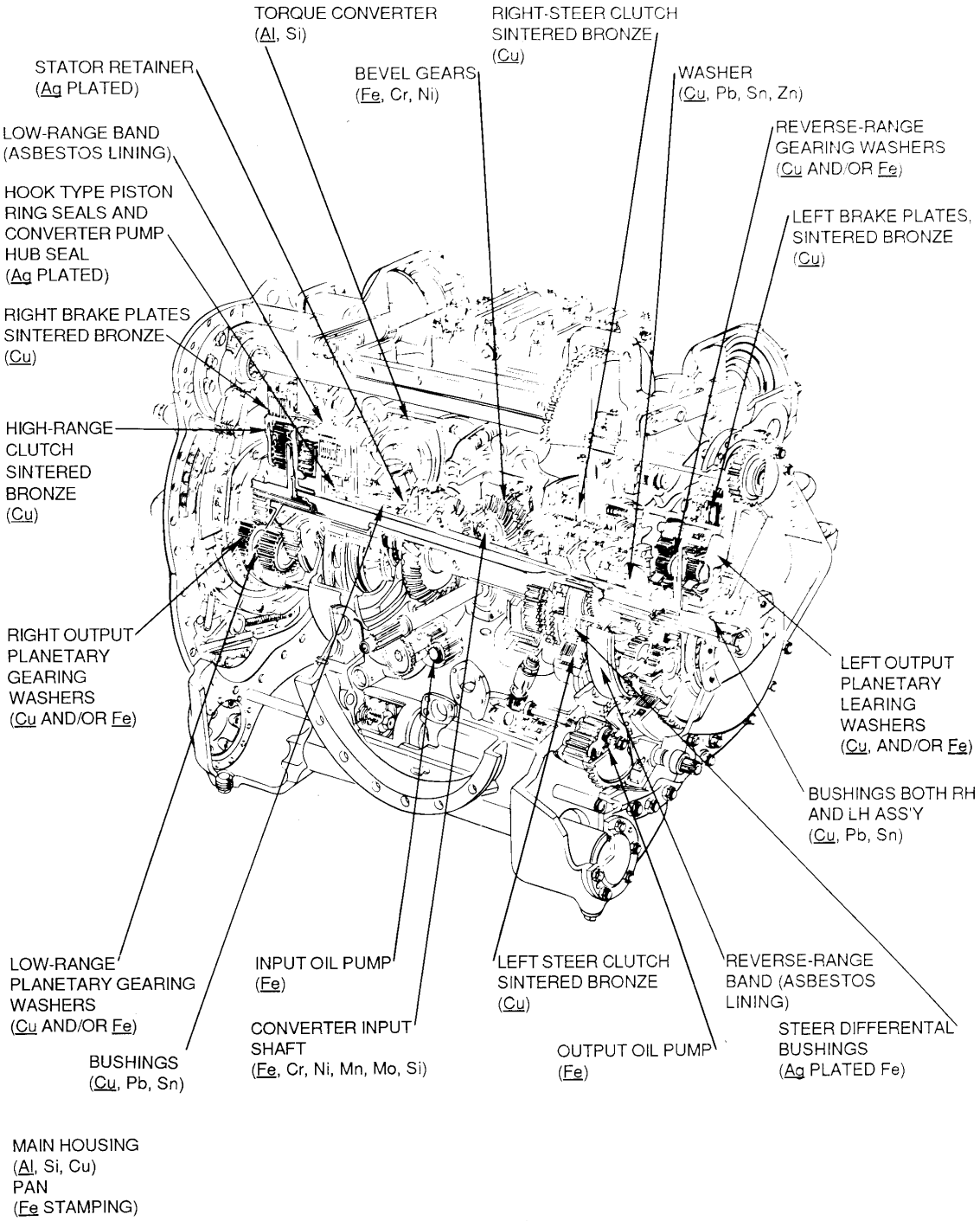

FIGURE 1. Detroit Diesel Allison CD 850-6A

This Page Intentionally Left Blank

COMPONENT: DETROIT DIESEL ALLISON CLBT 750 (TRANSMISSION)

LUBRICANT: MIL-L-2104

	Fe	Ag	Al	Cr	Cu	Si	Sn	Ni	Pb	Mo	Mg
Normal Range	0-106	0-11	0-19	0-3	0-198	0-58	0-6	0-5	0-19		
Marginal Range	107-131	12-14	20-24	4	199-244	59-72	7-8	6	20-24		
High Range	132-163	15-17	25-29	5	245-304	73-89	9-10	7-8	25-30		
Abnormal	164+	18+	30+	6+	305+	90+	11+	9+	31+		
Abnormal Trend (PPM Increase in 10 Hrs)	10	2	2	2	18	4	2	2	2		

TECHNICAL INFORMATION

Silicon additives may be used as antifoaming agents in the lubricating oil, thus new oil normally gives a reading of 3-7PPM silicon.

Aluminum particles are commonly found in the transmission pan. Aluminum and cast iron parts have significant amounts of silicon in their composition.

Transmission is liquid-cooled; therefore, ethylene glycol may be present in the oil. If significant amounts of ethylene glycol are found, it is suggested that appropriate action be taken because the clutches and seals may be affected accordingly.

APPLICABLE END ITEMS

M911

This Page Intentionally Left Blank

COMPONENT: **DETROIT DIESEL ALLISON CRT 3531-1 (TRANSMISSION)**

LUBRICANT:

	Fe	Ag	Al	Cr	Cu	Si	Sn	Ni	Pb	Mo	Mg
Normal Range	0-117		0-16	0-4		0-51	0-12		0-318		
Marginal Range	118-145		17-20	5		52-63	13-15		319-391		
High Range	146-181		21-24	6-7		64-79	16-19		392-489		
Abnormal	182+		25+	8+		80+	20+		490+		
Abnormal Trend (PPM Increase in 10 Hrs)	36		4	2		1+6	4		98		

TECHNICAL INFORMATION

AVERAGE:	Fe=47	Mg=468	Sn=4
	Ag=1	Na=29	Ti=1
	Al=7	Ni=1	B=47
	Cr=1	Pb=154	Mo=1
	Cu=147	Si=12	Zn=725

APPLICABLE END ITEMS

RLT 10-1, RTL 10

This Page Intentionally Left Blank

This Page Intentionally Left Blank

COMPONENT: DETROIT DIESEL ALLISON G 411-2A (TRANSMISSION)

LUBRICANT: MIL-L-2104

	Fe	Ag	Al	Cr	Cu	Si	Sn	Ni	Pb	Mo	Mg
Normal Range	0-212	0-24	0-20	0-15	0-208	0-55	0-17	0-13	0-124	0-4	
Marginal Range	213-261	25-30	21-24	16-18	209-256	56-68	18-21	14-16	125-152	5	
High Range	262-326	31-37	25-31	19-23	257-320	69-85	22-26	17-20	153-190	6	
Abnormal	327+	38+	32+	24+	321+	86+	27+	21+	191+	7+	
Abnormal Trend (PPM Increase in 10 Hrs)	16	3	2	2	23	4	2	2	11	2	

TECHNICAL INFORMATION

The brake and clutch plates in the transmission are sintered bronze. When the iron and copper in the transmission are increasing at approximately the same rate, the plates may need adjustment, but are probably in good condition. On the other hand, if the iron wear rate exceeds the copper wear rate, the plates are probably worn excessively, and the transmission may fail.

When aluminum or aluminum and iron are increasing excessively, wear is occurring in the transmission torque converter.

Increasing silver or silver and iron may be the result of wear of the plated hook-type seals.

APPLICABLE END ITEMS

M107, M108, M109, M109A1, M109A2, M109A3, M110, M110A2, M578, M992, XM1050

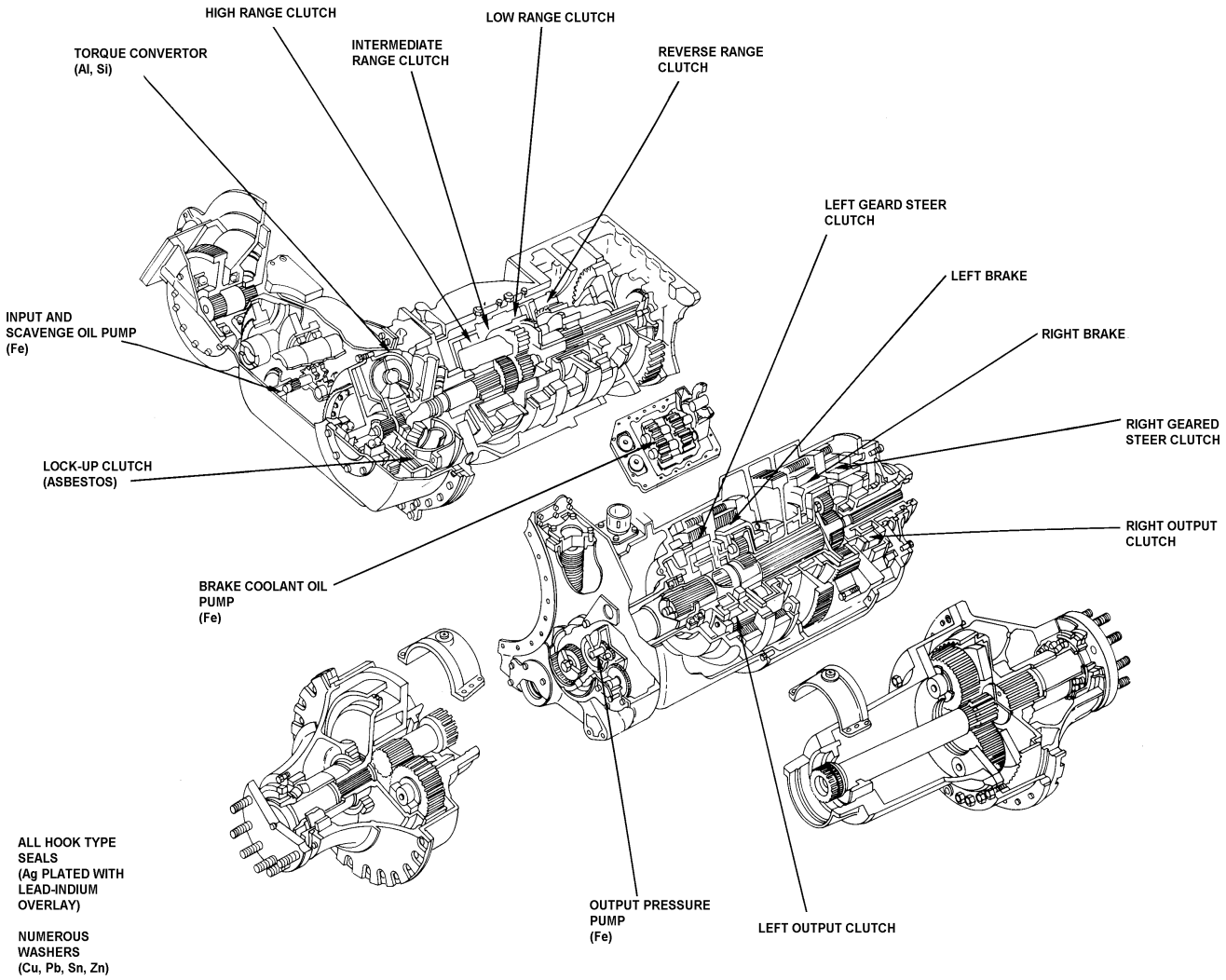

DETROIT DIESEL ALLISON XTG411-2A

COMPONENT: **DETROIT DIESEL ALLISON HT 740D (TRANSMISSION)**

LUBRICANT: **MIL-L-2104**

	Fe	Ag	Al	Cr	Cu	Si	Sn	Ni	Pb	Mo	Mg
Normal Range	0-119	0-3	0-13	0-3	0-310	0-25	0-13		0-21		
Marginal Range	120-147		14-16	4	311-381	26-31	14-17		22-26		
High Range	148-184	4	17-20	5	382-476	32-39	18-21		27-33		
Abnormal	185+	5+	21+	6+	477+	40+	22+		34+		
Abnormal Trend (PPM Increase in 10 Hrs)	37	2	4	2	95	8	4		7		

TECHNICAL INFORMATION

APPLICABLE END ITEMS

M977, M978, M983, M984, M985

This Page Intentionally Left Blank

COMPONENT: DETROIT DIESEL ALLISON HT 750CRD (TRANSMISSION)

LUBRICANT: MIL-L-2104

	Fe	Ag	Al	Cr	Cu	Si	Sn	Ni	Pb	Mo	Mg
Normal Range	0-100	0-11	0-21	0-4	0-202	0-47	0-10	0-5	0-66	0-8	
Marginal Range	101-123	12-14	22-26	5	203-249	48-58	11-13	6	67-82	9	
High Range	124-153	15-17	27-33	6	250-311	59-73	14-16	7-8	83-102	10-12	
Abnormal	154+	18+	34+	7+	312+	74+	17+	9+	103+	13+	
Abnormal Trend (PPM Increase in 10 Hrs)	9	2	2	2	24	4	2	2	3	2	

TECHNICAL INFORMATION

Silicon additives may be used as antifoaming agents in the lubricating oil, thus new oil normally gives a reading of 3 to 7 PPM silicon.

Aluminum particles are commonly found in the transmission pan. Aluminum and cast iron parts have significant amounts of silicon in their composition.

Transmission is liquid-cooled; therefore, ethylene glycol may be present in the oil. If significant amounts of ethylene glycol are found, it is suggested that appropriate action be taken because the clutches and seals may be affected accordingly.

APPLICABLE END ITEMS

F5070

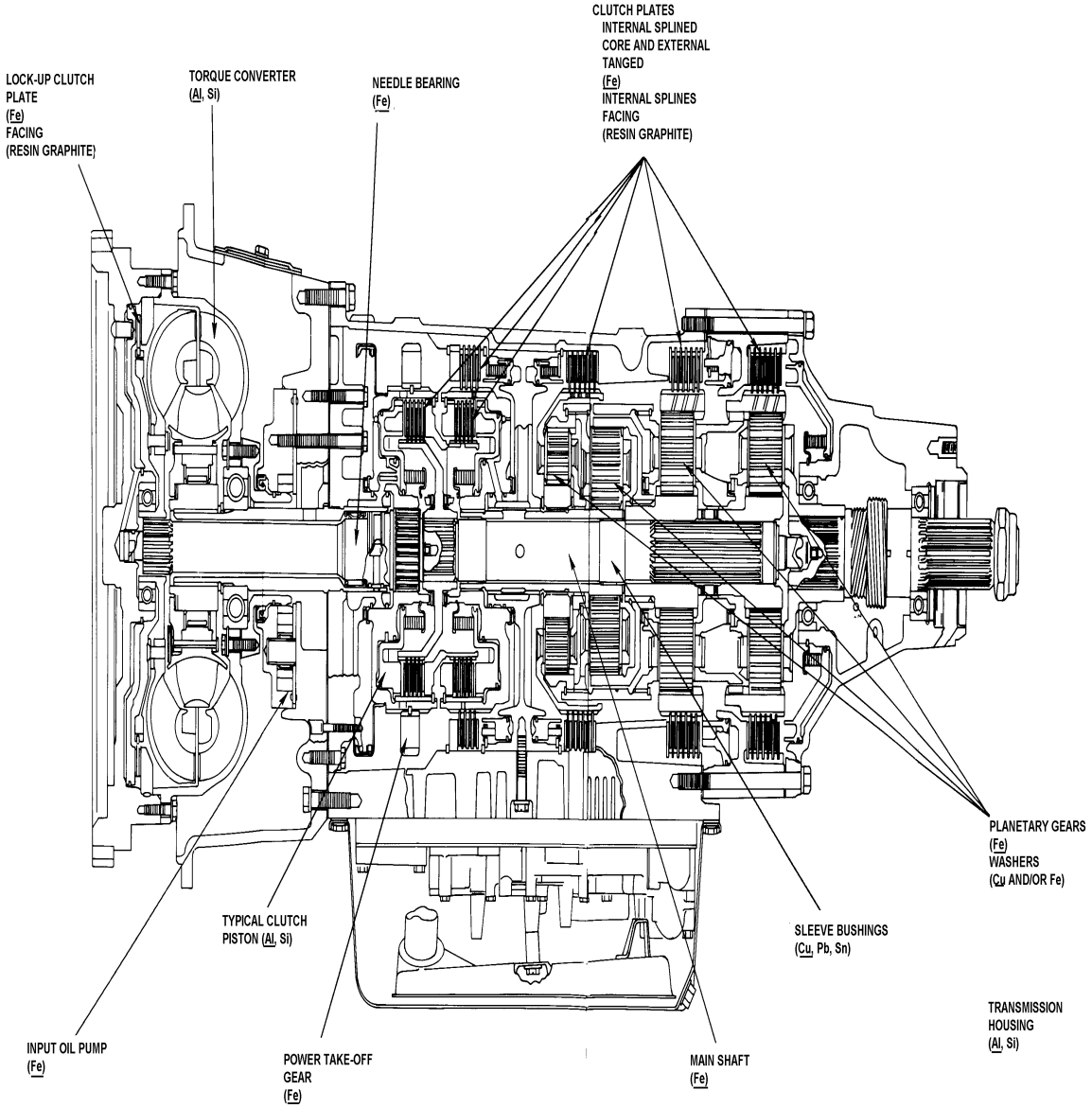

FIGURE 1. Detroit Diesel Allison HT 750CRD (Transmission)

COMPONENT: **DETROIT DIESEL ALLISON HT 754CRD (TRANSMISSION)**

LUBRICANT: **MIL-L-2104**

	Fe	Ag	Al	Cr	Cu	Si	Sn	Ni	Pb	Mo	Mg
Normal Range	0-90		0-9		0-470	0-12			0-59		
Marginal Range	91-111		10-11		471-578	13-15			60-73		
High Range	112-138		12-13		579-723	16-19			74-92		
Abnormal	139+		14+		724+	20+			93+		
Abnormal Trend (PPM Increase in 10 Hrs)											

TECHNICAL INFORMATION

APPLICABLE END ITEMS

M915A1

This Page Intentionally Left Blank

COMPONENT: **DETROIT DIESEL ALLISON MT 654CR (TRANSMISSION)**

LUBRICANT: **MIL-L-2104**

	Fe	Ag	Al	Cr	Cu	Si	Sn	Ni	Pb	Mo	Mg
Normal Range	0-146	0-6	0-15	0-4	0-500	0-21	0-6		0-23		
Marginal Range	147-180	7	16-19	5	501-625	22-26	7-8		24-28		
High Range	181-225	8-9	20-23	6-7	626-780	27-33	9-10		29-35		
Abnormal	226+	10+	24+	8+	781+	34+	11+		36+		
Abnormal Trend (PPM Increase in 10 Hrs)	45	3	4	2	160	7	3		7		

TECHNICAL INFORMATION

*The manufacturer states normal break-in is 5000mi/200hr/12mo, whichever is longest. During this time, an increase in Cu alone is not cause for concern. No action should be taken except to change oil when Cu reached 900 PPM. If Cu and another wear metal element increase simultaneously, detrimental wear may be occurring and routine evaluation techniques apply.

Silicon additives may be used as antifoaming agents in the lubricating oil, thus new oil normally gives a reading of 3 to 7 PPM silicon.

Aluminum particles are commonly found in the transmission pan. Aluminum and cast iron parts have significant amounts of silicon in their composition.

Transmission is liquid-cooled; therefore, ethylene glycol may be present in the oil. If significant amounts of ethylene glycol are found, it is suggested that appropriate action be taken because the clutches and seals may be affected accordingly.

APPLICABLE END ITEMS

M923, M924, M925, M927, M928, M929, M940, M941, M942, M943, M944, M945, M930, M931, M932, M934, M936 M939

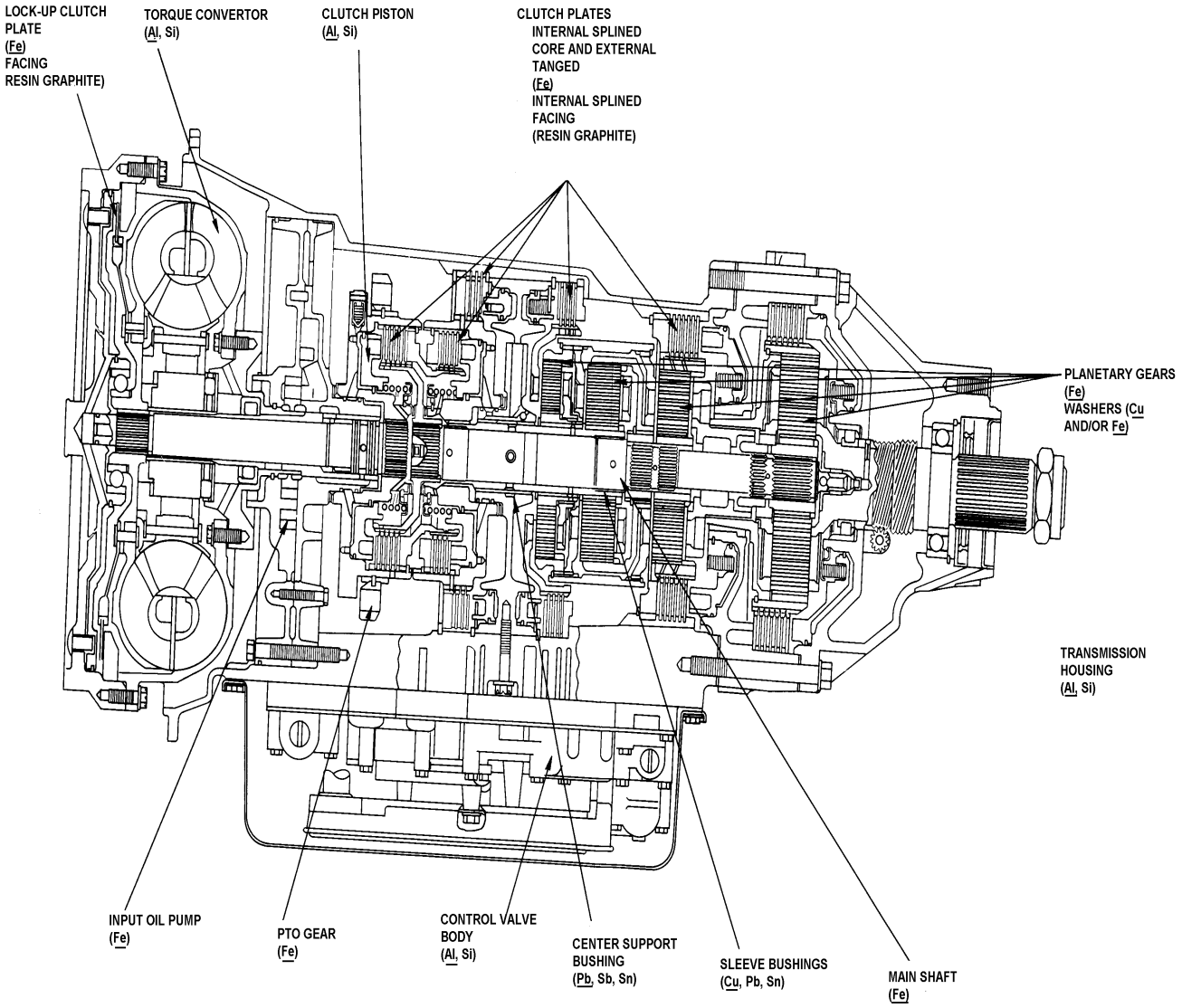

FIGURE 1. Detroit Diesel Allison MT 654CR

COMPONENT: **DETROIT DIESEL ALLISON THM-3L80 (TRANSMISSION)**

LUBRICANT: **DEXTRON II, III, IV**

TRANSMISSION WEAR METAL BASELINES

These interim wear metal guidelines are based on the manufacturer's used lubrication oil chemical analysis. The Oil Analysis Standard Interservice System (OASIS) software will be modified to reflect actual wear metal parameters.

Wear Metal/Coolant Elements	Normal Limits (PPM)	Upper Limits (PPM)
Aluminum (Al)	2 to 25	50 to 75
Boron (B)	10 to 100	200 (See Notes)
Copper (Cu)	20 to 150	300 to 400
Iron (Fe)	10 to 100	200
Lead (Pb)	5 to 50	150 or higher
Magnesium (Mg)	0	-
Molybdenum (Mo)	0	-
Silicon (Si)	2 to 25	50
Sodium (Na)	Less than 25	-
Zinc (Zn)	600 to 900	

NOTE

High readings of B, Mg, Mo, and Zn are usually indications of component's lubrication additive packages. If after establishing a base from obtaining a sample of the servicing oil, increases in the above mentioned elements are an indication of coolant/water contamination. If the component's oil sample is discolored, then recommend the transmission oil be changed.

APPLICABLE END ITEMS

M996, M996A1, M997, M997A1, M997A2, M998, M998A1, M998A2, M1025, M1025A1, M1025A2, M1026, M1026A1, M1035, M1035A2, M1036, M1037, M1038, M1038A1, M1042, M1043, M1043A2, M1044, M1046, M1069, M1097, M1097A2, M1109, M1113, M1114, M1123

This Page Intentionally Left Blank

COMPONENT: **DETROIT DIESEL ALLISON TT2421-1 (TRANSMISSION)**

LUBRICANT:

	Fe	Ag	Al	Cr	Cu	Si	Sn	Ni	Pb	Mo	Mg
Normal Range	0-73		0-16		0-99	0-41	0-50	0-110	0-108		
Marginal Range	90		17-20		100-122	42-51	51-61	111-135	109-132		
High Range	112		21-25		123-153	52-63	62-76	136-169	133-166		
Abnormal	113+		26+		154+	64+	77+	170+	167+		
Abnormal Trend (PPM Increase in 10 Hrs)	22		5		31	13	15	34	33		

TECHNICAL INFORMATION

Silver (Ag)	May be seen, but is not considered significant by the item manager.

APPLICABLE END ITEMS

MW24B, MW24C

This Page Intentionally Left Blank

COMPONENT: **DETROIT DIESEL ALLISON TX100-1 (TRANSMISSION)**

LUBRICANT: **MIL-L-2104**

	Fe	Ag	Al	Cr	Cu	Si	Sn	Ni	Pb	Mo	Mg
Normal Range	0-112	0-8	0-23	0-3	0-222	0-18	0-10	0-2	0-293	0-3	
Marginal Range	113-138	9-10	24-28		223-273	19-22	11-12		294-360		
High Range	139-173	11-12	29-35	4	274-342	23-27	13-16	3	361-451	4	
Abnormal	174+	13+	36+	5+	343+	28+	17+	4+	452+	5+	
Abnormal Trend (PPM Increase in 10 Hrs)	34	3	7	2	68	5	4	2	90	2	

TECHNICAL INFORMATION

Silicon additives may be used as antifoaming agents in the lubricating oil, thus new oil normally gives a reading of 3 to 7 PPM silicon.

Aluminum particles are commonly found in the transmission pan. Aluminum and cast iron parts have significant amounts of silicon in their composition.

Oil contamination is usually "operator-induced."

Transmission is liquid-cooled; therefore, ethylene glycol may be present in the oil. If significant amounts of ethylene glycol are found, it is suggest that appropriate action be taken because the clutches and seals may be affected accordingly.

APPLICABLE END ITEMS

M1015, M1015A1, M106A1, M106A2, M113A1, M113A2, M125A1, M125A2, M163, M163A1, M548, M548A1, M577A1, M577A2, M667, M688, M730, M730A1, M741A1, M752, M901, M901A1, M981

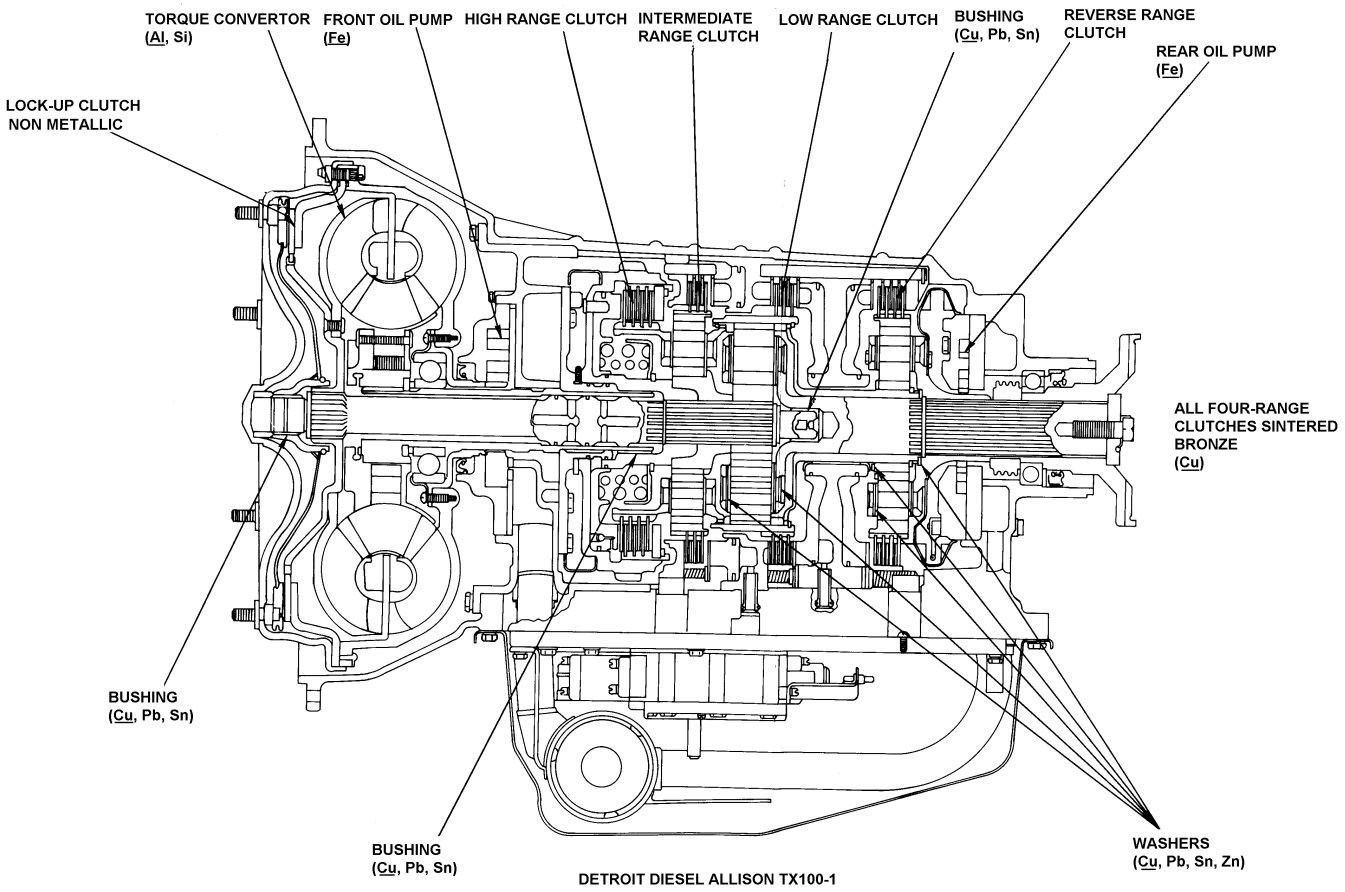

FIGURE 1. Detroit Diesel Allison TX100-1

COMPONENT: **DETROIT DIESEL ALLISON X1100-3B (TRANSMISSION)**

LUBRICANT: **MIL-L-2104**

	Fe	Ag	Al	Cr	Cu	Si	Sn	Ni	Pb	Mo	Mg
Normal Range	0-147	0-8	0-171	0-7	0-653	0-27	0-32	0-6	0-227		
Marginal Range											
High Range	471-676	9-12	172-300	8-12	654-903	28-34	33-51	7-10	228-325		
Abnormal	677+	13+	301+	13+	904+	35+	52+	11+	326+		
Abnormal Trend (PPM Increase in 10 Hrs)	63	6	50	3	78	6	10	3	65		

TECHNICAL INFORMATION

The brake and clutch plates in the transmission are sintered bronze. When the iron and copper in the transmission are increasing at approximately the same rate, the plates may need adjustment, but are probably worn excessively, and the transmission may fail. This is because the plates are worn through and the iron is coming from the backing plates.

The transmission is air-cooled; therefore, there should be no ethylene glycol contamination problems.

Probable sources of wear metals:

Fe - Steel gears
Ag - Hydrostatic cylinder cups
Al - Torque converter, oil pump, and main housing bearing
Cr and Mo - Steel alloys (usually <4 PPM)

X1100-3B transmissions should not be removed or have the oil changed for silver (AG) wear metal test findings of 13 (PPM) or greater unless other abnormal wear metal indications are present.

When levels of silver of 13PPM or greater are indicated, without increases in other wear metals, AOAP labs will advise the equipment unit to conduct the following functional test in lieu of advising maintenance or servicing. The functional test is applicable **only** for indications of abnormal silver findings with no increase in other wear metals.

TQCOM, M1A2/SEP PM office in coordination with Allison, Inc. (OEM) recommended maintenance personnel conduct the following operational checks to determine transmission operational performance. Maintenance personnel should perform a functional test of the hydrostatic steering unit (HSU) on a hard or paved surface.

1. Select pivot steer, tac idle and perform a full 360 degree left steer turn, then return to a no-steer position in less than 20 seconds.

2. Next, perform a full 360 degree right steer turn and come back to a no-steer position in less than 20 seconds.

3. If the tank pivots in both directions (left and right) in less than 20 seconds (in each direction), the HSU is performing satisfactorily. However, if the tank fails to turn in either direction or fails to cycle within the specified time, perform this procedure again ensuring that the brakes are not partially applied. If it fails to meet the specified functional test operational requirements again, notify the appropriate maintenance personnel.

4. If the tank performs properly, no further action is required.

Until the current problem is resolved, report all X1100-3B transmission serial numbers with test findings where Ag 'only' exceeds the AOAP criteria to TACOM/PM M1A2/SEP Abrams Quality Assurance through PM AOAP.

APPLICABLE END ITEMS

M1, M1E1

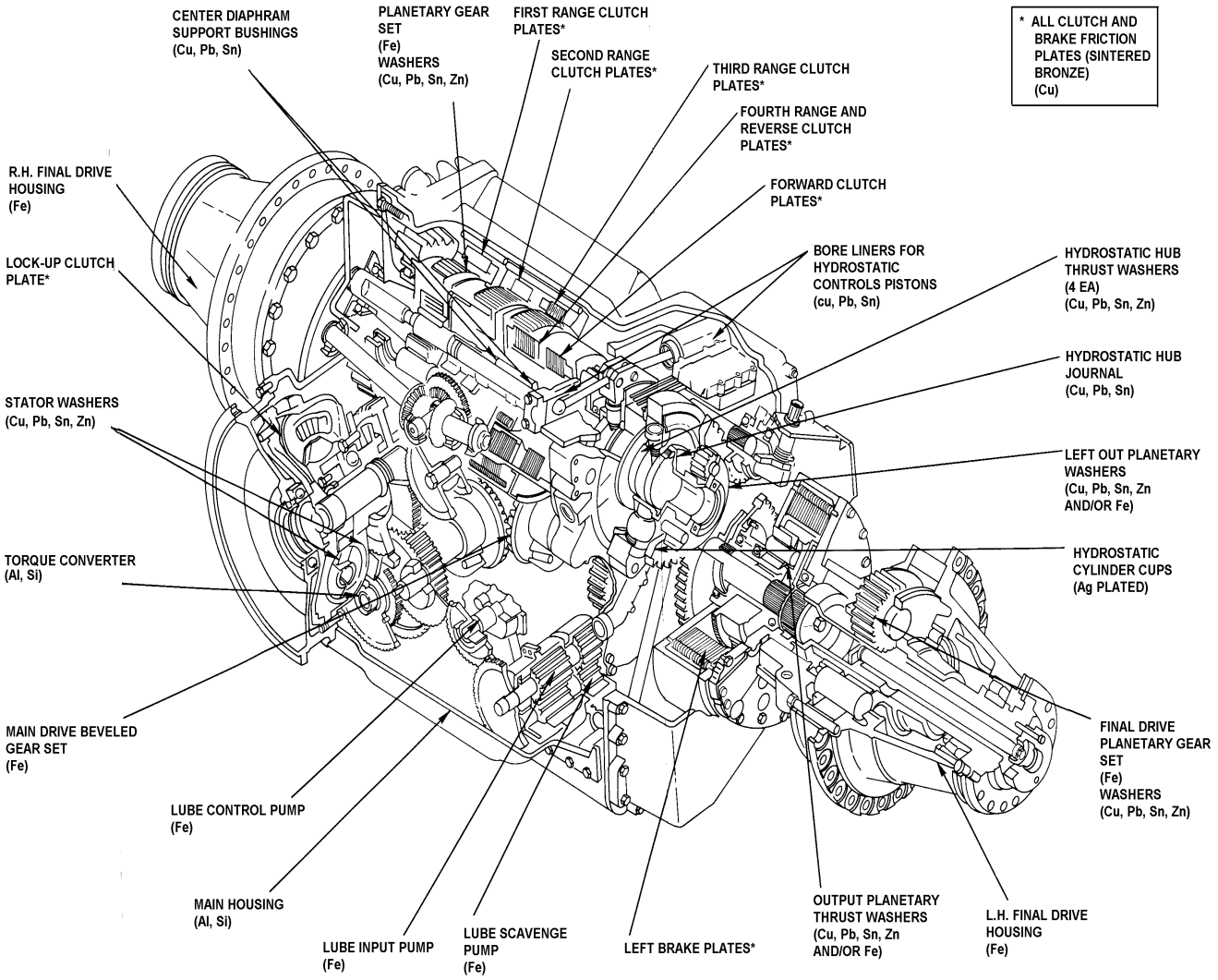

FIGURE 1. Detroit Diesel Allison X1100-3B

This Page Intentionally Left Blank

COMPONENT: **DETROIT DIESEL ALLISON XT1410-4 (TRANSMISSION)**

LUBRICANT: **CAT-TDTO-TO4**

	Fe	Ag	Al	Cr	Cu	Si	Sn	Ni	Pb	Mo	Mg
Normal Range	0-266	0-49	0-18	0-7	0-659	0-19	0-32	0-6	0-184	0-9	
Marginal Range	267-328	50-60	19-22	8-9	660-812	20-24	33-40	7	185-226	10-11	
High Range	329-410	61-75	23-28	10-11	813-900	25-29	41-50	8-9	227-283	12-14	
Abnormal	411+	76+	29+	12+	901+	30+	51+	10+	284+	15+	
Abnormal Trend (PPM Increase in 10 Hrs)	82	15	5	3	203	6	10	3	54	4	

TECHNICAL INFORMATION

Increasing copper (Cu) usually indicates wear of clutch and brake plates. Rapid initial wear is normally experienced during "break-in" of new transmissions or newly installed clutch and brake plates. The clutch plates are in transmission center section assembly. Brake plates are in both the R.H. and L.H. output reduction (final drive) assemblies. These three assemblies have a common oil system; therefore, an oil analysis alone will not indicate where excessive wear has occurred. This can only be determined by careful observation and analysis of transmission and/or vehicle performance symptoms or inspections. For this same reason, whenever a failure has generated debris, the system including coolers, oil lines, transmission center section and both R.H. and L.H. output reduction assemblies must be thoroughly flushed or disassembled for cleaning.

When aluminum (Al) or aluminum and iron (Fe) are increasing excessively, wear is occurring in the transmission torque converter.

When silver (Ag) or silver and iron are increasing excessively, wear is probably occurring in the steer flywheel drive gear bushing or the thrust washers in the low, intermediate, reverse or output carriers. This may also indicate wear of the retainer progresses, aluminum may also increase. Increasing silver or silver and iron may also be the result of wear of the plated hook-type seal rings in the converter high clutch areas.

The transmission is air-cooled; therefore, there should be no liquid-coolant contamination problems.

APPLICABLE END ITEMS

M88A1

This Page Intentionally Left Blank

COMPONENT: DETROIT DIESEL ALLISON XT1410-5A TRANSMISSION)

LUBRICANT: CAT-TDTO-TO4

	Fe	Ag	Al	Cr	Cu	Si	Sn	Ni
Normal Range	0-266	0-49	0-18	0-7	0-659	0-19	0-32	0-6
Marginal Range	267-328	50-60	19-22	8-9	660-812	20-24	33-40	7
High Range	329-410	61-75	23-28	10-11	813-1014	25-29	41-50	8-9
Abnormal	411+	76+	29+	12+	1015+	30+	51+	10+
Abnormal Trend (PPM Increase in 10 Hrs)	82	15	5	3	203	6	10	3

NOTE:
* Value is low or unchanged from previous value listed for the same element.

	Pb	Mo	Mg	Ti	Na	Zn	B
Normal Range	0-184	0-9	0-226	0	0-27	0-746	0-2
Marginal Range	185-226	10-11	227-279	*	28-33	747-918	3
High Range	227-283	12-14	280-348	1	34-42	919-1147	4
Abnormal	284+	15+	349+	2+	43+	1148+	5+
Abnormal Trend (PPM Increase in 10 Hrs)	56	4	69	1	8	229	2

TECHNICAL INFORMATION

The XT1410-5A transmission does not use engine oil MIL-L-2104; it uses Caterpillar Transmission/Drive Train oil meeting Caterpillar specification TO-4 (Cat TDTO, TO-4). This oil is specially formulated for transmissions and provides improved control of friction with the clutch, steering and brake plates. The most apparent benefit of using the Cat TDTO, TO-4 oil is the improved steering response.

Increasing copper (Cu) usually indicates wear of clutch, steering and brake plates. Rapid increases in Cu are normally experienced during initial break-in of new clutch, steering and brake plates in new or rebuilt transmissions and output reduction (final drive) assemblies.

The transmission center section assembly and the two output reduction (final drive) assemblies share a common oil system with continuous oil exchange. Therefore, an oil analysis alone cannot indicate which of the three assemblies is encountering excessive wear. This can only be determined by careful observation and analysis of transmission and/or vehicle performance symptoms or inspections. For this reason, whenever a failure has generated debris, the system, including oil coolers, oil lines, transmission center section and both right and left hand output reduction (final drive) assemblies must be thoroughly flushed or disassembled for cleaning.

When aluminum (Al) or aluminum and iron (Fe) are increasing excessively, wear is occurring in the transmission torque converter.

When silver (Ag) or silver and iron (Fe) are increasing excessively, wear is probably occurring in the steer flywheel drive gear bushing (in units prior to S/N BMY0282) or the thrust washers in the low, intermediate, reverse or output carriers. This may also indicate wear of the converter stator retainer washer. As wear of the retainer progresses, aluminum may also increase. Increasing silver or silver and iron may also be the result of wear of the silver-plated hook-type seal rings in the converter high clutch area.

The transmission oil is air-cooled. There should be no liquid coolant contamination problems.

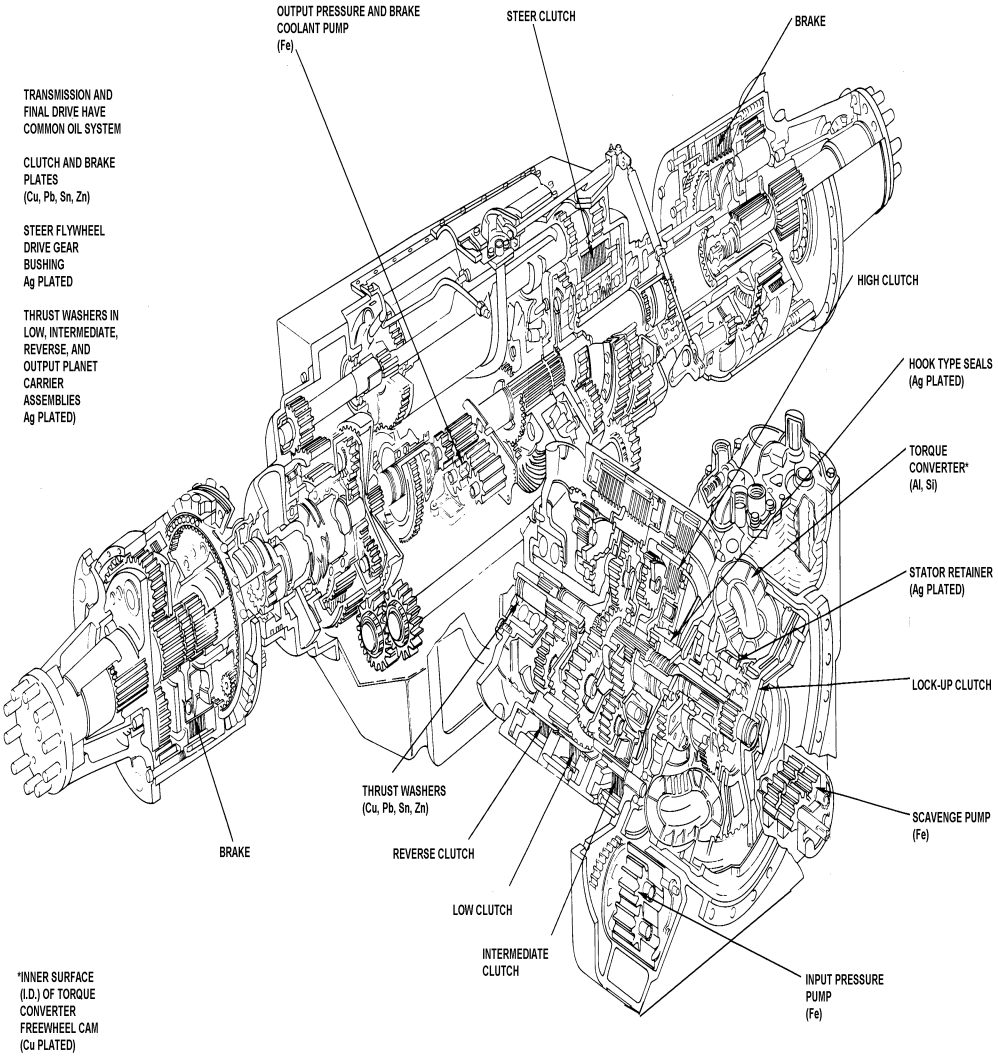

COMPONENT: **DETROIT DIESEL ALLISON G 250-1A (TRANSMISSION)**

LUBRICANT: **MIL-L-2104**

	Fe	Ag	Al	Cr	Cu	Si	Sn	Ni	Pb	Mo	Mg
Normal Range	0-122	0-20	0-27	0-11	0-194	0-52	0-23		0-103	0-9	
Marginal Range	123-151	21-25	28-33	12-13	195-238	53-64	24-28		104-127	10-11	
High Range	152-188	26-31	34-41	14-16	239-298	65-81	29-35		128-158	12-14	
Abnormal	189+	32+	42+	17+	299+	82+	36+		159+	15+	
Abnormal Trend (PPM Increase in 10 Hrs)	13	3	3	2	23	4	3		9	2	

TECHNICAL INFORMATION

APPLICABLE END ITEMS

M551, M551A1

This Page Intentionally Left Blank

COMPONENT: **GENERAL ELECTRIC HMPT-500 (TRANSMISSION)**

LUBRICANT: **MIL-L-2104**

	Fe	Ag	Al	Cr	Cu	Si	Sn	Ni	Pb	Mo	Mg
Normal Range	0-186	0-8	0-45	0-5	0-276	0-124			0-52		
Marginal Range	187-229	9-10	46-55	6	277-339	125-153			53-64		
High Range	230-286	11-12	56-69	7	340-424	154-191			65-80		
Abnormal	287+	13+	70+	8+	425+	192+			81+		
Abnormal Trend (PPM Increase in 10 Hrs)	20	2	3	2	28	13			4		

TECHNICAL INFORMATION

This is 500-hp hydromechanical power transmission (HMPT) with fully automatic shifting, three forward and one reverse speed ranges.

It is liquid-cooled, but the transmission pressure is normally higher than the liquid-coolant pressure, therefore transmission oil would normally contaminate the coolant in the event of a common leak between the two.

Transmission has a tow pump to provide push- or pull-start capability for the vehicle engine.

Power take-off (PTO) could present wear and oil contamination problems.

APPLICABLE END ITEMS

M2, M3, M993

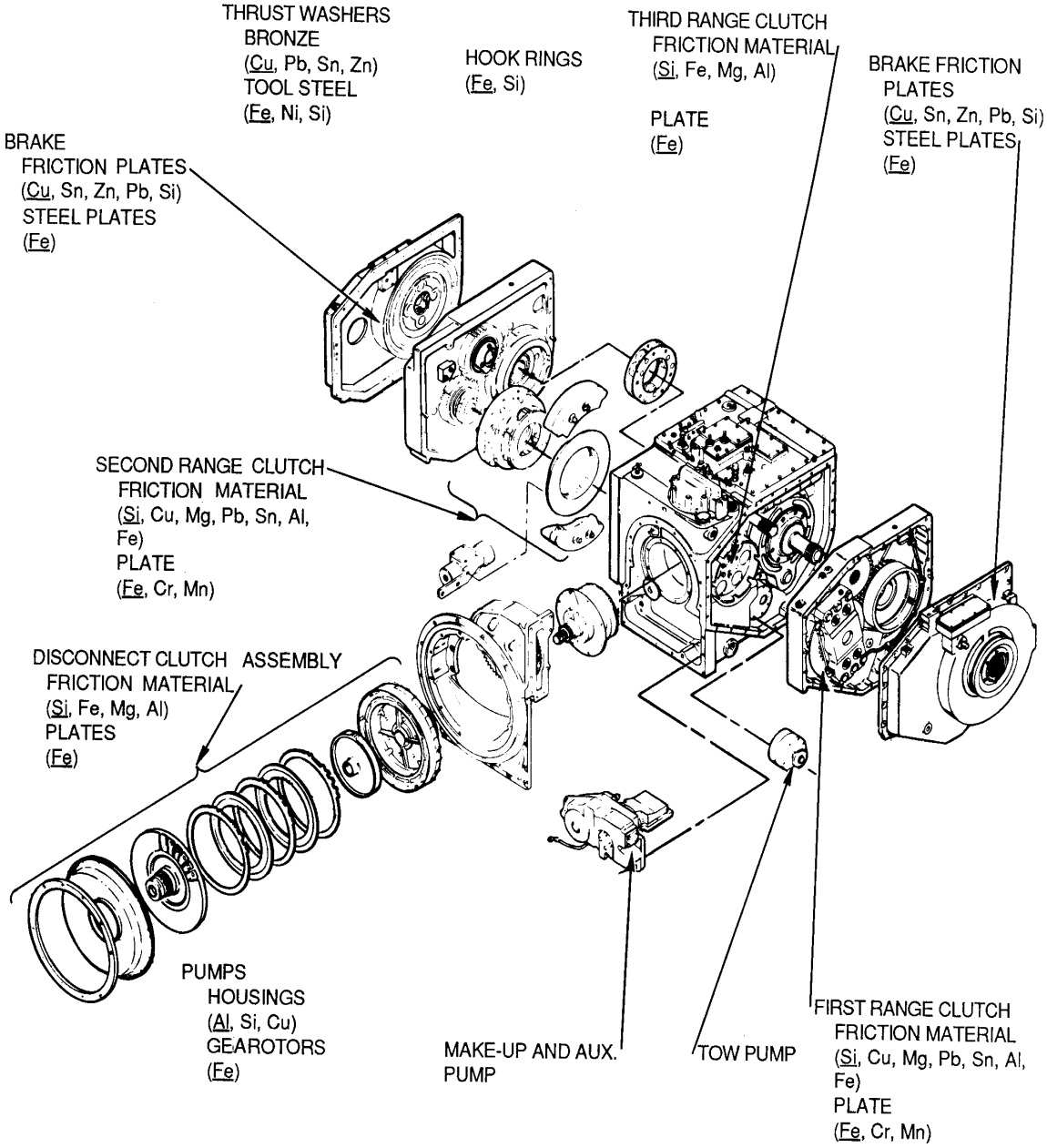

FIGURE 1. General Electric HMPT-500

COMPONENT: **INTERNATIONAL HARVESTER S-700 (TRANSMISSION)**

LUBRICANT:

	Fe	Ag	Al	Cr	Cu	Si	Sn	Ni	Pb	Mo	Mg
Normal Range	0-60	0-4	0-14	0-5		0-89	0-5		0-47		
Marginal Range	61-74	5	15-17	6		90-109	6		48-58		
High Range	75-93	6	18-21	7		110-136	7-8		59-73		
Abnormal	94+	7+	22+	8+		137+	9+		74+		
Abnormal Trend (PPM Increase in 10 Hrs)	19	2	4	2		27	2		15		

TECHNICAL INFORMATION

AVERAGE:	Fe=26	Mg=541	Sn=1
	Ag=1	Na=22	Ti=1
	Al=2	Ni=1	B=80
	Cr=1	Pb=9	Mo=1
	Cu=430	Si=31	Zn=848

APPLICABLE END ITEMS

M10A

This Page Intentionally Left Blank

COMPONENT: **MAN ZF4S-15GP (TRANSMISSION)**

LUBRICANT: **MIL-L-2104**

	Fe	Ag	Al	Cr	Cu	Si	Sn	Ni	Pb	Mo	Mg
Normal Range	0-54	0-1	0-7	0-6	0-22	0-26	0-5		0-79		
Marginal Range	55-66		8-9	7	23-27	27-32	6		80-97		
High Range	67-83		10-11	8	28-34	33-40	7-8		98-122		
Abnormal	84+	2+	12+	9+	35+	41+	9+		123+		
Abnormal Trend (PPM Increase in 10 Hrs)	17	2	3	2	7	8	2		24		

TECHNICAL INFORMATION

APPLICABLE END ITEMS

M1001, M1002, M1013, M1014

This Page Intentionally Left Blank

COMPONENT: **MERCEDES BENZ WF4A018 (TRANSMISSION)**

LUBRICANT: **MIL-L-2104**

	Fe	Ag	Al	Cr	Cu	Si	Sn	Ni	Pb	Mo	Mg
Normal Range	0-105		0-19		0-346	0-59	0-10		0-17		
Marginal Range	106-130		20-23		347-426	60-72	11-12		18-21		
High Range	131-162		24-29		427-532	73-90	13-15		22-26		
Abnormal	163+		30+		533+	91+	16+		27+		
Abnormal Trend (PPM Increase in 10 Hrs)	32		6		106+	18	4		5		

TECHNICAL INFORMATION

AVERAGE:	Fe=53	Mg=248	Sn=5
	Ag=1	Na=20	Ti=1
	Al=9	Ni=1	B=55
	Cr=1	Pb=8	Mo=1
	Cu=211	Si=19	Zn=998

APPLICABLE END ITEMS

M973

This Page Intentionally Left Blank

COMPONENT: **REINTJES VWS2232 (MARINE GEARBOX)**

LUBRICANT:

	Fe	Ag	Al	Cr	Cu	Si	Sn	Ni	Pb	Mo	Mg
Normal Range	0-200				0-25				0-150		
Marginal Range	201-300				251-400				151-250		
High Range	301-500				401-700				251-400		
Abnormal	500+				700+				400+		
Abnormal Trend (PPM Increase in 10 Hrs)											

TECHNICAL INFORMATION

This Page Intentionally Left Blank

COMPONENT: **TWIN DISC 8FLW1307 (TRANSMISSION)**

LUBRICANT:

	Fe	Ag	Al	Cr	Cu	Si	Sn	Ni	Pb	Mo	Mg
Normal Range	0-96	0-44	0-10	0-5	0-404	0-77	0-7		0-124		
Marginal Range	97-118	45-54	11-12	6	405-497	78-94	8-9		125-153		
High Range	119-147	55-68	13-15	7	498-622	95-118	10-11		154-191		
Abnormal	148+	69+	16+	8+	623+	119+	12+		192+		
Abnormal Trend (PPM Increase in 10 Hrs)	29	14	4	2	124	24	3		38		

TECHNICAL INFORMATION

AVERAGE:	Fe=35	Mg=405	Sn=2
	Ag=11	Na=17	Ti=1
	Al=2	Ni=1	B=41
	Cr=1	Pb=48	Mo=1
	Cu=188	Si=20	Zn=670

APPLICABLE END ITEMS

H446A

This Page Intentionally Left Blank

COMPONENT: **3S7094 (TRANSMISSION)**

LUBRICANT:

	Fe	Ag	Al	Cr	Cu	Si	Sn	Ni	Pb	Mo	Mg
Normal Range	0-318		0-15		0-439	0-89	0-9		0-349		
Marginal Range	319-391		16-18		440-541	90-110	10-11		350-429		
High Range	392-489		19-26		542-676	111-137	12-14		430-536		
Abnormal	490+		24+		677+	138+	15+		537+		
Abnormal Trend (PPM Increase in 10 Hrs)	98		4		135	27	3		107		

TECHNICAL INFORMATION

AVERAGE:	Fe=120	Mg=325	Sn=2
	Ag=1	Na=18	Ti=1
	Al=4	Ni=1	B=21
	Cr=1	Pb=93	Mo=1
	Cu=150	Si=34	Zn=718

APPLICABLE END ITEMS

CAT D5, CAT D5A, CAT D5B

This Page Intentionally Left Blank

COMPONENT: **5R6192 (TRANSMISSION)**

LUBRICANT:

	Fe	Ag	Al	Cr	Cu	Si	Sn	Ni	Pb	Mo	Mg
Normal Range	0-154		0-15		0-202	0-69			0-14		
Marginal Range	155-189		16-19		203-248	70-86			15-17		
High Range	190-236		20-24		249-310	87-107			18-21		
Abnormal	237+		25+		311+	108+			22+		
Abnormal Trend (PPM Increase in 10 Hrs)	47		4		62	21			4		

TECHNICAL INFORMATION

AVERAGE:	Fe=77	Mg=322	Sn=1
	Ag=1	Na=24	Ti=1
	Al=6	Ni=1	B=70
	Cr=1	Pb=5	Mo=1
	Cu=94	Si=11	Zn=755

APPLICABLE END ITEMS

130G, 130GS, 130GNS, 130GNSE, 130GNSCE

This Page Intentionally Left Blank

COMPONENT: **7G4851 (TRANSMISSION)**

LUBRICANT:

	Fe	Ag	Al	Cr	Cu	Si	Sn	Ni	Pb	Mo	Mg
Normal Range	0-160		0-14	0-4	0-167	0-38	0-6		0-21		
Marginal Range	161-197		15-17	5	168-205	39-47	7		22-25		
High Range	198-247		18-22	6	206-256	48-59	8-9		26-32		
Abnormal	248+		23+	7+	257+	60+	10+		33+		
Abnormal Trend (PPM Increase in 10 Hrs)	49		4	2	51	12	3		6		

TECHNICAL INFORMATION

AVERAGE:	Fe=86	Mg=382	Sn=1
	Ag=1	Na=17	Ti=1
	Al=4	Ni=1	B=29
	Cr=1	Pb=7	Mo=1
	Cu=61	Si=22	Zn=795

APPLICABLE END ITEMS

950BS, 950BNS

This Page Intentionally Left Blank

COMPONENT: **8S3543 (TRANSMISSION)**

LUBRICANT:

	Fe	Ag	Al	Cr	Cu	Si	Sn	Ni	Pb	Mo	Mg
Normal Range	0-54		0-15		0-65	0-23	0-4		0-33		
Marginal Range	55-66		16-18		66-80	24-28	5		34-40		
High Range	67-83		19-23		81-101	29-35	6-7		41-50		
Abnormal	84+		24+		102+	36+	8+		51+		
Abnormal Trend (PPM Increase in 10 Hrs)	17		4		20	7	2		10		

TECHNICAL INFORMATION

APPLICABLE END ITEMS

613SS, 613SNS, 613WDNS

This Page Intentionally Left Blank

COMPONENT: **C-51-2012 (TRANSMISSION)**

LUBRICANT:

	Fe	Ag	Al	Cr	Cu	Si	Sn	Ni	Pb	Mo	Mg
Normal Range	0-105	0-18	0-13	0-18		0-41	0-12		0-330		
Marginal Range	106-130	19-22	14-17	19-22		42-50	13-15		331-406		
High Range	131-162	23-28	18-21	23-27		51-63	16-19		407-508		
Abnormal	163+	29+	22+	28+		64+	20+		509+		
Abnormal Trend (PPM Increase in 10 Hrs)	32	6	4	5		13	4		102		

TECHNICAL INFORMATION

AVERAGE:	Fe=44	Mg=573	Sn=3
	Ag=4	Na=20	Ti=1
	Al=3	Ni=1	B=24
	Cr=1	Pb=118	Mo=1
	Cu=154	Si=18	Zn=724

APPLICABLE END ITEMS

M746

This Page Intentionally Left Blank

COMPONENT: **HS 400-3 (TRANSMISSION)**

LUBRICANT: **MIL-L-2104**

	Fe	Ag	Al	Cr	Cu	Si	Sn	Ni	Pb	Mo	Mg
Normal Range	0-100	0-5	0-15	0-5	0-200	0-30			0-200		
Marginal Range	101-150	6-7	16-20	6-7	201-250	31-40			201-250		
High Range	151-200		21-30		251-300	41-50			251-300		
Abnormal	201+	8+	31+	8+	301+	51+			301+		
Abnormal Trend (PPM Increase in 10 Hrs)											

TECHNICAL INFORMATION

APPLICABLE END ITEMS

LT, LVTC-7, LVTC-7A1, LVTP-7, LVTP-7A1, LVTR-7, LVTR-7A1

This Page Intentionally Left Blank

COMPONENT: **M1070 TRANSMISSION**

LUBRICANT:

	Fe	Ag	Al	Cu	Na	Pb	Si	Sn
Normal Range	0-60	0-3	0-22	0-311	0-11	0-172	0-10	0-9
Marginal Range	61-85	4-5	23-28	312-383	12-13	173-212	11-18	10-15
High Range	85-100	6-7	29-35	384-478	14-16	213-265	19-26	16-20
Abnormal	101+	8+	36+	479+	17+	266+	27+	21+
Trend	18	3	7	96	4	53	5	4

TECHNICAL INFORMATION

This Page Intentionally Left Blank

COMPONENT: **M1074 TRANSMISSION**

LUBRICANT:

	Fe	Ag	Al	Cu	Na	Pb	Si	Sn
Normal Range	0-60	0-3	0-15	0-311	0-10	0-172	0-10	0-9
Marginal Range	61-85	4-5	16-18	312-382	11-13	173-212	11-18	10-15
High Range	85-100	6-7	19-23	383-478	14-16	213-265	19-26	16-20
Abnormal	101+	8+	24+	479+	17+	266+	27+	21+
Trend	18	3	4	96	4	53	5	4

TECHNICAL INFORMATION

This Page Intentionally Left Blank

COMPONENT: **M1075 TRANSMISSION**

LUBRICANT:

	Fe	Ag	Al	Cu	Na	Pb	Si	Sn
Normal Range	0-60	0-3	0-16	0-337	0-11	0-172	0-10	0-9
Marginal Range	61-85	4-5	17-20	338-415	12-13	173-212	11-18	10-15
High Range	85-100	6-7	21-25	416-519	14-16	213-265	19-26	16-20
Abnormal	101+	8+	26+	520+	18+	266+	27+	21+
Trend	18	3	4	104	4	53	5	4

TECHNICAL INFORMATION

NOTES

The prevalent metal/elemental components in these transmissions are comprised of Aluminum (Al), Iron (Fe), Copper (Cu), Tin (Sn) and Lead (Pb). Typical contamination elements are Silicon (Si) from dirt and additive, and Sodium (Na) representing salt from the dirt. MIL-PRF-2104 products are used in the transmissions.

The Titanium (Ti), Chromium (Cr), and Nickel (Ni), are not considered adequate for use as wear metals since there are no components with those elements in any concentration that should be monitored. Therefore, it is recommended that these elements should not be monitored under AOAP for the M1070, M1074, and M1075 transmissions.

Zinc (Zn), Molybdenum (Mo), Boron (B), and Magnesium (Mg) are typical additives found in products under MIL-PRF-2104. Mg can also be found in some metallic alloys. However, when the Mg is an additive it can be found in concentrations as high as 600 PPM. Therefore, Mg is not a good indicator of wear since there is no way to determine how much is from the additives and how much is from wear. Unlike Zn, not all lubricant products contain B, Mg, or Mo. B and Mo, like Mg, are not recommended for use as elements to be used for condition since they are not wear elements nor a typical value can be determined for oil condition. The element Zn is an exclusive result of additives. The range of values for Zn in oil is 1000-1300 PPM. This range is a normal range for Zn. Values lower than 900 PPM should be considered suspicious since it would be a result of a non-MIL-PRF-2104 product.

This Page Intentionally Left Blank

COMPONENT: THM-400/THM-4L80E TRANSMISSION WEAR METAL BASELINES

LUBRICANT:

These interim wear metal guidelines are based on the manufacturer's used lubrication oil chemical analysis. The Oil Analysis Standard Interservice System (OASIS) software will be modified to reflect actual wear metal parameters.

WEAR METAL/COOLANT ELEMENTS

	Al	B	Cu	Fe	Pb	Mg	Mo	Si	Na	Zn
Normal	2-25	10-100	20-150	10-100	5-50	0	0	2-25	<25	600-900
Upper Limits	50-75	200*	300-400	200	150+			50		

* See Note.

NOTE

High readings of B, Mg, Mo, and Zn are usually indications of component's lubrication additive packages. If after establishing a base from obtaining a sample of the servicing oil, increases in the above mentioned elements are an indication of coolant/water contamination. If the component's oil sample is discolored, then recommend the transmission oil be changed.

APPLICABLE END ITEMS

M1034A2, M1035A2, M1097A2, M11133, M1114, M1123, M998A2

This Page Intentionally Left Blank

COMPONENT: **TX200-6 (TRANSMISSION)**

LUBRICANT:

	Fe	Ag	Al	Cr	Cu	Si	Sn	Ni	Pb	Mo	Mg
Normal Range	0-208	0-23	0-9	0-4		0-41			0-73		
Marginal Range	209-225	24-29	10-11	5		42-50			74-90		
High Range	256-319	30-36	12-14	6		51-63			91-112		
Abnormal	320+	37+	15+	7+		64+			113+		
Abnormal Trend (PPM Increase in 10 Hrs)	64	7	3	2		13			22		

TECHNICAL INFORMATION

AVERAGE:	Fe=93	Mg=459	Sn=2
	Ag=7	Na=24	Ti=1
	Al=5	Ni=1	B=69
	Cr=2	Pb=30	Mo=1
	Cu=227	Si=15	Zn=599

APPLICABLE END ITEMS

M757, M656, M791

This Page Intentionally Left Blank

COMPONENT: **ZED F MODEL WG-120 (TRANSMISSION)**

LUBRICANT:

	Fe	Ag	Al	Cr	Cu	Si	Sn	Ni	Pb	Mo	Mg
Normal Range	0-60				0-25						
Marginal Range	61-75				26-50						
High Range	76-150				51-150	40					
Abnormal	151+				151+						
Abnormal Trend (PPM Increase in 10 Hrs)											

TECHNICAL INFORMATION

APPLICABLE END ITEMS

LOCO 100 T

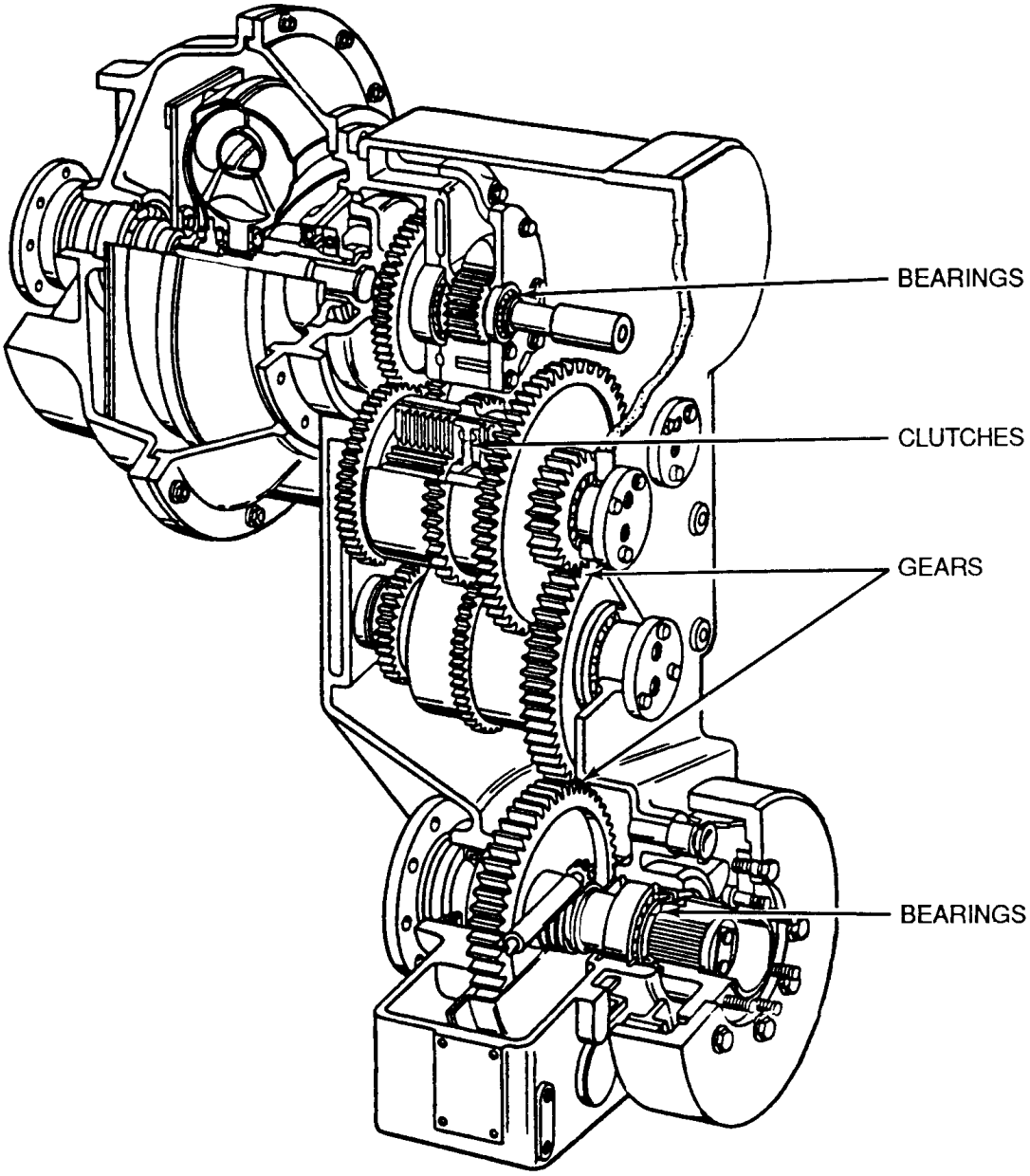

FIGURE 1. ZED F Model WG-120 Transmission - Sectional View

COMPONENT: **M1000 HYDRAULIC SYSTEM**

LUBRICANT:

	Fe	Al	Cu	Mg	Na	Si
Trend	4	7	0-11	0-32	0-15	0-11
Normal	0-13	0-14	12-13	33-39	16-18	12-14
Marginal	14-18	15-20	14-17	40-49	19-23	15-17
High	19-29	20-25	18+	50+	24+	18+
Abnormal	30+	26+	4	10	4	4

TECHNICAL INFORMATION

NOTE

This system requires the use of a hydraulic fluid instead of a product under MIL-PRF-2104.

This Page Intentionally Left Blank

COMPONENT: **M1070 HYDRAULIC SYSTEM**

LUBRICANT:

	Fe	Al	Cu	Pb	Na	Si
Trend	4	7	9	2	4	6
Normal	0-13	0-14	0-30	0-4	0-14	0-18
Marginal	14-18	15-20	31-37	5	15-17	19-22
High	19-29	20-25	38-47	6	18-21	23-28
Abnormal	30+	26+	48+	7+	22+	29+

TECHNICAL INFORMATION

This Page Intentionally Left Blank

COMPONENT: **M1074 HYDRAULIC SYSTEM**

LUBRICANT:

	Fe	Al	Cu	Pb	Na	Si
Trend	4	7	38	42	4	6
Normal	0-13	0-14	0-123	0-135	0-16	0-18
Marginal	14-18	15-20	124-152	136-166	17-19	19-22
High	19-29	20-25	153-190	167-208	20-24	23-28
Abnormal	30+	26+	191+	209+	25+	29+

TECHNICAL INFORMATION

This Page Intentionally Left Blank

COMPONENT: M1075 HYDRAULIC SYSTEM

LUBRICANT:

	Fe	Al	Cu	Pb	Na	Si
Trend	4	7	32	27	4	6
Normal	0-13	0-14	0-104	0-89	0-15	0-18
Marginal	14-18	15-20	105-128	90-110	16-18	19-22
High	19-29	20-25	129-160	111-137	19-23	23-28
Abnormal	30+	26+	161+	138+	24+	29+

TECHNICAL INFORMATION

NOTES

General information on the metallurgy of the hydraulic system indicates the metals found in hydraulic systems are Iron (Fe), Aluminum (Al), Magnesium (Mg), and Copper (Cu).

MIL-PRF-2104 fluid is used for all listed components except for the M1000, which requires a hydraulic fluid.

Additives found in products under MIL-PRF-2104 can contain the following elements: Zn, Mg, Mo, Si, Ca, and B (Ca is not currently included in the AOAP and is only mentioned as reference). The concentrations can vary depending on the technology used. Only the element Zn is found all the time at concentrations between 1000-1300 PPM. Si is found between 5-20 PPM. The other elements can range from 0-600 PPM.

The following elements are not recommended to be monitored/used to determine condition of the system: Ag, Cr, Ni, Sn, Ti, Pb, B, Mo, and Zn are either not part of the metallurgy of the system (at least in any significance) or the oil contributions would overshadow any wear limits making monitoring worthless. The problem with elements that are in the oil is that they can change in concentration from 0 to the maximum range indicated above and therefore significantly affect AOAP limits.

This Page Intentionally Left Blank

COMPONENT: **M88A2 HERCULES MAIN HYDRAULIC SYSTEM**

LUBRICANT: **MIL-H-46170**

	Fe	Ag	Al	Cr	Cu	Si	Sn	Ni
Normal Range	0-3	0	0-1	0-1	0-1	0-16	0-5	0-1
Marginal Range	4-5	*	2	2	2	17-20	6	*
High Range	6	1	3	3	3	21-25	7-8	2
Abnormal	7+	2+	4+	4+	4+	26+	9+	3+
Abnormal Trend (PPM Increase in 10 Hrs)	2	*	2	2	2	5	2	1

	Pb	Mo	Mg	Ti	Na	Zn	B
Normal Range	0-1	0-2	0-7	0-1	0-10	0-52	0-2
Marginal Range	2	*	8-15	*	11-12	53-64	3
High Range	3-4	3	16-25	2	13-15	65-80	4
Abnormal	5+	4+	26+	3+	16+	81+	5+
Abnormal Trend (PPM Increase in 10 Hrs)	2	2	4	2	4	16	2

TECHNICAL INFORMATION

Increasing silicon (Si) usually indicates contamination of the servicing component oil system. A drain and flush of the hydraulic system, including replacement of both the return circuit filter and the charge circuit filter, will reduce abnormal silicon analysis readings.

The presence of iron (Fe) or iron and water (H_2O) is probably rust occurring as a result of condensation or internal oil pump and/or component wear; such as cooler, quick disconnect valves, cross overlines, etc., since this is a closed operating system. Components would include the cooler, quick disconnect valves, cross-over lines, etc. Analysis readings of 1,000 parts per million (PPM) or more of water in a hydraulic oil sample usually warrant a recommendation to change oil and service or replace the filter. The FT-IR test for the presence of water in EP additive fluids is observed as a baseline rise or offset, but does not show the evidence of Tyndal-particulate or colloidal scattering.

This Page Intentionally Left Blank

COMPONENT: **M911 HYDRAULIC SYSTEM**

LUBRICANT:

	Fe	Al	Pb	Na	Si	Cu
Trend	4	7	0-20	6	6	13
Normal	0-13	0-14	21-25	0-29	0-18	0-44
Marginal	14-18	15-20	26-31	30-36	19-22	45-54
High	19-29	20-25	32+	37-45	23-28	55-67
Abnormal	30+	26+	6	46+	29+	68+

TECHNICAL INFORMATION

This Page Intentionally Left Blank

NAVY (SHIPS) PHYSICAL PROPERTY TEST LIMITS BY TYPE OIL AND USE

This work package is composed of a series of tables for each type of oil used by ship equipment. The test limits for the oils are based upon the type of oil in use as well as the specific type of equipment in which it is being used.

Table of Contents

Table	Title	Page
1.	MIL-PRF-2104 (15W-40) Diesel Lube Oil, Surface ship and Submarine	2
2.	MIL-PRF-5606 Hydraulic Fluid	2
3.	MIL-PRF-9000 Diesel Lube Oil (MS-9250), Surface Ship and Submarine	3
4.	MIL-DTL-17111 Hydraulic Fluid	3
5.	MIL-PRF-17331 Steam Turbine Lube Oil (2190TEP) Applies to Surface Ship and Submarine, Lube Oil Systems (e.g. MRG, LPAC, MPAC, HPAC)	4
6.	MIL-PRF-17331 Steam Turbine Lube Oil (2190 TEP) Submarine Propulsion and Low Pressure Blower	4
7.	MIL-PRF-17331 Steam Turbine Lube Oil (2190 TEP) Controllable Pitch Propeller (CPP)/ Controllable Reversible Pitch Propeller (CRP) Surface Ship	5
8.	MIL-PRF-17331 Steam Turbine Oil as Hydraulic Fluid (2190 TEP) Submarines SS, SSN, SSBN, NR-1, NKTV Internal Hydraulic Systems (Main, Vital Ships Service, Independent Steering, Diving Missile Support)	5
9.	MIL-PRF-17672 Hydraulic Fluid (2075TH/2110TH/2135TH), Ballast Control Hydraulic Power Unit (HPU), RAST System Hydraulic Power Unit (WHPU) Lines A and G	6
10.	MIL-PRF-17672 Hydraulic Fluid (2075TH), RAST System Hydraulic Power Unit (WHPU) Reservoir, RAST System Hydraulic Power Unit (WHPU) Rope Accumulator	6
11.	MIL-PRF-17672 Hydraulic Fluid (2075TH), Submarine DSRV/DSS	7
12.	MIL-PRF-17672 Hydraulic Fluid (2135TH), Steering Gear, Surface Ship	7
13.	MIL-PRF-17672 Hydraulic Fluid (2075TH, 2110TH, 2135TH), Submarines SS, SSNM, SSBN, NR-1, NKTV External Hydraulic Systems	8
14.	MIL-H-19457 Hydraulic Fluid (HFR-1)	8
15.	MIL-H-22072 Hydraulic Fluid (HFC)	9
16.	MIL-PRF-23699 (Corrosion Inhibited) Gas Turbine Lube Oil	9
17.	MIL-PRF-83282 Hydraulic Fluid RAST System Rapid Securing Device (RSD)	9
18.	POE Synthetic Oil, R134a AC/Refrigeration Plants, Submarine	10
19.	POE Synthetic Oil, R134a and R236a AC/Refrigeration Plants, Surface Ship	10
20.	PR 1192 Hydraulic Fluid, Submarines SS, SSN, SSBN, NR-1, NKTV External Hydraulic Systems	11
21.	SAE J2360 (MIL-PRF-2105) Gear Oil (80W-90)	11
22.	VV-L-825 Refrigerant Compressor Oil R-12 and R-114 A/C Refrigeration Plants MS RCO-2 (Type II; MS RCO-4 (Type 4)) Surface Ship and Submarine	12

TABLE 1. MIL-L-2104 (15W-40) Diesel Lube Oil, Surface ship and Submarine

Test	Limits *	Recommendation **	Reference
Spectrometric Required	Refer to tables in JOAP Manual Vol IV by T/M/S		
Water (Crackle) Or Water ASTM D 6304 (Karl Fisher)	Pass/Fail 2000 PPM (0.20%) Maximum	Determine source and repair. Purify or change oil	NSTM 262
Viscosity (cSt) at 104 °F/40°C	<85 Unacceptable	Immediately determine source of fuel leak and change oil prior to running.	NSTM 262
	85 to 144 Acceptable	None	
	>144 Unacceptable	Change oil at next scheduled opportunity.	
Fuel Dilution, %	0.0 to <2.0 Acceptable	None	NSTM 262
	2.0 to <3.5 Marginal	Determine cause and repair.	
	3.5 to <5.0 Warning	Determine cause, repair, change oil.	
	≥5.0 Unacceptable	Immediately determine cause, repair, and change oil prior to running.	

Notes: * These limits do not apply to surface ships in the Diesel Readiness System (DRS) program. Report DRS results with no recommendation
** Resample if results may not be indicative of actual system condition.

TABLE 2. MIL-PRF-5606 Hydraulic Fluid

Test	Limits		Recommendation	Reference
Water ASTM D 6304 (Karl Fisher)	500 PPM (0.05%) Maximum		Filter or Change oil.	
Particle Count (Electronic)	NAS 1638 Class 9 Ranges included:		Replace system filters. Filter oil or replace oil.	
	Size	Max		
	15-25	22,800		
	25-50	4,050		
	50-100	720		
	100+	128		

TABLE 3. MIL-L-9000 Diesel Lube Oil (MS-9250), Surface Ship and Submarine

Test	Limits *	Recommendation **	Reference
Spectrometric Required	Refer to tables in JOAP Manual Vol IV by T/M/S		
Water (Crackle) Or Water by ASTM D 6304	Pass/Fail Pass (0.20% max.)	Determine source and repair. Purify or change oil.	NSTM 262
Viscosity (cSt) at 104 °F/40°C	<90 Unacceptable	Immediately determine source of fuel leak and change oil prior to running.	NSTM 262
	90 to 200 Acceptable	None	
	>200 Unacceptable	Change oil at next scheduled opportunity.	
Fuel Dilution, %	0.0 to <2.0 Acceptable	None	NSTM 262
	2.0 to <3.5 Marginal	Determine Cause and repair,	
	3.5 to <5.0 Warning	Determine cause, repair and change oil.	
	≥5.0 Unacceptable	Immediately determine cause, repair, and change oil prior to running.	

Notes: * These limits do not apply to surface ships in the Diesel Readiness System (DRS) program. Report DRS results with no recommendation
** Resample if results may not be indicative of actual system condition.

TABLE 4. MIL-DTL-17111 Hydraulic Fluid

Test	Limits		Recommendation	Reference
Water ASTM D 6304 (Karl Fisher)	500 PPM (0.05%) max.		Filter or Change oil.	
Particle Count (Electronic)	NAS 1638 Class 9 Ranges included:		Replace system filters. Filter oil or replace oil.	
	Size	Max		
	15-25	22,800		
	25-50	4,050		
	50-100	720		
	100+	128		

TABLE 5. MIL-L-17331 Steam Turbine Lube Oil (2190TEP)
Applies to Surface Ship and Submarine
Lube Oil Systems (e.g.MRG, LPAC, MPAC, HPAC)

Test	Limits			Recommendation	Reference
Spectrometric	Refer to tables in JOAP Manual Vol IV by T/M/S				
Water ASTM D 6304 (Karl Fisher)	1000 PPM (0.10%) Maximum			Change or renovate oil	NSTM 262
Total Acid Number, mg KOH/g	0.50 Maximum			Change Oil	NSTM 262
Viscosity (cSt) at 104°F/40°C		Min	Max		NSTM 262
	Gears	74	97	Acceptable	
	Other Systems *	70	73	Notify	
		74	97	Acceptable	

TABLE 6. MIL-L-17331 Steam Turbine Lube Oil (2190 TEP) Submarine Propulsion and Low Pressure Blower

Test	Limits			Recommendation	Reference
Spectrometric	Refer to tables in JOAP Manual Vol IV				
Water ASTM D 6304 (Karl Fisher)	500 PPM (0.05%) Maximum			Change or purify oil.	
Total Acid Number, mg KOH/g	0.50 Maximum			Change oil.	NSTM 262
Viscosity (cSt) at 104°F/40°C		Min	Max		NSTM 262
	Gears	74	97	Acceptable	
	Other Systems *	70	73	Notify	
		74	97	Acceptable	

TABLE 7. MIL-L-17331 Steam Turbine Lube Oil (2190 TEP) Controllable Pitch Propeller (CPP)/ Controllable Reversible Pitch Propeller (CRP) Surface Ship

Test	Limits		Recommendation	Reference
Spectrometric	Refer to tables in JOAP Manual Vol IV			
Water ASTM D 6304 (Karl Fisher)	500 PPM (0.05%) max.		Purify or Change oil.	NSTM 262
Total Acid Number, mg KOH/g	0.50 Maximum		Change oil	NSTM 262
Viscosity, (cSt) at 104ºF/40ºC	Min	Max	Acceptable Notify	NSTM 262
	74	97		
	70	73		
Particle Count (Electronic)	NAS 1638 Class 8 Ranges included:		Purify or filter the oil	NSTM 262
	Size	Max		
	5-15	64,000		
	15-25	11,400		
	25-50	2,025		
	50-100	360		
	100+	64		

TABLE 8. MIL-L-17331 Steam Turbine Oil as Hydraulic Fluid (2190 TEP) Submarines SS, SSN, SSBN, NR-1, NKTV Internal Hydraulic Systems (Main, Vital Ships Service, Independent Steering, Diving Missile Support)

Test	Limits		Recommendation	Reference
Water ASTM D 6304 (Karl Fisher)	500 PPM (0.05%) max.		Perform spectrometric testing if water is above 500 PPM to determine salt or fresh water contamination. Filter or change oil.	NSTM 556
Particle Count (Electronic)	NAS 1638 Class 8 Ranges included:		Replace system filters. Filter oil	NSTM 556
	Size	Max		
	5-15	*Report*		
	15-25	22,800		
	25-50	4,050		
	50-100	720		
	100+	128		

Note 5-15 range is not a part of the particle count requirement. Report only

TABLE 9. MIL-PRF-17672 Hydraulic Fluid (2075TH/2110TH/2135TH), Ballast Control Hydraulic Power Unit (HPU), RAST System Hydraulic Power Unit (WHPU) Lines A and G

Test	Limits		Recommendation	Reference
Water ASTM D 6304 (Karl Fisher)	500 PPM (0.05%) max.		Filter or Change oil.	NSTM 556
Particle Count (Electronic)	NAS 1638 Class 8 Ranges included:		Purify or filter the oil	NSTM 556
	Size	Max		
	5-15	64,000		
	15-25	11,400		
	25-50	2,025		
	50-100	360		
	100+	64		

TABLE 10. MIL-PRF-17672 Hydraulic Fluid (2075TH), RAST System Hydraulic Power Unit (WHPU) Reservoir, RAST System Hydraulic Power Unit (WHPU) Rope Accumulator

Test	Limits		Recommendation	Reference
Water ASTM D 6304 (Karl Fisher)	500 PPM (0.05%) max.		Filter or Change oil.	
Particle Count (Electronic)	NAS 1638 Class 10 Ranges included:		Replace system filters. Filter oil or change oil.	
	Size	Max		
	5-15	*Note*		
	15-25	45,600		
	25-50	8,100		
	50-100	1,440		
	100+	256		

Note 5-15 range is not a part of the particle count requirement. Report only.

TABLE 11. MIL-PRF-17672 Hydraulic Fluid (2075TH), Submarine DSRV/DSS

Test	Limits		Recommendation	Reference
Water ASTM D 6304 (Karl Fisher)	500 PPM (0.05%) Maximum		Filter or Change oil.	NSTM 556
Particle Count (Electronic) Operating limits, not for overhaul	NAS 1638 Class 10 Ranges included:		Replace system filters. Filter oil.	NSTM 556
	Size	Max		
	5-15	256,000		
	15-25	45,600		
	25-50	8,100		
	50-100	1,440		
	100+	256		

TABLE 12. MIL-PRF-17672 Hydraulic Fluid (2135TH), Steering Gear, Surface Ship

Test	Limits		Recommendation	Reference
Water ASTM D 6304 (Karl Fisher)	500 PPM (0.05%) max.		Filter or Change oil.	NSTM 562
Particle Count (Electronic)	NAS 1638 Class 8 Ranges included:		Replace system filters. Filter oil.	NSTM 562
	Size	Max		
	5-15	64,000		
	15-25	11,400		
	25-50	2,025		
	50-100	360		
	100+	64		

TABLE 13. MIL-PRF-17672 Hydraulic Fluid (2075TH, 2110TH, 2135TH), Submarines SS, SSNM, SSBN, NR-1, NKTV External Hydraulic Systems

Test	Limits		Recommendation	Reference
Water ASTM D 6304 (Karl Fisher)	500 PPM (0.05%) max.		Perform spectrometric testing if water is above 500 PPM to determine salt or fresh water contamination. Filter or Change oil.	NSTM 556
Particle Count (Electronic)	NAS 1638 Class 10 Ranges included:		Replace system filters. Filter oil.	NSTM 556
	Size	Max		
	5-15	*Report*		
	15-25	45,600		
	25-50	8,100		
	50-100	1,440		
	100+	256		

Note 5-15 range is not a part of the particle count requirement. Report only.

TABLE 14. MIL-H-19457 Hydraulic Fluid (HFR-1)

Test	Limits		Recommendation	Reference
Water ASTM D 6304 (Karl Fisher)	3000 PPM (0.3%) max.		Filter or Change oil.	
Total Acid Number, mg KOH/g	0.3 Maximum		Change oil	
Particle Count (Electronic)	NAS 1638 Class 12 Ranges included:		Replace system filters. Filter oil or replace oil.	
	Size	Max		
	15-25	182,400		
	25-50	32,400		
	50-100	5,760		
	100+	1,024		

TABLE 15. MIL-H-22072 Hydraulic Fluid (HFC)

Test	Limits		Recommendation	Reference
Viscosity (cSt) at 104ºF/40ºC	Min	Max	Change Oil	
	41	51		
Particle Count (Electronic)	NAS 1638 Class 9 Ranges included:		Replace system filters. Filter oil or replace oil.	
	Size	Max		
	15-25	22,800		
	25-50	4,050		
	50-100	720		
	100+	128		

TABLE 16. MIL-PERF-23699 (Corrosion Inhibited) Gas Turbine Lube Oil

Test	Limits		Recommendation	Reference
Spectrometric	Refer to tables in JOAP Manual Vol IV by T/M/S			
Viscosity (cSt) at 104°F/40°C	Min	Max	Change oil.	NSTM 262
	23	35		
Total Acid Number, mg KOH/g	0 to 1.5 Acceptable		None	NSTM 262
	>1.5 to 2.0 Alerted		Oil is SAT, but shall be sampled at half of normal periodicity.	
	>2.0 Unacceptable		Change Oil	
Water ASTM D 6304 (Karl Fisher)	*Report Only* (No Requirements)			

TABLE 17. MIL-PRF-83282 Hydraulic Fluid RAST System Rapid Securing Device (RSD)

Test	Limits		Recommendation	Reference
Water ASTM D 6304 (Karl Fisher)	500 PPM (0.05%) max.		Filter or Change oil.	
Particle Count (Electronic)	NAS 1638 Class 10 Ranges included:		Replace system filters. Filter oil or replace oil.	
	Size	Max		
	5-15	256,000		
	15-25	45,600		
	25-50	8,100		
	50-100	1,440		
	100+	256		

TABLE 18. POE Synthetic Oil, R134a AC/Refrigeration Plants, Submarine

Test	Limits	Recommendation	Reference
Spectrometric	Refer to tables in JOAP Manual Vol IV		
Water ASTM D 6304 (Karl Fisher)	200 PPM (0.02 %) maximum	Change oil.	MIP A-006/903, MRC 7CRW
Total Acid Number, mg KOH/g	0.30 Maximum	Change oil.	MIP A-006/903, MRC 7CRW

TABLE 19. POE Synthetic Oil, R134a and R236a AC/Refrigeration Plants, Surface Ship

Test	Limits	Recommendation	Reference
Spectrometric	Refer to tables in JOAP Manual Vol IV		
Water ASTM D 6304 (Karl Fisher)	300 PPM (0.03 %) maximum	Change oil.	NSTM 516
Total Acid Number, mg KOH/g	0.30 Maximum	Change oil.	NSTM 516

TABLE 20. PR 1192 Hydraulic Fluid, Submarines SS, SSN, SSBN, NR-1, NKTV External Hydraulic Systems

Test	Limits		Recommendation	Reference
Water ASTM D 6304 (Karl Fisher)	1000 PPM (1%) Maximum		Perform spectrometric testing if water is above 500 PPM to determine salt or fresh water contamination. Filter or Change oil.	NSTM 556
Particle Count (Electronic)	NAS 1638 Class 10 Ranges included:		Replace system filters. Filter oil.	NSTM 556
	Size	Max		
	5-15	*Report*		
	15-25	45,600		
	25-50	8,100		
	50-100	1,440		
	100+	256		

TABLE 21. SAE J2360 (MIL-PRF-2105) Gear Oil (80W-90)

Test	Limits		Recommendation	Reference
Spectrometric	Refer to tables in JOAP Manual Vol IV			
Water ASTM D 6304 (Karl Fisher)	3000 PPM (0.30%) Maximum		Determine source and repair. Remove water or change oil	OEM Recommendation
Total Acid Number, mg KOH/g	3.50 Maximum		Change oil.	OEM Recommendation
Viscosity (cSt) at 104°F/40°C	Min	Max	Change oil.	OEM Recommendation
	74	97		

Note 5-15 range is not a part of the particle count requirement. Report only.

TABLE 22. VV-L-825 Refrigerant Compressor Oil R-12 and R-114 A/C Refrigeration Plants MS RCO-2 (Type II; MS RCO-4 (Type 4)) Surface Ship and Submarine

Test	Limits	Recommendation	Reference
Spectrometric	Refer to tables in JOAP Manual Vol IV by T/M/S		
Water ASTM D 6304 (Karl Fisher)	100 PPM (0.01%) Maximum	Change Oil	NSTM 516
Total Acid Number, mg KOH/g	(Surface Ships) 0.10 Maximum (Submarines) 0.07 Maximum	Change Oil	NSTM 516

TYPE EQUIPMENT: GAS TURBINE

SYSTEM/USE: MAIN PROPULSION

EQUIPMENT MODEL: GE-LM2500

	Fe	Ag	Al	Cr	Cu	Mg	Pb	Sn	Ni	Si
Normal Range	0-2				0-4	0-22				0-11
Marginal Range	3-5				5-9	23-52				12-29
High Range	6-10				10-14	53-64				30-40
Abnormal	11+				15+	65+				41+
Abnormal Trend (PPM Increase in 10 Hrs)										

Average Concentration Other Elements:

This Page Intentionally Left Blank

TYPE EQUIPMENT: GAS TURBINE

SYSTEM/USE: SHIPS SERVICE GENERATOR

EQUIPMENT MODEL: ALLISON 501K

	Fe	Ag	Al	Cr	Cu	Mg	Pb	Sn	Ni	Si
Normal Range	0-2				0-4					
Marginal Range	3-5				5-9					
High Range	6-10				10-14					
Abnormal	11+				15+					
Abnormal Trend (PPM Increase in 10 Hrs)										

Average Concentration Other Elements:

This Page Intentionally Left Blank

TYPE EQUIPMENT: **DIESEL ENGINE**

SYSTEM/USE: **MAIN PROPULSION**

EQUIPMENT MODEL: **ALCO 12 251-C**

	Fe	Ag	Al	Cr	Cu	Mg	Pb	Sn	Ni	Si
Normal Range	0-17		0-4	0-4	0-11	0-22	0-11		0-2	0-11
Marginal Range	18-34		5-9	5-9	12-29	23-52	12-29		3-5	12-29
High Range	35-48		10-14	10-14	30-40	53-64	30-40		6-10	30-40
Abnormal	49+		15+	15+	41+	65+	41+		11+	41+
Abnormal Trend (PPM Increase in 10 Hrs)										

Average Concentration Other Elements:

This Page Intentionally Left Blank

TYPE EQUIPMENT: **DIESEL ENGINE**

SYSTEM/USE: **MAIN PROPULSION**

EQUIPMENT MODEL: **ALCO 16 251-C**

	Fe	Ag	Al	Cr	Cu	Mg	Pb	Sn	Ni	Si
Normal Range	0-22		0-5	0-7	0-19	0-22	0-7		0-2	0-11
Marginal Range	23-52		6-13	8-15	20-42	23-52	8-15		3-5	12-29
High Range	53-64		14-20	16-25	43-55	53-64	16-25		6-10	30-40
Abnormal	65+		21+	26+	56+	65+	26+		11+	41+
Abnormal Trend (PPM Increase in 10 Hrs)										

Average Concentration Other Elements:

This Page Intentionally Left Blank

TYPE EQUIPMENT: DIESEL ENGINE

SYSTEM/USE: MAIN PROPULSION

EQUIPMENT MODEL: CATERPILLAR 16 D399

	Fe	Ag	Al	Cr	Cu	Mg	Pb	Sn	Ni	Si
Normal Range	0-29		0-7	0-4	0-29	0-22	0-7		0-2	0-11
Marginal Range	30-59		8-15	5-9	30-59	23-52	8-15		3-5	12-29
High Range	60-80		16-25	10-14	60-80	53-64	16-25		6-10	30-40
Abnormal	81+		26+	15+	81+	65+	26+		11+	41+
Abnormal Trend (PPM Increase in 10 Hrs)										

Average Concentration Other Elements:

This Page Intentionally Left Blank

TYPE EQUIPMENT: DIESEL ENGINE

SYSTEM/USE: MAIN PROPULSION

EQUIPMENT MODEL: CUMMINS VT12-0875MPH/LH1X2

	Fe	Ag	Al	Cr	Cu	Mg	Pb	Sn	Ni	Si
Normal Range	0-11		0-2	0-4	0-17	0-22	0-5		0-2	0-11
Marginal Range	12-29		3-5	5-9	18-34	23-52	6-13		3-5	12-29
High Range	30-40		6-10	10-14	35-48	53-64	14-20		6-10	30-40
Abnormal	41+		11+	15+	49+	65+	21+		11+	41+
Abnormal Trend (PPM Increase in 10 Hrs)										

Average Concentration Other Elements:

This Page Intentionally Left Blank

TYPE EQUIPMENT: DIESEL ENGINE

SYSTEM/USE: MAIN PROPULSION

EQUIPMENT MODEL: CUMMINS VT12-875MRH/LH

	Fe	Ag	Al	Cr	Cu	Mg	Pb	Sn	Ni	Si
Normal Range	0-17		0-2	0-4	0-11	0-22	0-14		0-2	0-11
Marginal Range	18-34		3-5	5-9	12-29	23-52	15-30		3-5	12-29
High Range	35-48		6-10	10-14	30-40	53-64	31-45		6-10	30-40
Abnormal	49+		11+	15+	41+	65+	46+		11+	41+
Abnormal Trend (PPM Increase in 10 Hrs)										

Average Concentration Other Elements:

This Page Intentionally Left Blank

TYPE EQUIPMENT: DIESEL ENGINE

SYSTEM/USE: MAIN PROPULSION

EQUIPMENT MODEL: DETROIT DIESEL (GM) 12005; 12006

	Fe	Ag	Al	Cr	Cu	Mg	Pb	Sn	Ni	Si
Normal Range	0-99		0-7	0-5	0-7	0-22	0-11			0-11
Marginal Range	100-144		8-15	6-13	8-15	23-52	12-29			12-29
High Range	145-170		16-25	14-20	16-25	53-64	30-40			30-40
Abnormal	171+		26+	21+	26+	65+	41+			41+
Abnormal Trend (PPM Increase in 10 Hrs)										

Average Concentration Other Elements:

This Page Intentionally Left Blank

TYPE EQUIPMENT: DIESEL ENGINE

SYSTEM/USE: MAIN PROPULSION

EQUIPMENT MODEL: DETROIT DIESEL (GM) 12VA6217

	Fe	Ag	Al	Cr	Cu	Mg	Pb	Sn	Ni	Si
Normal Range	0-64		0-5		0-7	0-22				0-11
Marginal Range	65-109		6-13		8-15	23-52				12-29
High Range	110-135		14-20		16-25	53-64				30-40
Abnormal	136+		21+		26+	65+				41+
Abnormal Trend (PPM Increase in 10 Hrs)										

Average Concentration Other Elements:

This Page Intentionally Left Blank

TYPE EQUIPMENT: DIESEL ENGINE

SYSTEM/USE: MAIN PROPULSION

EQUIPMENT MODEL: DETROIT DIESEL (GM) 6-71; 12007M

	Fe	Ag	Al	Cr	Cu	Mg	Pb	Sn	Ni	Si
Normal Range	0-94		0-5	0-5	0-19	0-22	0-17			0-11
Marginal Range	95-139		6-13	6-13	20-42	23-52	18-34			12-29
High Range	140-165		14-20	14-20	43-55	53-64	35-48			30-40
Abnormal	166+		21+	21+	56+	65+	49+			41+
Abnormal Trend (PPM Increase in 10 Hrs)										

Average Concentration Other Elements:

This Page Intentionally Left Blank

TYPE EQUIPMENT: DIESEL ENGINE

SYSTEM/USE: MAIN PROPULSION

EQUIPMENT MODEL: DETROIT DIESEL (GM) 6V53N

	Fe	Ag	Al	Cr	Cu	Mg	Pb	Sn	Ni	Si
Normal Range	0-17				0-7	0-22				0-11
Marginal Range	18-34				8-15	23-52				12-29
High Range	35-48				16-25	53-65				30-40
Abnormal	49+				26+	66+				41+
Abnormal Trend (PPM Increase in 10 Hrs)										

Average Concentration Other Elements:

This Page Intentionally Left Blank

TYPE EQUIPMENT: DIESEL ENGINE

SYSTEM/USE: MAIN PROPULSION

EQUIPMENT MODEL: ELECTRO MOTIVE (GM) 12-268A

	Fe	Ag	Al	Cr	Cu	Mg	Pb	Sn	Ni	Si
Normal Range	0-19		0-2	0-9	0-26	0-22	0-14		0-2	0-11
Marginal Range	20-42		3-5	10-24	27-55	23-52	15-30		3-5	12-29
High Range	43-55		6-10	25-30	56-72	53-64	31-45		6-10	30-40
Abnormal	56+		11+	31+	73+	65+	46+		11+	41+
Abnormal Trend (PPM Increase in 10 Hrs)										

Average Concentration Other Elements:

This Page Intentionally Left Blank

TYPE EQUIPMENT: DIESEL ENGINE

SYSTEM/USE: MAIN PROPULSION

EQUIPMENT MODEL: ELECTRO MOTIVE (GM) 16-248

	Fe	Ag	Al	Cr	Cu	Mg	Pb	Sn	Ni	Si
Normal Range	0-19		0-2	0-4	0-17	0-22	0-11		0-2	0-11
Marginal Range	20-42		3-5	5-9	18-34	23-52	12-29		3-5	12-29
High Range	43-55		6-10	10-14	35-48	53-64	30-40		6-10	30-40
Abnormal	56+		11+	15+	49+	65+	41+		11+	41+
Abnormal Trend (PPM Increase in 10 Hrs)										

Average Concentration Other Elements:

This Page Intentionally Left Blank

TYPE EQUIPMENT: DIESEL ENGINE

SYSTEM/USE: MAIN PROPULSION

EQUIPMENT MODEL: ELECTRO MOTIVE (GM) 12-278

	Fe	Ag	Al	Cr	Cu	Mg	Pb	Sn	Ni	Si
Normal Range	0-24		0-5		0-14	0-22	0-11			0-11
Marginal Range	25-54		6-13		15-30	23-52	12-29			12-29
High Range	55-68		14-20		31-45	53-64	30-40			30-40
Abnormal	69+		21+		46+	65+	41+			41+
Abnormal Trend (PPM Increase in 10 Hrs)										

Average Concentration Other Elements:

This Page Intentionally Left Blank

TYPE EQUIPMENT: **DIESEL ENGINE**

SYSTEM/USE: **MAIN PROPULSION**

EQUIPMENT MODEL: **ELECTRO (GM) 8-278ANN**

	Fe	Ag	Al	Cr	Cu	Mg	Pb	Sn	Ni	Si
Normal Range	0-9		0-2	0-14	0-22	0-22	0-11		0-2	0-11
Marginal Range	10-24		3-5	15-30	23-52	23-52	12-29		3-5	12-29
High Range	25-30		6-10	31-45	53-64	53-64	30-40		6-10	30-40
Abnormal	31+		11+	46+	65+	65+	41+		11+	41+
Abnormal Trend (PPM Increase in 10 Hrs)										

Average Concentration Other Elements:

This Page Intentionally Left Blank

TYPE EQUIPMENT: DIESEL ENGINE

SYSTEM/USE: MAIN PROPULSION

EQUIPMENT MODEL: ELECTRO (GM) 8-498NN

	Fe	Ag	Al	Cr	Cu	Mg	Pb	Sn	Ni	Si
Normal Range	0-26	0-4	0-4	0-4	0-24	0-22	0-9		0-2	0-11
Marginal Range	27-55	5-9	5-9	5-9	25-54	23-52	10-24		3-5	12-29
High Range	56-72	10-14	10-14	10-14	55-68	53-64	25-30		6-10	30-40
Abnormal	73+	15+	15+	15+	69+	65+	31+		11+	41+
Abnormal Trend (PPM Increase in 10 Hrs)										

Average Concentration Other Elements:

This Page Intentionally Left Blank

TYPE EQUIPMENT: DIESEL ENGINE

SYSTEM/USE: MAIN PROPULSION

EQUIPMENT MODEL: ELECTRO (GM) 16-645E5LLRRLR

	Fe	Ag	Al	Cr	Cu	Mg	Pb	Sn	Ni	Si
Normal Range	0-22		0-2	0-2	0-24	0-22	0-7		0-2	0-11
Marginal Range	23-52		3-5	3-5	25-54	23-52	8-15		3-5	12-29
High Range	53-64		6-10	6-10	55-68	53-64	16-25		6-10	30-40
Abnormal	65+		11+	11+	69+	65+	26+		11+	41+
Abnormal Trend (PPM Increase in 10 Hrs)										

Average Concentration Other Elements:

This Page Intentionally Left Blank

TYPE EQUIPMENT: DIESEL ENGINE

SYSTEM/USE: MAIN PROPULSION

EQUIPMENT MODEL: FM (COLT) 10-38D8 1/8

	Fe	Ag	Al	Cr	Cu	Mg	Pb	Sn	Ni	Si
Normal Range	0-26		0-5	0-4	0-9	0-22	0-11		0-4	0-11
Marginal Range	27-55		6-13	5-9	10-24	23-52	12-29		5-9	12-29
High Range	56-72		14-20	10-14	25-30	53-64	30-40		10-14	30-40
Abnormal	73+		21+	15+	31+	65+	41+		15+	41+
Abnormal Trend (PPM Increase in 10 Hrs)										

Average Concentration Other Elements:

This Page Intentionally Left Blank

TYPE EQUIPMENT: DIESEL ENGINE

SYSTEM/USE: MAIN PROPULSION

EQUIPMENT MODEL: FM (COLT) 10-38NTD8 1/8

	Fe	Ag	Al	Cr	Cu	Mg	Pb	Sn	Ni	Si
Normal Range	0-14		0-4	0-7	0-9	0-22	0-11		0-2	0-11
Marginal Range	15-30		5-9	8-15	10-24	23-52	12-29		3-5	12-29
High Range	31-45		10-14	16-25	25-30	53-64	30-40		6-10	30-40
Abnormal	46+		15+	26+	31+	65+	41+		11+	41+
Abnormal Trend (PPM Increase in 10 Hrs)										

Average Concentration Other Elements:

This Page Intentionally Left Blank

TYPE EQUIPMENT: DIESEL ENGINE

SYSTEM/USE: MAIN PROPULSION

EQUIPMENT MODEL: FM (COLT) 12-38ND8 1/8

	Fe	Ag	Al	Cr	Cu	Mg	Pb	Sn	Ni	Si
Normal Range	0-19		0-7	0-9	0-9	0-22	0-11		0-2	0-11
Marginal Range	20-42		8-15	10-24	10-24	23-52	12-29		3-5	12-29
High Range	43-55		16-25	25-30	25-30	53-64	30-40		6-10	30-40
Abnormal	56+		26+	31+	31+	65+	41+		11+	41+
Abnormal Trend (PPM Increase in 10 Hrs)										

Average Concentration Other Elements:

This Page Intentionally Left Blank

TYPE EQUIPMENT: DIESEL ENGINE

SYSTEM/USE: MAIN PROPULSION

EQUIPMENT MODEL: FM (COLT) 8-38ND8 1/8

	Fe	Ag	Al	Cr	Cu	Mg	Pb	Sn	Ni	Si
Normal Range	0-19		0-4	0-17	0-22	0-22	0-11		0-2	0-11
Marginal Range	20-42		5-9	18-34	23-52	23-52	12-29		3-5	12-29
High Range	43-55		10-14	35-48	53-64	53-64	30-40		6-10	30-40
Abnormal	56+		15+	49+	65+	65+	41+		11+	41+
Abnormal Trend (PPM Increase in 10 Hrs)										

Average Concentration Other Elements:

This Page Intentionally Left Blank

TYPE EQUIPMENT: DIESEL ENGINE

SYSTEM/USE: MAIN PROPULSION

EQUIPMENT MODEL: GM 16-645E2

	Fe	Ag	Al	Cr	Cu	Mg	Pb	Sn	Ni	Si
Normal Range	0-14	0-2	0-14	0-4	0-17	0-22	0-11	0-2	0-2	0-11
Marginal Range	15-30	3-5	15-30	5-9	18-34	23-52	12-29	3-5	3-5	12-29
High Range	31-45	6-10	16-45	10-14	35-48	53-64	30-40	6-10	6-10	30-40
Abnormal	46+	11+	46+	15+	49+	65+	41+	11+	11+	41+
Abnormal Trend (PPM Increase in 10 Hrs)										

Average Concentration Other Elements:

This Page Intentionally Left Blank

TYPE EQUIPMENT: DIESEL ENGINE

SYSTEM/USE: MAIN PROPULSION

EQUIPMENT MODEL: GM 8V-71T

	Fe	Ag	Al	Cr	Cu	Mg	Pb	Sn	Ni	Si
Normal Range	0-94		0-5	0-5	0-17	0-22	0-17	0-17		0-11
Marginal Range	95-139		6-13	6-13	18-34	23-52	18-34	18-34		12-29
High Range	140-165		14-20	14-20	35-48	53-64	35-48	35-48		30-40
Abnormal	166+		21+	21+	49+	65+	49+	49+		41+
Abnormal Trend (PPM Increase in 10 Hrs)										

Average Concentration Other Elements:

This Page Intentionally Left Blank

TYPE EQUIPMENT: DIESEL ENGINE

SYSTEM/USE: MAIN PROPULSION

EQUIPMENT MODEL: PACKARD ID-1700-T3/T4

	Fe	Ag	Al	Cr	Cu	Mg	Pb	Sn	Ni	Si
Normal Range	0-17		0-7	0-4	0-14	0-22	0-7		0-2	0-11
Marginal Range	18-34		8-15	5-9	15-30	23-52	8-15		3-5	12-29
High Range	35-48		16-25	10-14	31-45	53-64	16-25		6-10	30-40
Abnormal	49+		26+	15+	46+	65+	26+		11+	41+
Abnormal Trend (PPM Increase in 10 Hrs)										

Average Concentration Other Elements:

This Page Intentionally Left Blank

TYPE EQUIPMENT: DIESEL ENGINE

SYSTEM/USE: MAIN PROPULSION

EQUIPMENT MODEL: RUSTON PAXMAN 12-YCLM

	Fe	Ag	Al	Cr	Cu	Mg	Pb	Sn	Ni	Si
Normal Range	0-36		0-14	0-4	0-17	0-22	0-9	0-2		0-11
Marginal Range	37-69		15-30	5-9	18-34	23-52	10-24	3-5		12-29
High Range	70-92		31-45	10-14	35-48	53-64	25-30	6-10		30-40
Abnormal	93+		46+	15+	49+	65+	31+	11+		41+
Abnormal Trend (PPM Increase in 10 Hrs)										

Average Concentration Other Elements:

This Page Intentionally Left Blank

TYPE EQUIPMENT: DIESEL ENGINE

SYSTEM/USE: MAIN PROPULSION

EQUIPMENT MODEL: WAUKESHA L1616DSIN/TO

	Fe	Ag	Al	Cr	Cu	Mg	Pb	Sn	Ni	Si
Normal Range	0-19		0-11	0-7	0-19	0-22	0-9		0-2	0-11
Marginal Range	20-42		12-29	8-15	20-42	23-52	10-24		3-5	12-29
High Range	43-55		30-40	16-25	43-55	53-64	25-30		6-10	30-40
Abnormal	56+		41+	26+	56+	65+	31+		11+	41+
Abnormal Trend (PPM Increase in 10 Hrs)										

Average Concentration Other Elements:

This Page Intentionally Left Blank

TYPE EQUIPMENT: DIESEL ENGINE

SYSTEM/USE: SHIPS SERVICE GENERATOR

EQUIPMENT MODEL: ALCO 8-251E

	Fe	Ag	Al	Cr	Cu	Mg	Pb	Sn	Ni	Si
Normal Range	0-17		0-5	0-7	0-11	0-22	0-9		0-2	0-11
Marginal Range	18-34		6-13	8-15	12-29	23-52	10-24		3-5	12-29
High Range	35-48		14-20	16-25	30-40	53-64	25-30		6-10	30-40
Abnormal	49+		21+	26+	41+	65+	31+		11+	41+
Abnormal Trend (PPM Increase in 10 Hrs)										

Average Concentration Other Elements:

This Page Intentionally Left Blank

TYPE EQUIPMENT: DIESEL ENGINE

SYSTEM/USE: SHIPS SERVICE GENERATOR

EQUIPMENT MODEL: CATERPILLAR 6-D-353

	Fe	Ag	Al	Cr	Cu	Mg	Pb	Sn	Ni	Si
Normal Range	0-26		0-11	0-7	0-11	0-22	0-11		0-2	0-11
Marginal Range	27-55		12-29	8-15	12-29	23-52	12-29		3-5	12-29
High Range	56-72		30-40	16-25	30-40	53-64	30-40		6-10	30-40
Abnormal	73+		41+	26+	41+	65+	41+		11+	41+
Abnormal Trend (PPM Increase in 10 Hrs)										

Average Concentration Other Elements:

This Page Intentionally Left Blank

TYPE EQUIPMENT: DIESEL ENGINE

SYSTEM/USE: SHIPS SERVICE GENERATOR

EQUIPMENT MODEL: CATERPILLAR D353

	Fe	Ag	Al	Cr	Cu	Mg	Pb	Sn	Ni	Si
Normal Range	0-34	0-2	0-9	0-4	0-22	0-22	0-11	0-2	0-2	0-11
Marginal Range	35-65	3-5	10-24	5-9	23-52	23-52	12-29	3-5	3-5	12-29
High Range	66-85	6-10	25-30	10-14	53-64	53-64	30-40	6-10	6-10	30-40
Abnormal	86+	11+	31+	15+	65+	65+	41+	11+	11+	41+
Abnormal Trend (PPM Increase in 10 Hrs)										

Average Concentration Other Elements:

This Page Intentionally Left Blank

TYPE EQUIPMENT: DIESEL ENGINE

SYSTEM/USE: SHIPS SERVICE GENERATOR

EQUIPMENT MODEL: CUMMINS 6-NH220GPG84

	Fe	Ag	Al	Cr	Cu	Mg	Pb	Sn	Ni	Si
Normal Range	0-36		0-9	0-4	0-14	0-22	0-14		0-2	0-11
Marginal Range	37-69		10-24	5-9	15-30	23-52	15-30		3-5	12-29
High Range	70-92		25-30	10-14	31-45	53-64	31-45		6-10	30-40
Abnormal	93+		31+	15+	46+	65+	46+		11+	41+
Abnormal Trend (PPM Increase in 10 Hrs)										

Average Concentration Other Elements:

This Page Intentionally Left Blank

TYPE EQUIPMENT: DIESEL ENGINE

SYSTEM/USE: SHIPS SERVICE GENERATOR

EQUIPMENT MODEL: CUMMINS 6-NH220PG92

	Fe	Ag	Al	Cr	Cu	Mg	Pb	Sn	Ni	Si
Normal Range	0-17		0-4	0-4	0-7	0-22	0-11		0-2	0-11
Marginal Range	18-34		5-9	5-9	8-15	23-52	12-29		3-5	12-29
High Range	35-48		10-14	10-14	16-25	53-64	30-40		6-10	
Abnormal	49+		15+	15+	26+	65+	41+		11+	41+
Abnormal Trend (PPM Increase in 10 Hrs)										

Average Concentration Other Elements:

This Page Intentionally Left Blank

TYPE EQUIPMENT: DIESEL ENGINE

SYSTEM/USE: SHIPS SERVICE GENERATOR

EQUIPMENT MODEL: GM CUMMINS 6-NT400GCM

	Fe	Ag	Al	Cr	Cu	Mg	Pb	Sn	Ni	Si
Normal Range	0-24		0-4	0-5	0-7	0-22	0-17		0-2	0-11
Marginal Range	25-54		5-9	6-13	8-15	23-52	18-34		3-5	12-29
High Range	55-68		10-14	14-20	16-25	53-64	35-48		6-10	30-40
Abnormal	69+		15+	21+	26+	65+	49+		11+	41+
Abnormal Trend (PPM Increase in 10 Hrs)										

Average Concentration Other Elements:

This Page Intentionally Left Blank

TYPE EQUIPMENT: DIESEL ENGINE

SYSTEM/USE: SHIPS SERVICE GENERATOR

EQUIPMENT MODEL: DETROIT DIESEL (GM) 16V-149 TI

	Fe	Ag	Al	Cr	Cu	Mg	Pb	Sn	Ni	Si
Normal Range	0-17		0-4	0-4	0-9	0-22	0-4	0-2		0-11
Marginal Range	18-34		5-9	5-9	10-24	23-52	5-9	3-5		12-29
High Range	35-48		10-14	10-14	25-30	53-64	10-14	6-10		30-40
Abnormal	49+		15+	15+	31+	65+	15+	11+		41+
Abnormal Trend (PPM Increase in 10 Hrs)										

Average Concentration Other Elements:

This Page Intentionally Left Blank

TYPE EQUIPMENT: DIESEL ENGINE

SYSTEM/USE: SHIPS SERVICE GENERATOR

EQUIPMENT MODEL: DETROIT DIESEL (GM) 16-7163-7200

	Fe	Ag	Al	Cr	Cu	Mg	Pb	Sn	Ni	Si
Normal Range	0-19		0-2	0-4	0-14	0-22	0-11		0-2	0-11
Marginal Range	20-42		3-5	5-9	15-30	23-52	12-29		3-5	12-29
High Range	43-55		6-10	10-14	31-45	53-64	30-40		6-10	30-40
Abnormal	56+		11+	15+	46+	65+	41+		11+	41+
Abnormal Trend (PPM Increase in 10 Hrs)										

Average Concentration Other Elements:

This Page Intentionally Left Blank

TYPE EQUIPMENT: DIESEL ENGINE

SYSTEM/USE: SHIPS SERVICE GENERATOR

EQUIPMENT MODEL: DETROIT DIESEL (GM) 16V-71

	Fe	Ag	Al	Cr	Cu	Mg	Pb	Sn	Ni	Si
Normal Range	0-29	0-2	0-9	0-4	0-9	0-22	0-5	0-2	0-2	0-11
Marginal Range	30-59	3-5	10-24	5-9	10-24	23-52	6-13	3-5	3-5	12-29
High Range	60-80	6-10	25-30	10-14	25-30	53-64	14-20	6-10	4-10	30-40
Abnormal	81+	11+	31+	15+	31+	65+	21+	11+	11+	41+
Abnormal Trend (PPM Increase in 10 Hrs)										

Average Concentration Other Elements:

This Page Intentionally Left Blank

TYPE EQUIPMENT: DIESEL ENGINE

SYSTEM/USE: SHIPS SERVICE GENERATOR

EQUIPMENT MODEL: DETROIT DIESEL (GM) 3-71-3151

	Fe	Ag	Al	Cr	Cu	Mg	Pb	Sn	Ni	Si
Normal Range	0-26		0-5	0-11	0-17	0-22	0-17			0-11
Marginal Range	27-55		6-13	12-29	18-34	23-52	18-34			12-29
High Range	56-72		14-20	30-40	35-48	53-64	35-48			30-40
Abnormal	73+		21+	41+	49+	65+	49+			41+
Abnormal Trend (PPM Increase in 10 Hrs)										

Average Concentration Other Elements:

This Page Intentionally Left Blank

TYPE EQUIPMENT: DIESEL ENGINE

SYSTEM/USE: SHIPS SERVICE GENERATOR

EQUIPMENT MODEL: DETROIT DIESEL (GM) 6-6151ENOD671RC

	Fe	Ag	Al	Cr	Cu	Mg	Pb	Sn	Ni	Si
Normal Range	0-24		0-2	0-11	0-9	0-22	0-17	0-5	0-2	0-11
Marginal Range	25-54		3-5	12-29	10-24	23-52	18-34	6-13	3-5	12-29
High Range	55-68		6-10	30-40	25-30	53-64	35-48	14-20	6-10	30-40
Abnormal	69+		11+	41+	31+	65+	49+	21+	11+	41+
Abnormal Trend (PPM Increase in 10 Hrs)										

Average Concentration Other Elements:

This Page Intentionally Left Blank

TYPE EQUIPMENT: DIESEL ENGINE

SYSTEM/USE: SHIPS SERVICE GENERATOR

EQUIPMENT MODEL: ELECTRO MOTIVE (GM) 3-268A

	Fe	Ag	Al	Cr	Cu	Mg	Pb	Sn	Ni	Si
Normal Range	0-22		0-2	0-17	0-14	0-22	0-22		0-2	0-11
Marginal Range	23-52		3-5	18-34	15-30	23-52	23-52		3-5	12-29
High Range	53-64		6-10	35-48	31-45	53-64	53-64		6-10	30-40
Abnormal	65+		11+	49+	46+	65+	65+		11+	41+
Abnormal Trend (PPM Increase in 10 Hrs)										

Average Concentration Other Elements:

This Page Intentionally Left Blank

TYPE EQUIPMENT: DIESEL ENGINE

SYSTEM/USE: SHIPS SERVICE GENERATOR

EQUIPMENT MODEL: ELECTRIC MOTIVE (GM) 8-268A

	Fe	Ag	Al	Cr	Cu	Mg	Pb	Sn	Ni	Si
Normal Range	0-29		0-2	0-19	0-14	0-22	0-9		0-2	0-11
Marginal Range	30-59		3-5	20-42	15-30	23-52	10-24		3-5	12-29
High Range	60-80		6-10	43-55	31-45	53-64	25-30		6-10	30-40
Abnormal	81+		11+	56+	46+	65+	31+		11+	41+
Abnormal Trend (PPM Increase in 10 Hrs)										

Average Concentration Other Elements:

This Page Intentionally Left Blank

TYPE EQUIPMENT: DIESEL ENGINE

SYSTEM/USE: SHIPS SERVICE GENERATOR

EQUIPMENT MODEL: ELECTRO MOTIVE (GM) 8-56CR

	Fe	Ag	Al	Cr	Cu	Mg	Pb	Sn	Ni	Si
Normal Range	0-7	0-2	0-2	0-4	0-9	0-22	0-11		0-2	0-11
Marginal Range	8-15	3-5	3-5	5-9	10-24	23-52	12-29		3-5	12-29
High Range	16-25	6-10	6-10	10-14	25-30	53-64	30-40		6-10	30-40
Abnormal	26+	11+	11+	15+	31+	65+	41+		11+	41+
Abnormal Trend (PPM Increase in 10 Hrs)										

Average Concentration Other Elements:

This Page Intentionally Left Blank

TYPE EQUIPMENT: DIESEL ENGINE

SYSTEM/USE: SHIPS SERVICE GENERATOR

EQUIPMENT MODEL: ELECTRO MOTIVE (GM) 12-645E2LL

	Fe	Ag	Al	Cr	Cu	Mg	Pb	Sn	Ni	Si
Normal Range	0-17	0-2	0-2	0-5	0-17	0-22	0-7		0-2	0-11
Marginal Range	18-34	3-5	3-5	6-03	18-34	23-52	8-15		3-5	12-29
High Range	35-48	6-10	6-10	14-20	35-48	53-64	16-25		6-10	30-40
Abnormal	49+	11+	11+	21+	49+	65+	26+		11+	41+
Abnormal Trend (PPM Increase in 10 Hrs)										

Average Concentration Other Elements:

This Page Intentionally Left Blank

TYPE EQUIPMENT: DIESEL ENGINE

SYSTEM/USE: SHIPS SERVICE GENERATOR

EQUIPMENT MODEL: FM (COLT) 8-38D8 1/8

	Fe	Ag	Al	Cr	Cu	Mg	Pb	Sn	Ni	Si	
Normal Range	0-17		0-4	0-7	0-9	0-22	0-11		0-2	0-11	
Marginal Range	18-34		5-9	8-15	10-24	23-52	12-29		3-5	12-29	
High Range	35-48		10-14	16-25	25-30	53-64	30-40		6-10	30-40	
Abnormal	49+		15+	26+	31+	65+	41+		11+	41+	
Abnormal Trend (PPM Increase in 10 Hrs)											

Average Concentration Other Elements:

This Page Intentionally Left Blank

TYPE EQUIPMENT: DIESEL ENGINE

SYSTEM/USE: SHIPS SERVICE GENERATOR

EQUIPMENT MODEL: GM 8-268

	Fe	Ag	Al	Cr	Cu	Mg	Pb	Sn	Ni	Si	
Normal Range	0-34		0-9	0-24	0-24	0-22	0-17			0-11	
Marginal Range	35-65		10-24	25-54	25-54	23-52	18-34			12-29	
High Range	66-85		25-30	55-68	55-68	53-64	35-48			30-40	
Abnormal	86+		31+	69+	69+	65+	49+			41+	
Abnormal Trend (PPM Increase in 10 Hrs)											

Average Concentration Other Elements:

This Page Intentionally Left Blank

TYPE EQUIPMENT: DIESEL ENGINE

SYSTEM/USE: SHIPS SERVICE GENERATOR

EQUIPMENT MODEL: GM 4-71

	Fe	Ag	Al	Cr	Cu	Mg	Pb	Sn	Ni	Si	
Normal Range	0-69		0-9		0-14	0-22	0-19			0-11	
Marginal Range	70-114		10-24		15-30	23-52	20-42			12-29	
High Range	115-140		25-30		31-45	53-64	43-55			30-40	
Abnormal	141+		31+		46+	65+	56+			41+	
Abnormal Trend (PPM Increase in 10 Hrs)											

Average Concentration Other Elements:

This Page Intentionally Left Blank

TYPE EQUIPMENT: **DIESEL ENGINE**

SYSTEM/USE: **SHIPS SERVICE GENERATOR**

EQUIPMENT MODEL: **HERCULES 6-DWXD**

	Fe	Ag	Al	Cr	Cu	Mg	Pb	Sn	Ni	Si	
Normal Range	0-34		0-5	0-4	0-14	0-22	0-11		0-2	0-11	
Marginal Range	35-65		6-13	5-9	15-30	23-52	12-29		3-5	12-29	
High Range	66-85		14-20	10-14	31-45	53-64	30-40		6-10	30-40	
Abnormal	86+		21+	15+	46+	65+	41+		11+	41+	
Abnormal Trend (PPM Increase in 10 Hrs)											

Average Concentration Other Elements:

This Page Intentionally Left Blank

TYPE EQUIPMENT: DIESEL ENGINE

SYSTEM/USE: SHIPS SERVICE GENERATOR

EQUIPMENT MODEL: RUSTON PAXMAN 8-RPHCZ

	Fe	Ag	Al	Cr	Cu	Mg	Pb	Sn	Ni	Si	
Normal Range	0-26		0-17	0-2	0-7	0-22	0-7	0-2		0-11	
Marginal Range	27-55		18-34	3-5	8-15	23-52	8-15	3-5		12-29	
High Range	56-72		35-48	6-10	16-25	53-64	16-25	6-10		30-40	
Abnormal	73+		49+	11+	26+	65+	26+	11+		41+	
Abnormal Trend (PPM Increase in 10 Hrs)											

Average Concentration Other Elements:

This Page Intentionally Left Blank

TYPE EQUIPMENT: DIESEL ENGINE

SYSTEM/USE: EMERGENCY GENERATOR

EQUIPMENT MODEL: ALCO 16-251B16

	Fe	Ag	Al	Cr	Cu	Mg	Pb	Sn	Ni	Si	
Normal Range	0-14	0-2	0-7	0-4	0-7	0-22	0-7		0-2	0-11	
Marginal Range	15-30	3-5	8-15	5-9	8-15	23-52	8-15		3-5	12-29	
High Range	31-45	6-10	16-25	10-14	16-25	53-64	16-25		6-10	30-40	
Abnormal	46+	11+	26+	15+	26+	65+	26+		11+	41+	
Abnormal Trend (PPM Increase in 10 Hrs)											

Average Concentration Other Elements:

This Page Intentionally Left Blank

TYPE EQUIPMENT: DIESEL ENGINE

SYSTEM/USE: EMERGENCY GENERATOR

EQUIPMENT MODEL: ALCO 8-251-E

	Fe	Ag	Al	Cr	Cu	Mg	Pb	Sn	Ni	Si
Normal Range	0-17		0-5	0-5	0-11	0-22	0-11			0-11
Marginal Range	8-34		6-13	6-13	12-29	23-52	12-29			12-29
High Range	35-48		14-20	14-20	30-40	53-64	30-40			30-40
Abnormal	49+		21+	21+	41+	65+	41+			41+
Abnormal Trend (PPM Increase in 10 Hrs)										

Average Concentration Other Elements:

This Page Intentionally Left Blank

TYPE EQUIPMENT: DIESEL ENGINE

SYSTEM/USE: EMERGENCY GENERATOR

EQUIPMENT MODEL: CUMMINS 6-NH220BI

	Fe	Ag	Al	Cr	Cu	Mg	Pb	Sn	Ni	Si
Normal Range	0-24		0-9	0-7	0-14	0-22	0-11			0-11
Marginal Range	25-54		10-24	8-15	15-30	23-52	12-29			12-29
High Range	55-68		25-30	16-25	31-45	53-64	30-40			30-40
Abnormal	69+		31+	26+	46+	65+	41+			41+
Abnormal Trend (PPM Increase in 10 Hrs)										

Average Concentration Other Elements:

This Page Intentionally Left Blank

TYPE EQUIPMENT: **DIESEL ENGINE**

SYSTEM/USE: **EMERGENCY GENERATOR**

EQUIPMENT MODEL: **DETROIT DIESEL (GM) 71637/300016V71/LC**

	Fe	Ag	Al	Cr	Cu	Mg	Pb	Sn	Ni	Si
Normal Range	0-29	0-2	0-9	0-4	0-9	0-22	0-5	0-2	0-2	0-11
Marginal Range	30-59	3-5	10-24	5-9	10-24	23-52	6-13	3-5	3-5	12-29
High Range	60-80	6-10	25-30	10-14	25-30	53-64	14-20	6-10	6-10	30-40
Abnormal	81+	11+	31+	15+	31+	65+	21+	11+	11+	41+
Abnormal Trend (PPM Increase in 10 Hrs)										

Average Concentration Other Elements:

This Page Intentionally Left Blank

TYPE EQUIPMENT: **DIESEL ENGINE**

SYSTEM/USE: **EMERGENCY GENERATOR**

EQUIPMENT MODEL: **DETROIT DIESEL (GM) 6-71RC7**

	Fe	Ag	Al	Cr	Cu	Mg	Pb	Sn	Ni	Si
Normal Range	0-24		0-2	0-4	0-9	0-22	0-14	0-2	0-2	0-11
Marginal Range	25-54		3-5	5-9	10-24	23-52	15-30	3-5	3-5	12-29
High Range	55-68		6-10	10-14	25-30	53-64	31-45	6-10	6-10	30-40
Abnormal	69+		11+	15+	31+	65+	46+	11+	11+	41+
Abnormal Trend (PPM Increase in 10 Hrs)										

Average Concentration Other Elements:

This Page Intentionally Left Blank

TYPE EQUIPMENT: **DIESEL ENGINE**

SYSTEM/USE: **EMERGENCY GENERATOR**

EQUIPMENT MODEL: **ELECTRO MOTIVE (GM) 3-268A**

	Fe	Ag	Al	Cr	Cu	Mg	Pb	Sn	Ni	Si
Normal Range	0-26		0-4	0-9	0-26	0-22	0-24		0-2	0-11
Marginal Range	27-55		5-9	10-24	27-55	23-52	25-54		3-5	12-29
High Range	56-72		10-14	25-30	56-72	53-64	55-68		6-10	30-40
Abnormal	73+		15+	31+	73+	65+	69+		11+	41+
Abnormal Trend (PPM Increase in 10 Hrs)										

Average Concentration Other Elements:

This Page Intentionally Left Blank

TYPE EQUIPMENT: DIESEL ENGINE

SYSTEM/USE: EMERGENCY GENERATOR

EQUIPMENT MODEL: FM (COLT) 10-38F5 1/4

	Fe	Ag	Al	Cr	Cu	Mg	Pb	Sn	Ni	Si
Normal Range	0-29		0-4	0-4	0-7	0-22	0-7		0-2	0-11
Marginal Range	30-59		5-9	5-9	8-15	23-52	8-15		3-5	12-29
High Range	60-80		10-14	10-14	16-25	53-64	16-25		6-10	30-40
Abnormal	81+		15+	15+	26+	65+	26+		11+	41+
Abnormal Trend (PPM Increase in 10 Hrs)										

Average Concentration Other Elements:

This Page Intentionally Left Blank

TYPE EQUIPMENT: DIESEL ENGINE

SYSTEM/USE: EMERGENCY GENERATOR

EQUIPMENT MODEL: FM (COLT) 6-38F5 1/4

	Fe	Ag	Al	Cr	Cu	Mg	Pb	Sn	Ni	Si
Normal Range	0-17		0-2	0-4	0-14	0-22	0-7	0-2	0-2	0-11
Marginal Range	18-34		3-5	5-9	15-30	23-52	8-15	3-5	3-5	2-29
High Range	35-48		6-10	10-14	31-45	53-64	16-25	6-10	6-10	30-40
Abnormal	49+		11+	15+	46+	65+	26+	11+	11+	41+
Abnormal Trend (PPM Increase in 10 Hrs)										

Average Concentration Other Elements:

This Page Intentionally Left Blank

TYPE EQUIPMENT: DIESEL ENGINE

SYSTEM/USE: EMERGENCY GENERATOR

EQUIPMENT MODEL: FM (COLT) 6-38ND8 1/8

	Fe	Ag	Al	Cr	Cu	Mg	Pb	Sn	Ni	Si
Normal Range	0-17		0-11	0-11	0-7	0-22	0-7		0-2	0-11
Marginal Range	18-34		12-29	12-29	8-15	23-52	8-15		3-5	12-29
High Range	35-48		30-40	30-40	16-25	53-64	16-25		6-10	30-40
Abnormal	49+		41+	41+	26+	65+	26+		11+	41+
Abnormal Trend (PPM Increase in 10 Hrs)										

Average Concentration Other Elements:

This Page Intentionally Left Blank

TYPE EQUIPMENT: **DIESEL ENGINE**

SYSTEM/USE: **EMERGENCY GENERATOR**

EQUIPMENT MODEL: **FM (COLT) 7-38F5 1/4**

	Fe	Ag	Al	Cr	Cu	Mg	Pb	Sn	Ni	Si	
Normal Range	0-17		0-2	0-4	0-14	0-22	0-9		0-2	0-11	
Marginal Range	18-34		3-5	5-9	15-30	23-52	10-24		3-5	12-29	
High Range	35-48		6-10	10-14	31-45	53-64	25-30		6-10	30-40	
Abnormal	49+		11+	15+	46+	65+	31+		11+	41+	
Abnormal Trend (PPM Increase in 10 Hrs)											

Average Concentration Other Elements:

This Page Intentionally Left Blank

TYPE EQUIPMENT: DIESEL ENGINE

SYSTEM/USE: EMERGENCY GENERATOR

EQUIPMENT MODEL: FM (COLT) 8-38D8 1/8 HISHOCK

	Fe	Ag	Al	Cr	Cu	Mg	Pb	Sn	Ni	Si
Normal Range	0-17		0-4	0-22	0-7	0-22	0-11		0-2	0-11
Marginal Range	18-34		5-9	23-52	8-15	23-52	12-29		3-5	12-29
High Range	35-48		10-14	53-64	16-25	53-64	30-40		6-10	30-40
Abnormal	49+		15+	65+	26+	65+	41+		11+	41+
Abnormal Trend (PPM Increase in 10 Hrs)										

Average Concentration Other Elements:

This Page Intentionally Left Blank

TYPE EQUIPMENT: DIESEL ENGINE

SYSTEM/USE: EMERGENCY GENERATOR

EQUIPMENT MODEL: GM 6-71

	Fe	Ag	Al	Cr	Cu	Mg	Pb	Sn	Ni	Si
Normal Range	0-24		0-2	0-4	0-9	0-22	0-14		0-2	0-11
Marginal Range	25-54		3-5	5-9	10-24	23-52	15-30		3-5	12-29
High Range	55-68		6-10	10-14	25-30	53-64	31-45		6-10	30-40
Abnormal	69+		11+	15+	31+	65+	46+		11+	41+
Abnormal Trend (PPM Increase in 10 Hrs)										

Average Concentration Other Elements:

This Page Intentionally Left Blank

TYPE EQUIPMENT: DIESEL ENGINE

SYSTEM/USE: EMERGENCY GENERATOR

EQUIPMENT MODEL: GM 12V71RC

	Fe	Ag	Al	Cr	Cu	Mg	Pb	Sn	Ni	Si
Normal Range	0-26		0-11		0-7	0-22	0-11			0-11
Marginal Range	27-55		12-29		8-15	23-52	12-29			12-29
High Range	56-72		30-40		16-25	53-64	30-40			30-40
Abnormal	73+		41+		26+	65+	41+			41+
Abnormal Trend (PPM Increase in 10 Hrs)										

Average Concentration Other Elements:

This Page Intentionally Left Blank

TYPE EQUIPMENT: **DIESEL ENGINE**

SYSTEM/USE: **EMERGENCY GENERATOR**

EQUIPMENT MODEL: **GM 16-645E5**

	Fe	Ag	Al	Cr	Cu	Mg	Pb	Sn	Ni	Si
Normal Range	0-26	0-2	0-2	04	0-26	0-22	0-11		0-2	0-11
Marginal Range	27-55	3-5	3-5	5-9	27-55	23-52	12-29		3-5	12-29
High Range	56-72	6-10	6-10	10-14	56-72	53-64	30-40		6-10	30-40
Abnormal	73+	11+	11+	15+	73+	65+	41+		11+	41+
Abnormal Trend (PPM Increase in 10 Hrs)										

Average Concentration Other Elements:

This Page Intentionally Left Blank

TYPE EQUIPMENT: **DIESEL ENGINE**

SYSTEM/USE: **EMERGENCY GENERATOR**

EQUIPMENT MODEL: **HERCULES 6-DFXD**

	Fe	Ag	Al	Cr	Cu	Mg	Pb	Sn	Ni	Si
Normal Range	0-49		0-9	0-4	0-26	0-22	0-17	0-2	0-2	0-11
Marginal Range	50-89		10-24	5-9	27-55	23-52	18-34	3-5	3-5	12-29
High Range	90-112		25-30	10-14	56-72	53-64	35-48	6-10	6-10	30-40
Abnormal	113+		13+	15+	73+	65+	49+	11+	11+	41+
Abnormal Trend (PPM Increase in 10 Hrs)										

Average Concentration Other Elements:

This Page Intentionally Left Blank

TYPE EQUIPMENT: **DIESEL ENGINE**

SYSTEM/USE: **EMERGENCY GENERATOR**

EQUIPMENT MODEL: **SUPERIOR GDB8**

	Fe	Ag	Al	Cr	Cu	Mg	Pb	Sn	Ni	Si
Normal Range	0-69		0-17		0-34	0-22	0-26			0-11
Marginal Range	70-114		18-34		35-65	23-52	27-55			12-29
High Range	115-140		35-48		66-85	53-64	56-72			30-40
Abnormal	141+		49+		86+	65+	73			41+
Abnormal Trend (PPM Increase in 10 Hrs)										

Average Concentration Other Elements:

This Page Intentionally Left Blank

TYPE EQUIPMENT: GEARS

SYSTEM/USE: REDUCTION GEARS

EQUIPMENT MODEL: FARRELL

	Fe	Ag	Al	Cr	Cu	Mg	Pb	Sn	Ni	Si
Normal Range	0-9	0-2	0-2	0-2	0-14	0-22	0-7	0-2	0-2	0-11
Marginal Range	10-24	3-5	3-5	3-5	15-30	23-52	8-15	3-5	3-5	12-29
High Range	25-30	6-10	6-10	6-10	31-45	53-64	16-25	6-10	6-10	30-40
Abnormal	31+	11+	11+	11+	46+	65+	226+	11+	11+	41+
Abnormal Trend (PPM Increase in 10 Hrs)										

Average Concentration Other Elements:

This Page Intentionally Left Blank

TYPE EQUIPMENT: GEARS

SYSTEM/USE: REDUCTION GEARS

EQUIPMENT MODEL: G.E.

	Fe	Ag	Al	Cr	Cu	Mg	Pb	Sn	Ni	Si
Normal Range	0-11	0-2	0-2	0-2	0-17	0-22	0-11	0-2	0-2	0-11
Marginal Range	12-29	3-5	3-5	3-5	18-34	23-52	12-29	3-5	3-5	12-29
High Range	30-40	6-10	6-10	6-10	35-48	53-64	30-40	6-10	6-10	30-40
Abnormal	41+	11+	11+	11+	49+	65+	41+	11+	11+	41+
Abnormal Trend (PPM Increase in 10 Hrs)										

Average Concentration Other Elements:

This Page Intentionally Left Blank

TYPE EQUIPMENT: **GEARS**

SYSTEM/USE: **REDUCTION GEARS**

EQUIPMENT MODEL: **WESTERN GEAR**

	Fe	Ag	Al	Cr	Cu	Mg	Pb	Sn	Ni	Si
Normal Range	0-14	0-2	0-2	0-2	0-9	0-22	0-11	0-2	0-2	0-11
Marginal Range	15-30	3-5	3-5	3-5	10-24	23-52	12-29	3-5	3-5	12-29
High Range	31-45	6-10	6-10	6-10	25-30	53-64	30-40	6-10	6-10	30-40
Abnormal	46+	11+	11+	11+	31+	65+	41+	11+	11+	41+
Abnormal Trend (PPM Increase in 10 Hrs)										

Average Concentration Other Elements:

This Page Intentionally Left Blank

TYPE EQUIPMENT: GEARS

SYSTEM/USE: REDUCTION GEARS

EQUIPMENT MODEL: WESTINGHOUSE

	Fe	Ag	Al	Cr	Cu	Mg	Pb	Sn	Ni	Si
Normal Range	0-7	0-2	0-4	0-2	0-22	0-22	0-11	0-2	0-2	0-11
Marginal Range	8-15	3-5	5-9	3-5	23-52	23-52	12-29	3-5	3-5	12-29
High Range	16-25	6-10	10-14	6-10	53-64	53-64	30-40	6-10	6-10	30-40
Abnormal	26+	11+	15+	11+	65+	65+	41+	11+	11+	41+
Abnormal Trend (PPM Increase in 10 Hrs)										

Average Concentration Other Elements:

This Page Intentionally Left Blank

TYPE EQUIPMENT: GEARS

SYSTEM/USE: TRANSMISSION

EQUIPMENT MODEL: WESTERN GEAR 1100

	Fe	Ag	Al	Cr	Cu	Mg	Pb	Sn	Ni	Si
Normal Range	0-44		0-5		0-26	0-22				0-11
Marginal Range	45-82		6-13		27-55	23-52				12-29
High Range	83-105		14-20		56-72	53-64				30-40
Abnormal	106+		21+		73+	65+				41+
Abnormal Trend (PPM Increase in 10 Hrs)										

Average Concentration Other Elements:

This Page Intentionally Left Blank

TYPE EQUIPMENT: AIR COMPRESSOR

SYSTEM/USE: STARTING

EQUIPMENT MODEL: SAC FOR DETROIT DIESEL (GM) 16V-149 TI

	Fe	Ag	Al	Cr	Cu	Mg	Pb	Sn	Ni	Si
Normal Range	0-9			0-5						0-5
Marginal Range	10-24			6-13						6-13
High Range	25-30			14-20						14-20
Abnormal	31+			21+						21+
Abnormal Trend (PPM Increase in 10 Hrs)										

Average Concentration Other Elements:

This Page Intentionally Left Blank

TYPE EQUIPMENT: **AIR COMPRESSOR**

SYSTEM/USE: **HIGH PRESSURE**

EQUIPMENT MODEL: **INGERSOLL RAND**

	Fe	Ag	Al	Cr	Cu	Mg	Pb	Sn	Ni	Si	Ti
Normal Range	0-4		0-2	0-2	0-11	0-2	0-54	0-2	0-2	0-2	0-2
Marginal Range	5-9		3-5	3-5	12-29	3-5	55-94	3-5	3-5	3-5	3-5
High Range	10-14		6-10	6-10	30-40	6-10	95-118	6-10	6-10	6-10	6-10
Abnormal	15+		11+	11+	41+	11+	119+	11+	11+	11+	11+
Abnormal Trend (PPM Increase in 10 Hrs)											

Average Concentration Other Elements:

This Page Intentionally Left Blank

TYPE EQUIPMENT: **AIR COMPRESSOR**

SYSTEM/USE: **HIGH PRESSURE**

EQUIPMENT MODEL: **WORTHINGTON**

	Fe	Ag	Al	Cr	Cu	Mg	Pb	Sn	Ni	Si	Ti
Normal Range	0-24	0-2	0-2	0-2	0-9	0-2	0-4	0-4	0-2	0-2	0-2
Marginal Range	25-54	3-5	3-5	3-5	10-24	3-5	5-9	5-9	3-5	3-5	3-5
High Range	55-68	6-10	6-10	6-10	25-30	6-10	10-14	10-14	6-10	6-10	6-10
Abnormal	69+	11+	11+	11+	31+	11+	15+	15+	11+	11+	11+
Abnormal Trend (PPM Increase in 10 Hrs)											

Average Concentration Other Elements:

This Page Intentionally Left Blank

TYPE EQUIPMENT: AIR COMPRESSOR

SYSTEM/USE: INTERMEDIATE AND LOW PRESSURE

EQUIPMENT MODEL: INGERSOLL RAND NS100NL

	Fe	Ag	Al	Cr	Cu	Mg	Pb	Sn	Ni	Si
Normal Range	0-2	0-2	0-2	0-2	0-7	0-22	0-14	0-2	0-2	0-11
Marginal Range	3-5	3-5	3-5	3-5	8-15	23-52	15-30	3-5	3-5	12-29
High Range	6-10	6-10	6-10	6-10	16-25	53-64	31-45	6-10	6-10	30-40
Abnormal	11+	11+	11+	11+	26+	65+	46+	11+	11+	41+
Abnormal Trend (PPM Increase in 10 Hrs)										

Average Concentration Other Elements:

This Page Intentionally Left Blank

TYPE EQUIPMENT: AIR CONDITIONING COMPRESSOR

SYSTEM/USE: CHILLED WATER

EQUIPMENT MODEL: R12

	Fe	Ag	Al	Cr	Cu	Mg	Pb	Sn	Ni	Si
Normal Range						0-22				0-11
Marginal Range						23-52				12-29
High Range						53-64				30-40
Abnormal						65+				41+
Abnormal Trend (PPM Increase in 10 Hrs)										

Average Concentration Other Elements:

This Page Intentionally Left Blank

TYPE EQUIPMENT: AIR CONDITIONING COMPRESSOR

SYSTEM/USE: CHILLED WATER

EQUIPMENT MODEL: R11

	Fe	Ag	Al	Cr	Cu	Mg	Pb	Sn	Ni	Si	Ti
Normal Range	0-654	0-2	0-11	0-2	0-654	0-5	0-2	0-4	0-26	0-2	0-2
Marginal Range	655-699	3-5	12-29	3-5	655-699	6-13	3-5	5-9	27-55	3-5	3-5
High Range	700-725	6-10	30-40	6-10	700-725	14-20	6-10	10-14	56-72	6-10	6-10
Abnormal	726+	11+	41+	11+	726+	21+	11+	15+	73+	11+	11+
Abnormal Trend (PPM Increase in 10 Hrs)											

Average Concentration Other Elements:

This Page Intentionally Left Blank

TYPE EQUIPMENT: **AIR CONDITIONING COMPRESSOR**

SYSTEM/USE: **CHILLED WATER**

EQUIPMENT MODEL: **R114**

	Fe	Ag	Al	Cr	Cu	Mg	Pb	Sn	Ni	Si	Ti
Normal Range	0-2		0-2	0-2	0-9	0-2	0-2	0-2	0-2	0-2	0-2
Marginal Range	3-5		3-5	3-5	10-24	3-5	3-5	3-5	3-5	3-5	3-5
High Range	6-10		6-10	6-10	25-30	6-10	6-10	6-10	6-10	6-10	6-10
Abnormal	11+		11+	11+	31+	11+	11+	11+	11+	11+	11+
Abnormal Trend (PPM Increase in 10 Hrs)											

Average Concentration Other Elements:

This Page Intentionally Left Blank

TYPE EQUIPMENT: **REFRIGERATION SYSTEMS**

SYSTEM/USE: **DIRECT EXPANSION**

EQUIPMENT MODEL: **R12**

	Fe	Ag	Al	Cr	Cu	Mg	Pb	Sn	Ni	Si
Normal Range	0-11		0-2	0-2	0-17	0-22	0-2	0-7	0-2	0-11
Marginal Range	12-29		3-5	3-5	18-34	23-52	3-5	8-15	3-5	12-29
High Range	30-40		6-10	6-10	35-48	53-64	6-10	16-25	6-10	30-40
Abnormal	41+		11+	11+	49+	65+	11+	26+	11+	41+
Abnormal Trend (PPM Increase in 10 Hrs)										

Average Concentration Other Elements:

This Page Intentionally Left Blank

TYPE EQUIPMENT: **BEARINGS**

SYSTEM/USE: **LINE SHAFT**

EQUIPMENT MODEL: **SPRING BEARING**

	Fe	Ag	Al	Cr	Cu	Mg	Pb	Sn	Ni	Si
Normal Range						0-22				0-11
Marginal Range						23-52				12-29
High Range						53-64				30-40
Abnormal						65+				41+
Abnormal Trend (PPM Increase in 10 Hrs)										

Average Concentration Other Elements:

This Page Intentionally Left Blank

TYPE EQUIPMENT: **AIR SUPPLY SYSTEM**

SYSTEM/USE: **FORCED DRAFT BLOWER**

EQUIPMENT MODEL: **HARDY TYNES**

	Fe	Ag	Al	Cr	Cu	Mg	Pb	Sn	Ni	Si
Normal Range	0-2	0-2	0-2	0-2	0-5	0-22	0-11	0-2	0-2	0-11
Marginal Range	3-5	3-5	3-5	3-5	6-13	23-52	12-29	3-5	3-5	12-29
High Range	6-10	6-10	6-10	6-10	14-20	53-64	30-40	6-10	6-10	30-40
Abnormal	11+	11+	11+	11+	21+	65+	41+	11+	11+	41+
Abnormal Trend (PPM Increase in 10 Hrs)										

Average Concentration Other Elements:

This Page Intentionally Left Blank

TYPE EQUIPMENT: **AIR SUPPLY SYSTEM**

SYSTEM/USE: **FORCED DRAFT BLOWER**

EQUIPMENT MODEL: **WESTINGHOUSE**

	Fe	Ag	Al	Cr	Cu	Mg	Pb	Sn	Ni	Si
Normal Range	0-7	0-2	0-2	0-2	0-5	0-22	0-11	0-2	0-2	0-11
Marginal Range	8-15	3-5	3-5	3-5	6-13	23-52	12-29	3-5	3-5	12-29
High Range	16-25	6-10	6-10	6-10	14-20	53-64	30-40	6-10	6-10	30-40
Abnormal	26+	11+	11+	11+	21+	65+	41+	11+	11+	41+
Abnormal Trend (PPM Increase in 10 Hrs)										

Average Concentration Other Elements:

This Page Intentionally Left Blank

SYSTEM: Anchor Windlass (Hydraulic) **Lubricant: MIL-PRF-17672 (2110TH)**

	Fe	Ag	Al	Cr	Cu	Si	Sn	Ni	Pb	Mo	Mg
Range											
Normal Range											
Marginal Range											
High Range											
Abnormal											
Abnormal Trend (PPM Increase in 10hrs)											

FOR INFORMATIONAL PURPOSES ONLY

This work package is a place-holder awaiting information to be provided by NAVSEA.

This Page Intentionally Left Blank

SYSTEM: Anchor Windlass (Hydraulic) **MIL-PRF-17672 (2135TH)**

	Fe	Ag	Al	Cr	Cu	Si	Sn	Ni	Pb	Mo	Mg
Range											
Normal Range											
Marginal Range											
High Range											
Abnormal											
Abnormal Trend (PPM Increase in 10hrs)											

FOR INFORMATIONAL PURPOSES ONLY

This work package is a place-holder awaiting information to be provided by NAVSEA.

This Page Intentionally Left Blank

SYSTEM: Ballast (Hydraulic) **MIL-PRF-17672 (2075/2110, 2135)**

	Fe	Ag	Al	Cr	Cu	Si	Sn	Ni	Pb	Mo	Mg
Range											
Normal Range											
Marginal Range											
High Range											
Abnormal											
Abnormal Trend (PPM Increase in 10hrs)											

FOR INFORMATIONAL PURPOSES ONLY

This work package is a place-holder awaiting information to be provided by NAVSEA.

This Page Intentionally Left Blank

SYSTEM: Capstan (Hydraulic) **MIL-PRF-17672**

	Fe	Ag	Al	Cr	Cu	Si	Sn	Ni	Pb	Mo	Mg
Range											
Normal Range											
Marginal Range											
High Range											
Abnormal											
Abnormal Trend (PPM Increase in 10hrs)											

FOR INFORMATIONAL PURPOSES ONLY

This work package is a place-holder awaiting information to be provided by NAVSEA.

This Page Intentionally Left Blank

SYSTEM: Central Hydraulics **MIL-PRF-17672**

	Fe	Ag	Al	Cr	Cu	Si	Sn	Ni	Pb	Mo	Mg
Range											
Normal Range											
Marginal Range											
High Range											
Abnormal											
Abnormal Trend (PPM Increase in 10hrs)											

FOR INFORMATIONAL PURPOSES ONLY

This work package is a place-holder awaiting information to be provided by NAVSEA.

This Page Intentionally Left Blank

SYSTEM: CPP/CRP Hydraulics **MIL-PRF-17331 (2190 TEP)**

	Fe	Ag	Al	Cr	Cu	Si	Sn	Ni	Pb	Mo	Mg
Range											
Normal Range											
Marginal Range											
High Range											
Abnormal											
Abnormal Trend (PPM Increase in 10hrs)											

FOR INFORMATIONAL PURPOSES ONLY

This work package is a place-holder awaiting information to be provided by NAVSEA.

This Page Intentionally Left Blank

SYSTEM: CPP/CRP Hydraulics **MIL-PRF-9000 (MS 9250)**

	Fe	Ag	Al	Cr	Cu	Si	Sn	Ni	Pb	Mo	Mg
Range											
Normal Range											
Marginal Range											
High Range											
Abnormal											
Abnormal Trend (PPM Increase in 10hrs)											

FOR INFORMATIONAL PURPOSES ONLY

This work package is a place-holder awaiting information to be provided by NAVSEA.

This Page Intentionally Left Blank

SYSTEM: Crane (Hydraulic) **MIL-PRF-17672 (2135TH)**

	Fe	Ag	Al	Cr	Cu	Si	Sn	Ni	Pb	Mo	Mg
Range											
Normal Range											
Marginal Range											
High Range											
Abnormal											
Abnormal Trend (PPM Increase in 10hrs)											

FOR INFORMATIONAL PURPOSES ONLY

This work package is a place-holder awaiting information to be provided by NAVSEA.

This Page Intentionally Left Blank

SYSTEM: Crane (Hydraulic) **MIL-DTL-17111**

	Fe	Ag	Al	Cr	Cu	Si	Sn	Ni	Pb	Mo	Mg
Range											
Normal Range											
Marginal Range											
High Range											
Abnormal											
Abnormal Trend (PPM Increase in 10hrs)											

FOR INFORMATIONAL PURPOSES ONLY

This work package is a place-holder awaiting information to be provided by NAVSEA.

This Page Intentionally Left Blank

SYSTEM: Elevator (Hydraulic) **MIL-PRF-17672 (2135TH)**

	Fe	Ag	Al	Cr	Cu	Si	Sn	Ni	Pb	Mo	Mg
Range											
Normal Range											
Marginal Range											
High Range											
Abnormal											
Abnormal Trend (PPM Increase in 10hrs)											

FOR INFORMATIONAL PURPOSES ONLY

This work package is a place-holder awaiting information to be provided by NAVSEA.

This Page Intentionally Left Blank

SYSTEM: Elevator (Hydraulic) **MIL-PRF-19457**

	Fe	Ag	Al	Cr	Cu	Si	Sn	Ni	Pb	Mo	Mg
Range											
Normal Range											
Marginal Range											
High Range											
Abnormal											
Abnormal Trend (PPM Increase in 10hrs)											

FOR INFORMATIONAL PURPOSES ONLY

This work package is a place-holder awaiting information to be provided by NAVSEA.

This Page Intentionally Left Blank

SYSTEM: Steering Gear (Hydraulic) **MIL-PRF-17672 (2135TH)**

	Fe	Ag	Al	Cr	Cu	Si	Sn	Ni	Pb	Mo	Mg
Range											
Normal Range											
Marginal Range											
High Range											
Abnormal											
Abnormal Trend (PPM Increase in 10hrs)											

FOR INFORMATIONAL PURPOSES ONLY

This work package is a place-holder awaiting information to be provided by NAVSEA.

This Page Intentionally Left Blank

SYSTEM: Stern Gate (Hydraulic) **MIL-PRF-17672 (2110TH)**

	Fe	Ag	Al	Cr	Cu	Si	Sn	Ni	Pb	Mo	Mg
Range											
Normal Range											
Marginal Range											
High Range											
Abnormal											
Abnormal Trend (PPM Increase in 10hrs)											

FOR INFORMATIONAL PURPOSES ONLY

This work package is a place-holder awaiting information to be provided by NAVSEA.

This Page Intentionally Left Blank