T.O. 1-1B-50

TECHNICAL MANUAL

BASIC TECHNICAL ORDER
FOR
USAF AIRCRAFT

WEIGHT AND BALANCE

PREPARED BY 557 ACSS/GFEAC

THIS REVISION SUPERSEDES T.O. 1-1B-50, DATED 1 MARCH 2005.

DISTRIBUTION STATEMENT A: Approved for public release; distribution unlimited

PA Case Number _50013_. Submit recommended changes or problems with the Technical Order to 557 ACSS/GFEAC, 3001 Staff Dr., Ste. 2AH1 100A, Tinker Air Force Base, OK, 73145–3022.

Published Under Authority of the Secretary of the Air Force

1 APRIL 2008

LIST OF EFFECTIVE PAGES

INSERT LATEST CHANGED PAGES. DESTROY SUPERSEDED PAGES.

NOTE: The portion of the text affected by the changes is indicated by a vertical line in the outer margins of the page. Changes to illustrations are indicated by miniature pointing hands. Changes to wiring diagrams are indicated by shaded areas.

Dates of issue for original and changed pages are:

Original . . . . . 0 . . . . . 1 April 2008

TOTAL NUMBER OF PAGES IN THIS PUBLICATION IS 98 CONSISTING OF THE FOLLOWING:

PAGE NO.	*CHANGE NO.	PAGE NO.	*CHANGE NO.	PAGE NO.	*CHANGE NO.
Title	0				
A	0				
i - iv	0				
1-1 – 1-3	0				
1-4 Blank	0				
2-1 – 2-2	0				
3-1 – 3-4	0				
4-1 – 4-6	0				
5-1 – 5-12	0				
6-1 – 6-12	0				
7-1 – 7-5	0				
7-6 Blank	0				
8-1 – 8-2	0				
9-1 – 9-3	0				
9-4 Blank	0				
10-1 – 10-4	0				
11-1 – 11-6	0				
A-1 – A-6	0				
B-1 – B-24	0				

* Zero in this column indicates an original page.

TABLE OF CONTENTS

Section	Title	Page
I	**INTRODUCTION**	**1-1**
1-1.	Purpose	1-1
1-2.	Scope	1-1
1-3.	Terminology	1-1
1-4.	Related References	1-1
1-5.	Weight and Balance Control.	1-1
1-6.	Web Page.	1-3
1-7.	Comments.	1-3
II	**WEIGHT**	**2-1**
2-1.	General.	2-1
2-2.	Weight Terminology.	2-1
2-3.	Weight Limits.	2-1
2-4.	Aircraft Weight.	2-1
2-5.	Floor Loading.	2-1
III	**BALANCE**	**3-1**
3-1.	Purpose.	3-1
3-2.	Terminology.	3-1
3-3.	Discussion.	3-1
3-4.	Calculating Aircraft CG.	3-1
3-5.	Fuselage Station.	3-2
3-6.	Percent MAC (Mean Aerodynamic Chord).	3-2
3-7.	Loading/Unloading.	3-3
3-8.	Ballast.	3-3
IV	**WEIGHT AND BALANCE SYSTEM**	**4-1**
4-1.	General.	4-1
4-2.	Aeronautical Systems Center (ASC) Responsibilities.	4-1
4-3.	Air Logistics Center (ALC) Responsibilities.	4-1
4-4.	Air Education and Training Command (AETC) Responsibilities.	4-1
4-5.	Command Responsibilities.	4-1
4-6.	Aircraft Weight and Balance Classes.	4-2
4-7.	USAF Aircraft Weight and Balance Classifications.	4-2
4-8.	Weight and Balance Handbooks.	4-2
4-9.	Weight and Balance Flight Clearance.	4-4
4-10.	Aircraft Weighing Requirements.	4-6
V	**INSTRUCTIONS FOR USE OF MANUAL WEIGHT AND BALANCE CHARTS AND FORMS**	**5-1**
5-1.	DD Form 365; Record of Weight and Balance Personnel.	5-1
5-2.	DD Form 365-1; Chart A – Basic Weight Checklist Record.	5-1
5-3.	DD Form 365-2; Form B – Aircraft Weighing Record.	5-3
5-4.	DD Form 365-3; Chart C – Basic Weight and Balance Record.	5-5

TABLE OF CONTENTS

Section *Title* *Page*

5-5. Chart E Loading Data. 5-6
5-6. DD Form 365-4; Weight and Balance Clearance Form F 5-6
5-7. Locally Generated Forms 5-12

VI WEIGHING AIRCRAFT 6-1
6-1. General. 6-1
6-2. Weighing Equipment. 6-1
6-3. Weighing Accessories. 6-2
6-4. Weighing Procedures. 6-5
6-5. Aircraft Leveling. 6-10
6-6. Dimensions Required for CG Location. 6-11
6-7. Projection of Points to the Floor. 6-12
6-8. Taking Measurements. 6-12
6-9. Recording Weight and Dimensions. 6-12
6-10. Verification of Weighing Results. 6-12

VII CENTER OF GRAVITY (CG) LOADING CALCULATIONS 7-1
7-1. Purpose. 7-1
7-2. Lateral CG and Vertical CG. 7-1
7-3. Loading Principles. 7-1
7-4. Chart E Loading Data. 7-1
7-5. Most Forward and Most Aft CG Calculations. 7-1
7-6. Sample 7-3

VIII AUTOMATED WEIGHT AND BALANCE SYSTEM (AWBS) 8–1
8-1. Purpose. 8–1
8-2. Introduction. 8–1
8-3. Basic Concepts. 8–1
8-4. System Requirements. 8–1
8-5. Installation Procedures. 8–2
8-6. Version Compatibility. 8–2
8-7. General Guidelines. 8–2
8-8. Distribution of the AWBS. 8–2

TABLE OF CONTENTS

Section *Title* *Page*

IX FORM F WEIGHT AND BALANCE COMPUTERS (FORM F GENERATORS) 9-1
9-1. Purpose. 9-1
9-2. Authority for Use. 9-1
9-3. Objective. 9-1
9-4. Calculations. 9-1
9-5. Program Changes. 9-1
9-6. Ease of Operation. 9-1
9-7. Computational Requirements. 9-1
9-8. Accuracy. 9-3
9-9. Instruction Book. 9-3
9-10. Computer. 9-3

X LOAD ADJUSTER 10-1
10-1. Purpose. 10-1
10-2. Description. 10-1
10-3. Loading Ranges. 10-2
10-4. Load Adjuster Index. 10-2
10-5. Chart E Scales (Loading Scales). 10-3
10-6. Using the Loading Scales. 10-4
10-7. Accuracy. 10-4

XI VECTOR DIAGRAM 11-1
11-1. Purpose. 11-1
11-2. Description. 11-1
11-3. Diagram Construction. 11-1
11-4. Diagram Use. 11-1
11-5. Vector Diagram Construction. 11-4

APPENDIX

A DEFINITIONS A-1

B SAMPLE CHARTS AND FORMS B-1

LIST OF ILLUSTRATIONS

Figure *Title* *Page*

2-1. Weight Terminology 2-2
3-1. Calculating Aircraft CG 3-2
3-2. Balance Arm Fuselage Station 3-3
3-3. Percent MAC 3-4
5-1. DD Form 365-2; Form B - Aircraft Weighing Record 5-4
6-1. Electronic Weighing Kit and Accessory Weighing Kit 6-1
6-2. Load Cell Arrangement 6-2
6-3. Portable Platform Aircraft Scales 6-3
6-4. Stationary Pit Type Scales 6-4
6-5. Reading a Hydrometer 6-4
6-6. Accessory Weighing Kit 6-5
6-7. Calculation of As Weighed Weight 6-7
6-8. Electronic Weighing Kit with Axle Jacks 6-9
6-9. Leveling Lugs Inside Aircraft 6-11
6-10. Leveling Lugs Outside Aircraft 6-11
6-11. Plumb Bob Leveling 6-11
9-1. Computer Generated Form F 9-2
10-1. Load Adjuster 10-1
11-1. Vector Diagram 11-3
11-2. Vector Diagram Construction 11-5
B-1. Sample DD Form 365-1 . . . . . B-2
B-2. Sample DD Form 365-1 (Chart A) B-3
B-3. Sample DD Form 365-2 (Form B) B-4
B-4. Sample DD Form 365-3 (Chart C) B-6
B-5. Sample F–1X Chart E B-7
B-6. Sample DD Form 365-4 Form F (Tactical) B-13
B-7. Sample DD Form 365-2 (Form B) B-14
B-8. Sample AWBS Record of Weight and Balance Personnel B-16
B-9. Sample AWBS Chart A B-17
B-10. Sample AWBS Form B B-18
B-11. Sample AWBS Chart C B-20
B-12. Sample AWBS Form F B-21
B-13. Sample AWBS Form B B-22

SECTION I
INTRODUCTION

1–1. PURPOSE This TO outlines and defines the requirements, procedures, and responsibilities for weight and balance control of USAF aircraft. This TO also provides information and instructions for accomplishing the charts and forms that provide the means for continuous record and control of aircraft weight and balance. Information and explanation of principles, terms, and definitions are presented to provide weight and balance personnel with a general information manual pertinent to their particular function. The general requirements of this TO and the specific requirements of the -5 and -6 series TOs govern USAF aircraft weight and balance documentation and control.

1–2. SCOPE. The use of this TO is mandatory for all Air Force, Air Force Reserve, Air National Guard, and any other activities that operate and/or maintain USAF aircraft (includes airplanes, rotocraft, Unmanned Air Vehicles (UAVs)). The general requirements and procedures of this TO are applicable to weight and balance control of all USAF aircraft. Additional requirements and/or procedural instructions for specific aircraft weight and balance control are specified in the aircraft -5 series TO.

1–3. TERMINOLOGY. Usage of the words shall, will, should and may is in accordance with the following:

1–3.1. The words shall and will are used to indicate the requirements, procedures, and/or responsibilities are mandatory.

1–3.2. The word should is used to indicate a non–mandatory but preferred method of accomplishment.

1–3.3. The word may is used to indicate an acceptable or suggested means of accomplishment.

1–3.4. Weight and balance definitions are found in APPENDIX A.

1–3.5. Whenever TO 1–1B–50 or –50 is referred to, it is used to include TO 1–1B–50CD–1 (the CD media) and TO 1–1B–50WA–1 (the electronic web site media).

1–4. RELATED REFERENCES. Weight and balance personnel shall be familiar with the following related technical manuals (supplementary data to this TO) and other related documents:

1–4.1. Aircraft –5 Series TO: Sample Basic Weight Checklists and Loading Data.

1–4.2. Aircraft –6 Series TO: Scheduled Inspection and Maintenance Requirements.

1–4.3. Aircraft –9 Series TO: Cargo Loading Manual.

1–4.4. TO 35B2 Series: Aircraft Handling and Weighing Equipment.

1–4.5. TO 00–5–1: AF Technical Order System.

1–4.6. AFMAN 37–139: Disposition of Air Force Documentation.

1–4.7. AFI 21 Series: Maintenance Management.

1–4.8. AFI 11–215: Flight Manuals Program.

1–4.9. TO 33K Series: Technical Manual for Scale Calibration.

1–5. WEIGHT AND BALANCE CONTROL. Operational aircraft weight and balance control shall be accomplished in accordance with the detailed requirements and instruction of the specific aircraft -5 series TO and the requirements of this TO. In case of conflicting requirements, procedures, or instructions, the aircraft -5 series TO shall take precedence over this TO pending resolution of the conflict.

1–5.1. WEIGHT AND BALANCE EFFECTS. Flight characteristics of aircraft and aircraft performance are directly dependent upon their weight and balance conditions. An aircraft whose weight is greater than its allowable maximum gross weight, or whose cg is located outside its prescribed cg limits, may experience one or more of the following unsatisfactory flight characteristics, performance degradations or payload reduction:

- Longitudinal instability.
- Lateral instability.

- Increase in takeoff distance.
- Increase in takeoff speed.
- Increase in landing ground run.
- Increase in control forces.
- Increase in stall speeds.
- Decrease in range.
- Decrease in rate of climb.
- Decrease in service ceiling.
- Decrease in structural safety factors.

Using the principles and following the instructions contained in this TO can prevent these flight conditions and associated accidents.

1–5.2. WEIGHT AND BALANCE HANDBOOK. The weight and balance handbook shall be maintained in accordance with Section IV requirements.

NOTE

The weight and balance handbook shall take the highest security classification of the data contained therein.

1–5.2.1. WEIGHT AND BALANCE CHARTS AND FORMS. The standard system of weight and balance control requires the use of several different charts and forms. APPENDIX B illustrates samples of these charts and forms. Detailed instructions for use of the following referenced charts and forms are contained in Section V.

1–5.2.1.1. DD FORM 365; RECORD OF WEIGHT AND BALANCE PERSONNEL. This form is used to provide a continuous record of weight and balance personnel responsible for maintaining the aircraft weight and balance handbook and preparation of DD Form 365–4.

1–5.2.1.2. DD FORM 365–1; CHART A – BASIC WEIGHT CHECKLIST RECORD. The basic weight checklist record is a completed collection of DD Forms 365–1 for a particular aircraft, referred to as Chart A. It is a list of basic weight equipment and other items, by aircraft compartment, which is, or may be, installed on the aircraft.

1–5.2.1.3. DD FORM 365–2; FORM B – AIRCRAFT WEIGHING RECORD. This form is used to record data obtained from the actual aircraft weighing.

1–5.2.1.4. DD FORM 365–3; CHART C – BASIC WEIGHT AND BALANCE RECORD. This record is a continuous series of completed DD Forms 365–3. It is a continuous and permanent record of aircraft weight, moment, and cg position.

1–5.2.1.5. DD FORM 365–4; FORM F – WEIGHT AND BALANCE CLEARANCE FORM. This form records the weight, moment or index, and cg calculations for a specific loading arrangement on a specific aircraft to ensure the aircraft remains within its weight and balance limitations.

1–5.2.1.6. CHART E LOADING DATA. This refers to the loading data section of the aircraft –5 series TO. It contains the information necessary to perform aircraft loading control (weight and balance flight clearance computations) and to accomplish actual weighing.

1–5.2.2. PURPOSE OF CHARTS AND FORMS. The data to be entered on the charts and forms contained in the weight and balance handbook are applicable only to the individual aircraft identified by Model/Design/Series (MDS) and Serial Number as documented on the title page and various charts and forms. The standard system of operational level weight and balance control can be divided into two parts, each of which requires the use of several different charts and forms. The first part of operational weight and balance control concerns the requirements for current and correct information regarding the aircraft's basic weight, moment/index, and cg location. An aircraft's basic weight and cg are documented through utilization of Charts A and C and Form B. This current information may be the result of an actual aircraft inventory and weighing, or it may stem from a series of careful calculations. The second part of operational weight and balance control concerns maintaining the aircraft's gross weight and cg within limits with the loading and expenditure of various items. This part is determined and controlled through the use of the Form F with the aid of the –5 series TO CHART E LOADING DATA or LOAD ADJUSTER. Throughout the completion and utilization of Charts A and C and Forms B and F, all weight and moment data shall be listed to the nearest whole number and arms and indexes to one decimal place unless otherwise presented in the aircraft -5 series TO. The forms prescribed in this TO shall be requisitioned through normal distribution channels or procured locally if electronic forms are available. Data sheets from the Automated Weight and Balance System (AWBS) may be used in lieu of the DD Form 365, DD Form 365–1, DD Form 365–2, DD Form 365–3, and DD Form 365–4. Data sheets from computerized Form F generators may be used provided these sheets contain, as a minimum, the necessary weight and balance data as defined by the DD 365 series forms, -5 series TO, and this TO.

NOTE

The forms or computer generated replicas shall be maintained in accordance with the instructions contained herein.

An example is given in APPENDIX B, which represents the proper completion and use of these charts and forms. When forms are revised (either the DD Form 365 series or the computer generated forms), forms in use in the handbook do not have to be replaced with the revised forms. When new forms are required then the latest version of the form will be used.

1–5.2.3. RESPONSIBILITIES. The aircraft manufacturer inserts all identifying data on the title page of the weight and balance handbook and completes all other applicable charts prior to delivery of the aircraft. Qualified weight and balance personnel in accordance with the requirements of this TO shall accomplish all subsequent changes in weight and balance charts and forms.

1–5.2.4. DOCUMENTATION AND DISPOSITION. The disposition of weight and balance documentation shall be as follows:

RECORD OF WEIGHT AND BALANCE PERSONNEL Destroy after loss of aircraft.

BASIC WEIGHT CHECKLIST RECORD (CHART A) Destroy when superseded or loss of aircraft.

AIRCRAFT WEIGHING RECORD (Form B) Destroy after loss of aircraft.

BASIC WEIGHT AND BALANCE RECORD (CHART C) Destroy after loss of aircraft.

WEIGHT AND BALANCE CLEARANCE FORM F

Prepared for each mission. Destroy on completion of mission.

CANNED FORM F. Destroy when superseded.

Related to an aircraft involved in an accident. Destroy 1 year after completion of investigation.

The above is in accordance with AFMAN 37–139, DISPOSITION OF AIR FORCE DOCUMENTATION.

1–6. WEB PAGE. A web page has been developed to share ideas, problems and solutions within the weight and balance community. The page has an AWBS, weight and balance topics of interest, and a comment section. The secure web page may be found at:
https://afkm.wpafb.af.mil/ASPs/CoP/EntryCoP.asp?Filter=OO-EN-AS-11.
An additional public web site may be found at:
http://engineering.wpafb.af.mil/weight/weight.asp.
Articles, hints and items to share with other weight and balance individuals are welcome and may be submitted to ASC/ENFS, address below. T.O. 1-1B-50WA-1 may be found at: https://137.240.78.49/til/tild/tildt–home.html
Secure access at T.O. 1-1B-50 may be found at: https://137.240.78.49/til/tild/11b50.pdf.
A public access site is:
http://www.tinker.af.mil/shared/media/document/AFD-061214-031.pdf.

1–7. COMMENTS. Errors, omissions, or recommendations relative to this TO or the DD 365 series forms shall be reported on AFTO Form 22 in accordance with T.O. 00-5-1. The OPR for the -50 TO is 557ACSS/GFEAC, Tinker AFB, OK 73145-3022. Changes or questions regarding this TO, or the AWBS, may be forwarded to ASC/ENFS, 2530 Loop Road West, Wright-Patterson AFB, OH 45433-7101 or by electronic mail to the web site above, or to irving.schaff, using the first.last@wpafb.af.mil format. Prior to incorporating changes into the TO, a draft copy will be sent to MAJCOM W&B POCs. This will provide opportunity to see the 1-1B-50 with proposed changes included, and offer feedback prior to the change being issued. POC's will be given 30 working days to provide feedback to the OPR at 557 ACSS/GFEAC.

Errors, omissions, or recommendations regarding aircraft -5 series TOs, or any phase of the Flight Manual Program, shall be reported on AF Form 847 and forwarded through your Command Headquarters in accordance with the processing instructions of AFI 11-215.

SECTION II
WEIGHT

2–1. GENERAL. One of the basic elements of aircraft design is weight. The weight of an aircraft is used in determining such design criteria as engine requirements, wing area, landing gear requirements, and payload capacity. Any weight changes, whether in manufacturing, modification, or maintenance, can have distinct effects on aircraft performance and/or payload capability.

2–2. WEIGHT TERMINOLOGY. Figure 2–1 illustrates the meaning of Air Force aircraft weight terminology. For related definitions, see APPENDIX A and the aircraft -5 series TO.

2–3. WEIGHT LIMITS. All aircraft are designed with a number of weight limits. These limits are determined by performance, control, and structural restrictions. Exceeding these limits can result in loss of the aircraft and are expressly forbidden.

2–4. AIRCRAFT WEIGHT. The weight of an aircraft is determined through a combination of actual weighing, accurate record keeping, and proper use of the aircraft -5 series TO.

2–5. FLOOR LOADING. Floor loading is the weight, in pounds, of a load divided by the area of floor on which it rests. The aircraft -5 and -9 series TOs usually specify the floor loading limits and/or weight limits for the various aircraft compartments.

NOTE

The floor loading limits of an aircraft shall never be exceeded.

WEIGHT EMPTY

+

Guns, unusable fuel, oil, ballast, survival kits, oxygen, and any other internal or external equipment not disposed of during flight and not listed in Chart E.

–

Any Chart A items which are missing from the aircraft.

=

BASIC WEIGHT

+

Crew, crew baggage, steward equipment, emergency equipment, special mission fixed equipment, and all other non–expendable items (such as fixed pylons and racks) not in basic weight.

=

OPERATING WEIGHT

+

Payload items; such as cargo, ammunition, passengers, stores, disposable fuel tanks, and transfer fuel.

=

ZERO FUEL WEIGHT

+

Usable Fuel

=

TAKEOFF GROSS WEIGHT

–

Load items expended in flight; such as fuel, stores, ammunition, cargo, and paratroops.

=

LANDING GROSS WEIGHT

Figure 2–1. Weight Terminology

SECTION III
BALANCE

3–1. PURPOSE. This section describes the basic principles of weight, arm, and moment in aircraft balance. The use of these principles is discussed in Section VII. The use of load adjuster indexes is discussed in Section X.

3–2. TERMINOLOGY. The terms balance, arm, balance arm, moment, simplified moment, load adjuster index, and cg are fundamental to understanding aircraft balance and control. These, and other terms used in this section, are defined in APPENDIX A.

3–3. DISCUSSION. An aircraft is said to be in balance, or balanced, when all weight items in, on, or of the aircraft are distributed so that the longitudinal cg of the aircraft lies within a predetermined cg range. This range is defined by the most forward and aft permissible cg locations, which are called the forward and aft cg limits, respectively. To determine if an aircraft is balanced, the aircraft cg must be calculated and compared to the forward and aft cg limits for that particular configuration and gross weight. Only longitudinal balance is discussed in this TO, since few aircraft require vertical and/or lateral balance control. For those aircraft that do, the –5 series TO calls out the required additional balance control.

3–4. CALCULATING AIRCRAFT CG. The cg of a group of items, such as a loaded aircraft, can be calculated when the items' weights and arms are known. This can be done by using moments. An example of this process is given in Figure 3–1.

3–4.1. First, record the aircraft's basic weight and moment from the Chart C. The Chart C basic moment is a simplified moment and must be multiplied by the given constant.

3–4.2. Determine the moments of the load items, either by multiplying the individual weights by their arms, or by recording them out of the Chart E loading data.

NOTE

- The longitudinal reference datum on some aircraft is not located forward of, but within, the aircraft. Thus, if negative arms are encountered with added (positive) weight, the moments are negative, i.e., 10 lbs x –10 in = –100 in–lbs.
- If negative arms are encountered with deleted (negative) weights, the moment is positive, i.e., –15 in x –15 lbs = +225 in–lbs.
- If positive arms are encountered with added (positive) weights, the moments are positive, i.e., 25 in x 50 lbs = +1250 in–lbs.
- If positive arms are encountered with deleted (negative) weights, the moments are negative, i.e., +25 in x –50 lbs = –1250 in–lbs.
- The addition or deletion of an item at the reference datum contributes no moment change, i.e., 100 lbs x 0 in = 0 in–lbs. See figure 3–1 for an illustration of this note.

3–4.3. Next, add the weights of the items and the basic weight and add the moments of the items and the basic moment.

3–4.4. By dividing the moment sum by the weight sum, the balance arm, or cg, of the loaded aircraft is calculated.

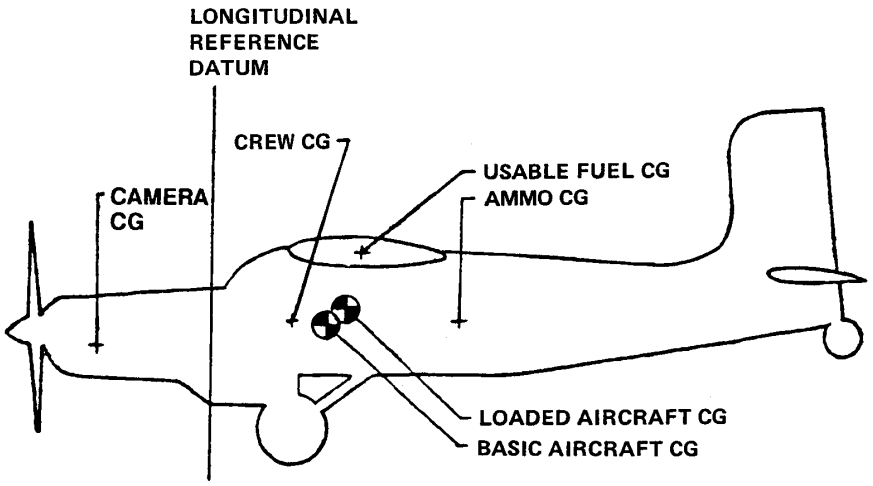

	Weight (lbs)		Arm(in)		Moment(in-lbs)
Basic Weight	3,596				212,989
Camera	12	x	-64.8	=	-778
Crew	200	x	42.1	=	8,420
Usable Fuel	900	x	73.4	=	66,060
Ammo	340	x	122.2	=	41,548
	5,048				328,239

Total Moment ÷ Total Weight = Balance Arm

328,239 in-lbs ÷ 5,048 lbs = 65.0 in

Figure 3–1. Calculating Aircraft CG

3–5. FUSELAGE STATION. Fuselage Station (FS) is often equal at each point to the balance arm scale. However, if the aircraft fuselage is shortened or lengthened, the original fuselage sections usually retain their old FS designations. Such changes most often occur in the design or production phase, before the aircraft becomes operational. This alters the FS–balance arm relationship (see figure 3–2).

NOTE

Balance calculations are not to be worked using FS locations; use only balance arms. The FS location is not always equal to the balance arm.

3–6. PERCENT MAC (MEAN AERODYNAMIC CHORD). The location of the aircraft cg is commonly expressed not by its balance arm, but by percent MAC. Percent MAC identifies a location with respect to the position of the MAC; 0.0 percent at the leading edge of the MAC and 100.0 percent at the trailing edge. For definition, see APPENDIX A. For weight and balance purposes, percent MAC is found by a simple mathematical conversion equation or tables, particular to the aircraft, and listed in the Chart E (see figure 3–3).

3–7. LOADING/UNLOADING. The loading or unloading of items can have a considerable effect on aircraft balance, even when the items total less than one tenth of one percent of the aircraft weight. Balance loading principles and the techniques for determining the balance of various aircraft configurations are discussed in Section VII.

3–8. BALLAST. Sometimes design, manufacturing, or maintenance changes cause the aircraft cg to exceed its limits. This is usually corrected by the addition of permanent ballast which always remains in the aircraft. When the ballast is added to counter the temporary removal of an item or to balance a particular configuration, it is called temporary ballast. For a definition of ballast, see APPENDIX A. An equation for use in determining the amount of temporary ballast is included in Section VII.

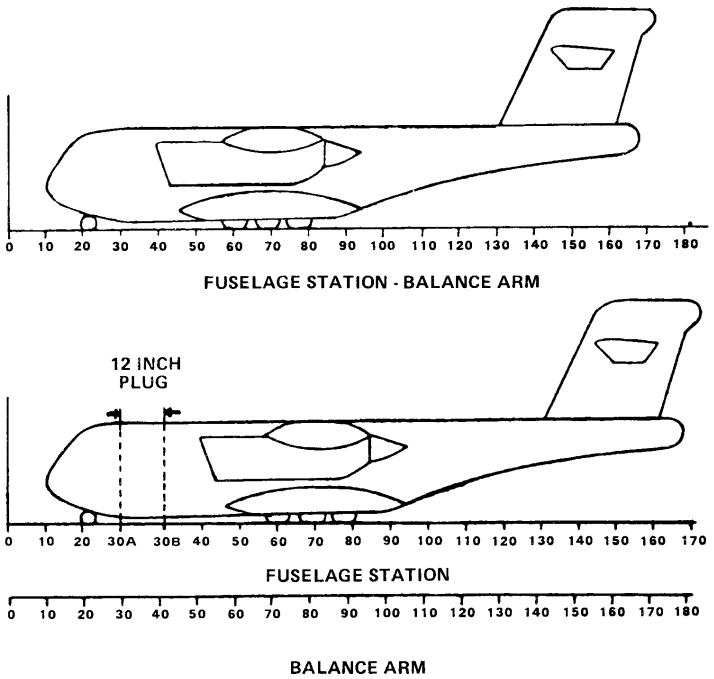

Figure 3–2. Balance Arm Fuselage Station

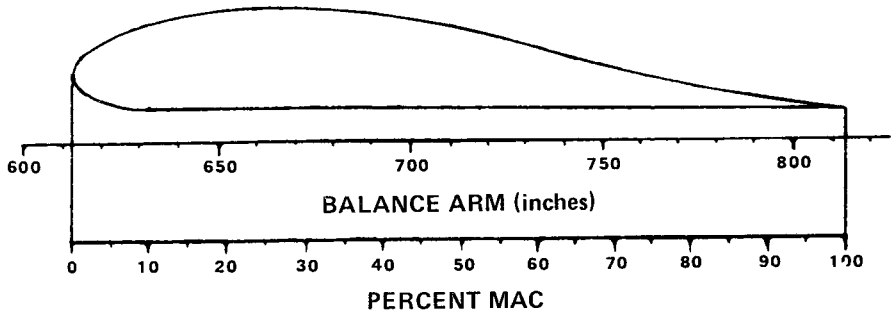

$$\text{Percent MAC} = \frac{(\text{Balance Arm} - \text{LEMAC})}{\text{MAC}} \times 100$$

LEMAC = 611.10 inches
MAC = 200.87 inches

$$\text{Percent MAC} = \frac{(\text{Balance Arm} - 611.10)}{200.87} \times 100$$

Figure 3–3. Percent MAC

SECTION IV
WEIGHT AND BALANCE SYSTEM

4–1. GENERAL. This section defines the requirements, procedures, and Command responsibilities relative to the USAF aircraft weight and balance control system. The overall objectives of the system are to provide current and correct information regarding aircraft basic weight and moment, and to maintain aircraft gross weight and cg within permissible limits. All commands are responsible to assure that all personnel assigned weight and balance responsibility on USAF aircraft are qualified by paragraph 4.5.2. Unique requirements of UAVs weighing less then 3000 lbs. allow for a deviation from this TO when they are routinely weighed and balanced every time the vehicle is reconfigured. These small UAVs are not required to maintain weight and balance handbooks in accordance with this TO. However, an approved weight and balance system using forms and charts to calculate and record weight and balance data that meet the objectives of this paragraph must be utilized

4–2. AERONAUTICAL SYSTEMS CENTER (ASC) RESPONSIBILITIES. The Aeronautical Systems Center (ASC) of the Air Force Materiel Command (AFMC) shall maintain overall responsibility for establishing the requirements, procedures, forms format, and AWBS for USAF aircraft weight and balance control. ASC/ENFS is the office of primary responsibility for the following duties:

4–2.1. Establishing the technical content and format of this TO, and the DD 365 series forms.

4–2.2. Approval review for technical content and format of aircraft –5 series TOs for which ASC has technical responsibility.

4–2.3. Approval review of AFTO Forms 22 and AF Forms 847 relative to documentation for which ASC has technical responsibility.

4–2.4. Determination and specification of USAF aircraft weight and balance classifications.

4–2.5. Development of specialized weight and balance engineering services that may be requested by Air Logistics Centers (ALCs).

4–2.6. Coordination and recommendation to Air Education and Training Command (AETC) of changes in the USAF aircraft weight and balance control system that may necessitate revising the training curriculum of weight and balance courses.

4–2.7. Coordination and recommendation of procedures and/or equipment required for compliance with the various requirements of the weight and balance control system.

4–2.8. Establish weighing intervals for aircraft whose engineering responsibility is within ASC.

4–2.9. Acts as the Technical OPR for the AWBS.

4–3. AIR LOGISTICS CENTER (ALC) RESPONSIBILITIES. The ALCs of AFMC shall prepare, procure, and disseminate aircraft weight and balance data that Commands require to comply with USAF aircraft weight and balance control system requirements. ALC shall also provide and/or coordinate with ASC technical assistance for unusual weight and balance problems as requested by commands. ALC shall establish weighing intervals for aircraft not included in paragraph 4.2.8.

4–4. AIR EDUCATION AND TRAINING COMMAND (AETC) RESPONSIBILITIES. AETC shall prepare and provide weight and balance instruction and training required for using unit compliance with USAF aircraft weight and balance control system.

4–5. COMMAND RESPONSIBILITIES. Commands shall establish effective operating procedures for weight and balance control of aircraft assigned to their command to ensure:

4–5.1. The weight and balance control system requirements and procedures of this TO, and related TO documentation, are in accordance with the management procedures of AFI 21–101. When necessary, the Commands may impose more stringent requirements for weight and balance control through Command supplements to applicable Air Force manuals and instructions. The weight and balance control system requirements and procedures shall include, but not necessarily be limited to:

4–5.1.1. The updating of records to the current weight and balance status for all assigned aircraft.

4–5.1.2. The development of methods for aircraft loading that are satisfactory for safety of flight.

4–5.1.3. The proper utilization of modification weight and balance data.

4–5.1.4. The proper completion of the Form F as required.

4–5.1.5. Assisting flight crews in proper weight and balance maintenance.

4–5.2. Military and civilian personnel assigned the responsibility for accomplishing the various weight and balance functions (weight and balance technicians) are qualified (1) by graduating from an AETC approved course of instruction and (2) by the weight and balance authority (as determined by the command) who will certify that the weight and balance individual has completed the training and maintains their proficiency. The approved course of instruction requires successfully completing (1) J6ANU2A000–001 (Computer Based Training) Aircraft Weight and Balance Course and (2) J3AZR2A000–000 Weight and Balance Practical Course (or ASC/ENFS approved alternative mobile course). The weight and balance authority may waive the J3AZR2A000–000 Weight and Balance Practical Course for individuals who are trained by a current weight and balance qualified technician and certified by the weight and balance authority. Individuals who have previously completed a formal AETC approved weight and balance course prior to implementation of the above courses have fulfilled the training requirement. The weight and balance authority must ensure the weight and balance technician is proficient in accomplishing weight and balance tasks on their assigned aircraft.

NOTE

- Civilian contractor qualifications shall be verified by the contracting authority. Contracting authorities may approve equivalent training that fulfills the intent of the above paragraph.
- Exceptions to this requirement must be approved by ASC/ENFS through the affected MAJCOM.
- Weight and balance personnel that do not have the responsibility to weigh aircraft are not required to complete the J3AZR2A000–000 Weight and Balance Practical Course, but will complete a MAJCOM approved AWBS familiarization course. AWBS training will be documented in the individuals training records or in an approved Maintenance Information System. The weight and balance authority will ensure the weight and balance technician is proficient in accomplishing weight and balance documentation requirements on their assigned aircraft. These weight and balance personnel are NOT authorized to weigh aircraft.

4–5.3. Equipment is available, maintained, and/or certified as required for compliance with the applicable weight and balance directives.

4–5.4. The using unit may implement procedures to simplify aircraft weight and balance maintenance which do not conflict with the aircraft –5 series TO, this TO, or other applicable directives.

4–5.5. It is the responsibility of the weight and balance technician to determine the proper amounts of ballast required to maintain the aircraft within the prescribed cg limits throughout its flight.

4–6. AIRCRAFT WEIGHT AND BALANCE CLASSES.

For weight and balance control purposes, USAF aircraft are divided into the following classifications:

4–6.1. Class 1. Class 1 aircraft are those which require basic weight and moment record documentation but do not require loading control for normal configurations. Normal configurations are defined as configurations previously flown which cannot exceed weight, structural, and/or cg limits.

4–6.2. Class 2. Class 2 aircraft are those which require basic weight and moment record documentation and loading control, to ensure that loading arrangements employed do not exceed permissible weight, structural, and/or cg limits. Loading control is accomplished in accordance with the instructions and data of the aircraft –5 or –9 series TO, and this TO.

4–7. USAF AIRCRAFT WEIGHT AND BALANCE CLASSIFICATIONS.

All aircraft, except those listed below, shall be considered Class 2. Aircraft of similar model designation shall take on the same weight and balance classification as the basic aircraft unless specifically designated otherwise. Only the following may be considered Class 1 aircraft:

T–3A Series
T–34 Series
T–37 Series (Not the A–37 series)
T–38 Series
T–41 Series
T–46 Series

4–8. WEIGHT AND BALANCE HANDBOOKS.

An aircraft weight and balance handbook provides for the continuous record of the weight and balance of a particular aircraft. There are two types of weight and balance handbooks; a primary handbook (which is required for each aircraft), and an optional supplemental handbook (which is an abbreviated version of the primary handbook).

NOTE

A weight and balance handbook is required for all active aircraft. Inactive aircraft (flyable temporary storage, static display, ground training, aircraft battle damage repair, etc.) do not require current and up–to–date weight and balance handbooks. If these inactive aircraft become active, the weight and balance handbook must be updated with an actual weighing prior to first flight. If the weight and balance handbook is not available, it must be initiated in accordance with paragraph 4–8.5.

4–8.1. HANDBOOK LOCATION. Class 1 aircraft weight and balance handbooks shall be stored in a location as determined by the commands. Class 2 aircraft primary weight and balance handbooks for non–fighter aircraft (reference paragraph 4–7) shall be stored on the aircraft when the aircraft is in flight, or as determined by the command if a supplemental handbook is maintained for storage on the aircraft. Class 2 primary weight and balance handbooks for fighter aircraft will be stored as determined by the commands.

4–8.2. PRIMARY HANDBOOKS. A primary weight and balance handbook shall be maintained for each assigned active aircraft by qualified weight and balance personnel. The handbook charts, forms, and, when required, the aircraft –5 series TO shall be maintained in accordance with requirements and instructions of this TO, TO 00–5–1 and AFMAN 37–139. Non–current copies of the charts and forms may be filed for historical purposes and shall be available whenever requested by the depot. These historical charts and forms shall be transferred with the aircraft whenever the aircraft is transferred. The contents of the primary weight and balance handbook shall be arranged and maintained in the following order:

4–8.2.1. Locally developed cover page containing at least the MDS and Serial Number.

4–8.2.2. DD FORM 365; RECORD OF WEIGHT AND BALANCE PERSONNEL.

4–8.2.3. DD FORM 365–1; CHART A – BASIC WEIGHT CHECKLIST RECORD.

4–8.2.4. DD FORM 365–2; B – AIRCRAFT WEIGHING RECORD.

4–8.2.5. DD FORM 365–3; CHART C – BASIC WEIGHT AND BALANCE RECORD. If desired, only the Chart C since the last weighing need be maintained in this TO.

4–8.2.6. Applicable aircraft –5 series TO, unless there is supplemental weight and balance handbook or the primary weight and balance handbook is permanently stored in a central location not on board the aircraft. In the above cases, an aircraft –5 series TO is not required with each primary handbook. One copy (minimum) of the aircraft –5 series TO which covers a group of similar aircraft shall be maintained, for reference purposes.

NOTE

If the –5 series TO is in the form of multiple TOs, only the Loading Data TOs need to be included. The Sample Basic Weight Checklist does not have to be included. If desired, the –5 may be maintained with each primary handbook.

4–8.2.7. If desired, DD FORM 365–4; FORM F – WEIGHT AND BALANCE CLEARANCE FORM may be maintained or stored in the weight and balance handbook. This is advisable whenever someone other than the normal weight and balance authority may be completing a Form F for this aircraft, such as when the aircraft is going to depot.

4–8.2.8. If desired, obtain a copy of the aircraft AWBS data disk and place in a suitable holder.

NOTE

Having a copy of the AWBS data disk in the handbook does not relieve the requirements of paragraph 4–8.2.1 through 4–8.2.7.

4–8.3. SUPPLEMENTAL HANDBOOKS. Using Commands that maintain primary weight and balance handbooks in a central location shall assemble and maintain supplemental handbooks for storage on all Class 2 non–fighter aircraft. The maintenance of these supplemental handbooks shall be the responsibility of the individual assigned the responsibility for the primary handbook. As a minimum, supplemental handbooks shall include:

4–8.3.1. A statement identifying the qualified person responsible for maintaining the handbooks, their duty station, office symbol, and phone number. This statement shall also note that changes to the aircraft basic weight and/or moment must be coordinated with the individual assigned responsibility for handbook maintenance.

EXAMPLE:

John Q. Doe, XXX BWG/ AMQ, Best AFB, DSN XXX–XXXX is responsible for maintenance and update of the primary and supplemental weight and balance handbooks for aircraft Serial Number XX–XXX as authorized by TO 1–1B–50, Section IV. All changes affecting the basic weight and/or moment of this aircraft shall be coordinated with him.

4–8.3.2. A certified copy of the current (last page) DD Form 365–3, the AWBS substitute or locally generated form to provide the current aircraft basic weight, basic moment or index, and cg location.

4–8.3.3. The applicable aircraft –5 series TO.

NOTE

If the –5 series TO is in the form of multiple TOs, only the Loading Data TOs need to be included. The Sample Basic Weight Checklist does not have to be included.

4–8.3.4. If desired, DD Form 365–4; FORM F –WEIGHT AND BALANCE CLEARANCE FORM may be maintained or stored in the supplemental weight and balance handbook.

4–8.4. HANDBOOK SECURITY CLASSIFICATION. Aircraft weight and balance handbooks shall be classified in accordance with the highest security classification of the data contained therein.

4–8.5. HANDBOOK REPLACEMENT. In the event an aircraft's primary weight and balance handbook or pages becomes lost, is damaged, or for any reason needs to be replaced, the individual assigned responsibility for that aircraft handbook shall assemble a new handbook as follows:

4–8.5.1. Obtain a new cover page containing at least the MDS and Serial Number.

4–8.5.2. Obtain and complete a DD Form 365.

4–8.5.3. Obtain sufficient copies of DD Form 365–1 and use the applicable aircraft –5 series TO to prepare a new Chart A.

4–8.5.4. Inventory the aircraft.

4–8.5.5. Obtain DD Form 365–2 and weigh the aircraft in accordance with applicable directives, then complete the DD Form 365–2.

4–8.5.6. Obtain DD Form 365–3 and complete with initial entry from the DD Form 365–2. Include a note identifying the reason for assembling a new handbook.

4–8.5.7. Obtain the applicable aircraft –5 series TO as required.

4–8.5.8. Obtain and prepare DD Form 365–4; FORM F – WEIGHT AND BALANCE CLEARANCE FORM.

NOTE

If sufficient data is available to accurately reflect the aircraft's lost or damaged weight and balance data pages, as in the case of worn or water damaged pages or the AWBS, accomplish items 4–8.5.1 through 4–8.5.8 above as deemed necessary by the weight and balance authority. If there is not sufficient data to accurately duplicate the aircraft's lost or damaged pages or document, but sufficient data is available to assess the true weight and balance of the aircraft, only a note to the affect that the historical records cannot be duplicated, but the current weight and balance data is correct is all that is necessary.

4–8.5.9. If desired, obtain a new copy of the aircraft AWBS data disk and place in a suitable holder.

4–8.6. AUTHORIZED SUBSTITUTE FORMS. Data sheets from the AWBS may be used in lieu of the DD Form 365–1, DD Form 365–2, DD Form 365–3, and DD Form 365–4. Data sheets from computerized Form F generators may be used provided these sheets contain as a minimum, the necessary weight and balance data as defined by the DD 365 series forms, –5 series TO, and this TO.

4–8.7. ENTRY ERRORS ON FORMS. If errors are found on the forms in the weight and balance handbooks, do not erase or change the entry. Line out the erroneous entry and correct the entry. Make a note in the Chart C pertaining to the corrections.

4–9. WEIGHT AND BALANCE FLIGHT CLEARANCE. Weight and balance flight clearance is accomplished to ensure that aircraft remain within safe weight and balance limits during takeoff, flight, and landing. Such clearance is recorded through the use of DD Form 365–4, FORM F – WEIGHT AND BALANCE CLEARANCE FORM, or through an authorized substitute. The original copy of the Form F, when properly signed and filed in accordance with established operational procedures, serves as the record to certify that weight and balance was properly accomplished.

4–9.1. REQUIRED CLEARANCE. Class 2 aircraft require weight and balance clearance prior to each flight. Class 1 aircraft do not require weight and balance flight clearance for normal configurations, but do require flight clearance for all configurations not previously flown.

4–9.2. FORM F MAINTENANCE PROCEDURES. All Forms F shall be completed in accordance with the instructions of this TO. Forms F are utilized on a ONE TIME USE basis, or are CANNED for multiple use.

4–9.2.1. ONE TIME USE Form F – These are Forms F prepared for use on a one time basis and are destroyed upon mission completion. They are generally used when the Command does not utilize a CANNED Form F approach or when an aircraft is loaded in a manner for which no CANNED Form F is on file.

4–9.2.2. CANNED Form F – These are Forms F which are prepared for multiple use when an aircraft's basic weight and moment remain within certain specified tolerances. They are filed in accordance with established Command procedures, for future reference and use. CANNED Form F shall be checked at least every 180 days for accuracy and a new Form F prepared as required. New CANNED Form F shall be prepared whenever Chart C basic weight and/or moment changes accumulate to the threshold specified in the aircraft –5 series TO, or to the general requirements for Chart C threshold as specified in this TO. If no changes are required, the Form F may be re–dated and initialed, or a letter issued to state the review has been accomplished to certify its currency.

4–9.3. STANDARDIZED LOADINGS. At the option of the Weight and Balance Authority and when missions permit, the use of standardized aircraft loadings (usually for fighter/ attack/ trainer/rotary–wing aircraft), CANNED Forms F may be utilized with the following procedures to accomplish weight and balance flight clearance:

4–9.3.1. The weight and balance handbooks for Class 2 aircraft of the same MDS shall be examined to determine which aircraft have the:

a. Most forward basic weight cg location,

b. the heaviest basic weight,

c. and most aft basic weight cg location.

These aircraft shall then be used as the baselines for calculation of aircraft weight and balance clearance. Additional aircraft may be used if desired or necessary for calculations of the aircraft weight and balance clearance.

4–9.3.2. These baseline aircraft shall be used to compute Forms F to reflect carriage of the standardized load configurations on each aircraft. The standardized loadings for which all aircraft remain within safe weight and balance limits for takeoff, flight, and landing may then be CANNED. These CANNED Forms F shall be used for the weight and balance flight clearance of the remaining aircraft of the same MDS.

4–9.3.3. For actual weight and balance clearance, these CANNED Forms F shall be referenced for record purposes.

4–9.3.4. Aircraft basic weight and cg location is constantly changing through the incorporation of TCTOs, engine and equipment changes, modifications, and repairs. Therefore, the weight and balance handbooks for all aircraft involved in these standard loading procedures shall be closely monitored. Aircraft basic weight and cg location must remain within the weight, most forward cg and most aft cg positions of the reference baseline aircraft.

4–9.4. CLEARANCE PROCEDURE. When filing DD Form 175, Military Flight Plan (or authorized substitute), pilots shall either attach the original copy of a ONE TIME USE DD Form 365–4 or note that a previously filed CANNED DD Form 365–4 is applicable. Duplicate copies of DD Form 365–4 shall be filed in accordance with Command operational procedures (attached to flight plan or given to controlling ground agency, quality assurance, transient alert, maintenance, etc.). One of the following entries shall be made in the appropriate space on DD Form 175:

4–9.4.1. N/A – For Class 1 aircraft since weight and balance clearance is not required.

4–9.4.2. ATTACHED – When a ONE TIME USE DD Form 365–4 is attached.

4–9.4.3. FILED AT DATE – when citing a previously filed CANNED DD Form 365–4.

4–9.5. AUTHORIZED SUBSTITUTIONS FOR DD FORM 365–4. The following substitutes are authorized for use as weight and balance clearance records in lieu of DD Form 365–4.

4–9.5.1. Electronic Computer data sheets may be used in lieu of the DD Form 365–4 provided these sheets contain, as a minimum, the necessary weight and balance data as defined by the –5 series TO to show load computations, gross weight and cg. The date, aircraft serial number, and signatures of responsible personnel must be documented on the sheet. The sheet does not have to resemble the style or format of the actual DD Form 365–4.

4–9.5.2. The designated commercial type loading schedule for C–9 aircraft.

4–9.5.3. Computer programs that only produce the DD 365–4 forms must follow the requirements in Section IX of this TO.

4–10. AIRCRAFT WEIGHING REQUIREMENTS. Aircraft shall be weighed when any of the following conditions exist:

4–10.1. When weighing requirements are specified in the applicable aircraft –5 or –6 series TO. Aircraft that are not in compliance with such weighing requirements shall not be flown without prior depot permission.

4–10.2. When TCTOs, modifications, or repairs are accomplished and calculated or actual weight and moment data are not available.

NOTE

Aircraft weight and balance can be drastically changed by painting. If an aircraft is completely painted (many aircraft –5 series TOs have more restrictive requirements) and the responsible engineering organization has not evaluated and provided the weight and balance impact for the work accomplished, the aircraft must be weighed.

4–10.3. When recorded weight and balance data is suspected of being in error.

4–10.4. When unsatisfactory flight characteristics are reported by the pilot which cannot be traced to flight control system malfunction, improper aircraft loading, or error in weight and balance data and/or computations.

4–10.5. Whenever inactive aircraft become active (Reference paragraph 4.8).

4–10.6. When the weight and balance handbook needs replacement (Reference paragraph 4.8.5.).

SECTION V
INSTRUCTIONS FOR USE OF MANUAL WEIGHT AND BALANCE CHARTS AND FORMS

5–1. DD FORM 365; RECORD OF WEIGHT AND BALANCE PERSONNEL. This form provides a continuous record of weight and balance personnel (civilian or military) responsible for the correctness and maintenance of the weight and balance handbook. It lists the name, grade/rate/rank, where and when qualified, duty station, date became responsible for maintaining the weight and balance manual, and date responsibility was relieved. Other qualified personnel may make entries in the weight and balance handbook if they have been designated to do so by the individual currently assigned responsibility for the handbook. All entries must be completed and either typed or clearly written in ink. The last line entry shall indicate, in accordance with AFI 21 series, the person who is currently responsible for maintaining the weight and balance handbook.

5–2. DD FORM 365–1; CHART A – BASIC WEIGHT CHECKLIST RECORD.

5–2.1. This form lists all equipment and other items that are or may be installed, and for which provisions or fixed stowage has been made in a definite location in the aircraft. All items weighing two pounds or more shall be listed for aircraft whose initial basic weight is under 25,000 pounds. All items weighing five pounds or more shall be listed for all other aircraft. Items, equipment or line replaceable units that may be inventoried, necessary to define basic weight or required to document removed weight and cg should constitute the inputs to this chart. Examples of components are: avionics boxes, power supply items (batteries, generators, inverters, etc.) engines, propellers, fluids (unusable fuel, hydraulic oil, etc.) crew safety and comfort items (life raft, seats, emergency equipment, etc.), personnel and cargo equipment (armor plate, etc.), armament (guns, cameras, countermeasure equipment, etc.), and personnel and cargo equipment (litters and supports, ramp, toes, hoists, tables, lavatory and galley equipment, etc.). The specific aircraft –5 series TO will supply examples of equipment that should be on this chart. The weight, arm, and moment or simplified moment of the individual items must be listed for use in correcting the aircraft basic weight and moment on the Chart C (DD Form 365-3) as changes are made in these items. All entries shall be typed or clearly written in ink unless specified otherwise in this TO. When check marks and zeros are entered in the IN AIRCRAFT column and IN/OUT dates are entered in the item column, the Chart A serves as the inventory of equipment and other items included in the basic weight of the aircraft. When a check mark is entered in CHART C ENTRY column, the check mark is an indication that an entry has been made in the Chart C as a result of a change in the status (in or out of the aircraft) of an item since the last inventory.

5–2.2. At the discretion of the losing/gaining weight and balance authority, the Chart A may be checked by an aircraft inventory whenever the AFI 21–103 possession changes and the weight and balance authority changes.

NOTE

When an aircraft goes to depot, the possession of the aircraft is usually changed, but the weight and balance authority is not necessarily transferred. The authority is transferred whenever the receiving organization's weight and balance authority places their signature on the DD 365 for that aircraft. The receiving authority is not required to put their signature on the DD 365 solely because he makes entries to the Chart C or completes a Form F. But, if he weighs or inventories the aircraft, the authority shall be transferred. If changes are made to the aircraft in which the weight of the aircraft is affected, and the weight or balance change is unknown or questionable, the aircraft must be weighed and the authority transferred.

5–2.3. The Chart A shall be checked by an aircraft inventory and/or updated whenever:

5–2.3.1. The aircraft has a major overhaul.

5–2.3.2. It is required by a TCTO.

5–2.3.3. Changes in equipment included in the basic weight are made for a different type of operation or mission.

5–2.3.4. The pilot reports unsatisfactory flight characteristics with weight and/or balance implications.

5–2.3.5. The aircraft is weighed.

5–2.4. The Chart A is completed and used as follows:

5–2.4.1. At the time of delivery, the manufacturer inserts the designation of the AIRCRAFT MODEL (MDS) and serial number in the spaces provided at the top of the Chart A.

5–2.4.2. Each Chart A item shall be assigned an alphanumeric symbol. These symbols shall indicate the alphabetical designation of the compartment; for example, items A–1, then A–2, then A–3 and so on listed for compartment A. These item numbers shall be listed in the column titled COMPARTMENT AND ITEM NUMBER.

5–2.4.3. The alphabetical and descriptive designations of each aircraft compartment (in capital letters, such as A–NOSE) shall be shown in the ITEMS AND LOCATION column at the top of each compartment's equipment list. The compartment designation shall be underlined and separated from the equipment list by one blank line. The dimensional limits of each compartment shall be stated in terms of inches from the reference datum, such as A–NOSE (5–64 inches) and B–PILOTS (64–104 inches), and shall agree with those compartment limits shown in the CHART E LOADING DATA. Compartment equipment lists documented in the ITEMS AND LOCATION column shall present individual operating equipment items by description and part number (such as, Preamplifier – APR–25/AM2348). The description and part number presented in this column shall be common with that shown on the equipment item identification plate. Equipment within each compartment should be listed such that the arms (in the column titled ARM) progress numerically from the forward to the aft limit of the compartment. If a compartment is divided into an upper and a lower section, all items within one section should be listed before continuing to the next section.

5–2.4.4. The weight, arm, and moment of each item shall be listed in the appropriate columns. A constant may be used to simplify the moment. If a constant is used, it will be listed at the top of the MOMENT column.

5–2.4.5. The manufacturer of the aircraft places check marks or zeros in the first IN AIRCRAFT column under the RECORD OF CHECKING section of the Chart A. This is done at the time of delivery of the aircraft to indicate its delivery condition. This delivery inventory shows the equipment included in the aircraft's initial basic weight and moment as listed on the Chart C, DD Form 365–3.

5–2.5. All Chart A inventories subsequent to the manufacturer's delivery inventory shall be completed as follows:

5–2.5.1. Inspect the aircraft for equipment actually installed. Place the date and station at which the inventory was made at the top of the next unused RECORD OF CHECKING column. If all columns have been used, complete a new DD Form 365–1 and mark the entries in COLUMN 1. Place a check in the IN AIRCRAFT column to indicate the presence of an item in the aircraft, or a zero to indicate its absence. If a partial quantity of an item is present at the time of inventory, the quantity of the item present shall be placed in the IN AIRCRAFT column instead of a check mark. Do not enter a check mark unless the item is installed.

NOTE

It is important to remember that the intent of the Chart A is to provide an inventory of items in basic weight. The inventory described above may have to be adjusted to provide the inventory of items in the basic weight. There may be equipment or inventory items not in the aircraft at the time of weighing which are in the aircraft's basic weight but will be installed prior to flight. These items will appear on the Form B. An example of this may be unusable fuel. Unusable fuel is part of the aircraft's basic weight but the aircraft is usually weighed with only trapped fuel. The adjustment, between unusable and trapped fuel, will have to be made on the Form B, but the Chart A will reflect unusable fuel in the basic weight.

5–2.5.2. During this inventory, note whether any new items of equipment have been installed or previous items permanently removed from the aircraft. For new items, enter on the Chart A an item number, the name or description, weight, arm, and moment data. For permanently removed items, simply line through the item as shown in Figure B–2 of APPENDIX B. Also see paragraph 5–4.3.1.

NOTE

In the manual system, marks in the IN AIRCRAFT and CHART C ENTRY columns are made only at the time of a complete inventory. Never change the marks or add new ones under a previously accomplished inventory.

5–2.5.3. Compare this new inventory with the last completed inventory under the RECORD OF CHECKING column, noting any changes in the items or quantities of equipment installed in the aircraft. Refer to Chart C to ascertain whether the necessary weight and moment corrections have been made. If so, place check marks opposite such items in the CHART C ENTRY column of Chart A. If not, correct the calculated basic weight and moment data on Chart C and then enter the CHART C ENTRY column check marks. To assist with this procedure between inventories, when a Chart A item is added or removed from the aircraft, enter the

date, in pencil, in the ITEMS AND LOCATION column of the Chart A (dates in pencil may be erased after a complete Chart A inventory has been performed). A check mark in the CHART C ENTRY column indicates the appropriate weight and moment change has been recorded on the Chart C. Make sure the name of the station at which the inventory is performed and the inventory date are entered in the RECORD OF CHECKING column on the Chart A. If desired, this information may be shown on the first page of the Chart A and the other Chart A pages may be left blank. Enter the same date in the DATE column of the Chart C for the corresponding weight and moment calculations.

5–3. DD FORM 365–2; FORM B – AIRCRAFT WEIGHING RECORD.

5–3.1. This form is used to record the data obtained from actual weighing. The form also provides the necessary instructions for computing the current weight, moment and cg of the aircraft. All entries shall be complete and either typed or clearly written in ink. In addition to the examples within this section, see APPENDIX B, Figure B–7 for a completed example.

5–3.2. The following instructions pertain to the completion and use of the form:

5–3.2.1. Fill in the identifying data (such as DATE WEIGHED and MODEL/DESIGN/SERIES) on the front page of the DD Form 365–2. Enter the actual SCALE READING data in the first column.

5–3.2.2. In the separate corrections block, enter the calibration correction as given by the calibration laboratory; scale correction factor (correction factor necessary when the scale does not return to zero after unloading and gravitational or latitude correction factor – see scale operating instructions); temperature correction factor (see scale operating instructions); equipment such as chocks, blocks, slings, and jacks included in the scale reading but not part of the aircraft weight; and any other appropriate corrections. Add all the corrections and enter in the appropriate blocks. Enter the CORRECTIONS value in column two of the Form B and adjust (per scale manufacturer's instructions) the SCALE READING in column one to obtain the NET WEIGHT in column three.

NOTE

Equipment correction factor may be itemized on the backside of this form in lieu of the correction block.

5–3.2.3. Distances E and F must be obtained and placed in the appropriate spaces on this form. When the aircraft is weighed on wing and/or fuselage jack points, distances E and F may be obtained from the aircraft –5 series TO. When weighing the aircraft on its wheels or landing gear jack points, the values of E and F in the –5 are only approximations. Their true values are determined according to the directions on the front of the form by actually measuring the distances B and D.

5–3.2.4. Add the columns to determine the SUBTOTAL (Both Main) and TOTAL (As Weighed).

5–3.2.5. For aircraft with more than two main reactions or more than one nose or tail reaction, divide the LEFT MAIN, RIGHT MAIN and NOSE OR TAIL sections as needed (see Figure 5–1).

5–3.2.6. Multiply the NET WEIGHT of the SUBTOTAL (Both Main) by the distance E (entered in the ARM column) and multiply the NET WEIGHT of the NOSE OR TAIL reaction by the distance F (entered in the ARM column) to obtain the moment values for MOMENT column.

NOTE

Do not use simplified moments unless the column heading reads MOM/XXX.

5–3.2.7. Add the SUBTOTAL (Both Main) MOMENT and the NOSE OR TAIL MOMENT to obtain the TOTAL (As Weighed) MOMENT.

5–3.2.8. Divide the TOTAL (As Weighed) MOMENT by the TOTAL (As Weighed) NET WEIGHT to obtain the TOTAL (As Weighed) ARM. This ARM is the aircraft longitudinal cg in inches from the aircraft reference datum.

5–3.2.9. Transfer the TOTAL (As Weighed) NET WEIGHT, ARM, and MOMENT to the back of the weighing form.

5–3.2.10. If oil weight is not included in the aircraft's basic weight (refer to aircraft –5 series TO), and it is desired to include it so it does not have to be added on the Form F, obtain the oil weight, arm, and moment from the aircraft CHART E LOADING DATA and enter the values on the second line on the weighing form and the word OIL in the left column on the second line. If the OIL moment obtained from the Chart E is simplified, multiply the simplified moment by the moment constant to obtain the unsimplified moment value. When the OIL arm is listed, multiply the weight by the arm to obtain the moment.

FORM B – AIRCRAFT WEIGHING RECORD	FOR USE WITH T.O. 1-1B-40, NAVAIR 01-1B-40, AND TM-55-1500-342-23	Form Approved OMB No. 0704-0188

Public reporting burden for this collection of information is estimated to average 10 minutes per response, including the time for reviewing instructions, searching existing data sources, gathering and maintaining the data needed, and completing and reviewing the collection of information. Send comments regarding this burden estimate or any other aspect of the collection of information, including suggestions for reducing this burden, to Washington Headquarters Services, Directorate for Information Operations and Reports, 1215 Jefferson Davis Highway, Suite 1204, Arlington, VA 22202-4302, and to the Office of Management and Budget. Paperwork Reduction Project (0704-0188), Washington, DC 20503.

DATE WEIGHED (YYMMDD)	MODEL/DESIGN/SERIES	SERIAL NUMBER
801120	B-52D	55-105

PLACED WEIGHED	WEIGHT AND BALANCE TECHNICIAN (Last, First, M.I.)	DUTY PHONE NUMBER
SAN ANTONIO ALC, KELLY AFB, TEXAS	R. RUNNER (CIV.)	123-456-7890

REACTION (Wheels, jackpoints, etc.)	SCALE READING	CORRECTIONS	NET WEIGHT	ARM	MOMENT
LEFT FWD MAIN	36,355	-52	36,303		
LEFT AFT MAIN	61,080	-88	60,992		
RIGHT FWD MAIN	45,260	-65	45,195		
RIGHT AFT MAIN	44,760	-64	44,696		
SUB – TOTAL (Both main)			81,498	E 538	43,845,924
NOSE OR TAIL	105,840	-152	105,688	F 1135	119,955,880
TOTAL (as weighed) Not to be posted on chart C			187,186	875.08	163,801,804

MEASUREMENTS

B= _____ the distance from the jig point, to the center of the main reactions. Obtain by measurement.

I= _____ the distance from the reference datum to the jig point of the aircraft, from which a plumb bob can be dropped to the ground. Obtain from the aircraft diagram in Chart E.

E= 538 [1] the distance from the reference datum to the center line of the main reactions.
E= I+B
E= I–B (If the jig point is aft of the center line of the main reactions.)

D= _____ the distance between the main and nose or tail reaction. Obtain by measurement.

F= 1135 [1] the distance from the reference datum to the center line of the nose or tail reaction.
F= E–D (for nose reaction)
F= E+D (for tail reaction)

CORRECTIONS	LEFT MAIN	RIGHT MAIN	NOSE OR TAIL
CALB CORR			
SCALE CORR	-52/-88	-65/-64	-152
TEMP ____ [2]			
EQUIP			
OTHER			
TOTAL	-52/-88	-65/-64	-152

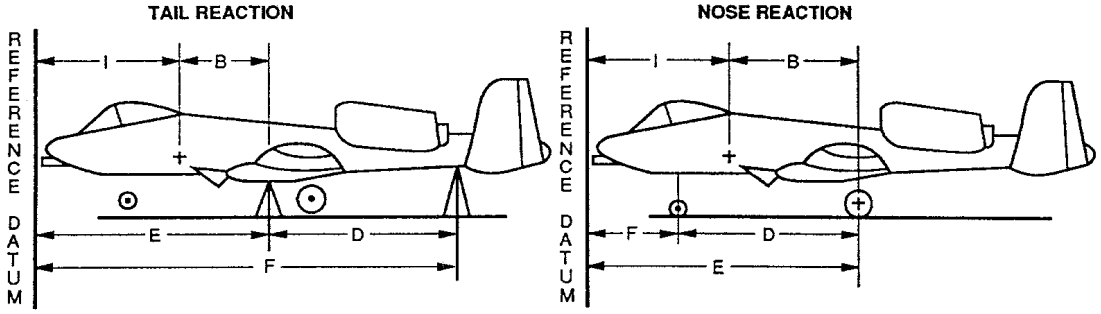

DIAGRAMS FOR MEASURING VARIOUS TYPES OF REACTIONS TO DETERMINE ARM OF SUPPORT POINTS.
See Aircraft chart E's for specific weighing instructions.

[1] Check dimensions E and F against approximate dimensions listed on Chart E.

[2] Enter temperature at time of weighing.

DD Form 365-2, FEB 90 Previous editions are obsolete.

Figure 5–1. DD Form 365–2; Form B - Aircraft Weighing Record

5–3.2.11. Complete COLUMN I and COLUMN II. If the aircraft is weighed with the fuel system completely dry, include the unusable fuel in COLUMN II. If the aircraft is weighed with the oil system completely dry, include oil in COLUMN II. Enter COLUMN I and COLUMN II totals in the appropriate spaces at the top of the form. Always refer to aircraft –5 weighing instructions.

5–3.2.12. Complete the arithmetic at the top of the form to obtain BASIC AIRCRAFT NET WEIGHT and BASIC AIRCRAFT MOMENT (basic weight and moment).

5–3.2.13. Divide the BASIC AIRCRAFT MOMENT by the BASIC AIRCRAFT NET WEIGHT to obtain the BASIC AIRCRAFT ARM. This ARM is the BASIC WEIGHT AIRCRAFT longitudinal cg position in inches from the aircraft reference datum.

5–3.2.14. Enter the BASIC AIRCRAFT INDEX or BASIC AIRCRAFT SIMPLIFIED MOMENT in the appropriate column and enter the constant (if used) at the top of the column.

5–3.2.15. The new weight and balance data established by the actual weighing shall be entered on the Chart C. Enter the new basic weight, simplified moment, and index or cg on the Chart C.

5–3.2.16. Enter the reactions used, type of scales used or manufacturer's name and part number (Revere C–55800–3–SO), serial number, date of calibration and calibration accuracy on the Form B.

5–3.2.17. Include under REMARKS, any clarifying information about the weighing such as the attitude of the aircraft when weighed, the method of support, and note if the aircraft was in a hangar.

NOTE

- When the total (as weighed) weight differs by greater then 0.2% (0.4% for aircraft with a basic weight less than 35,000 lbs) from the calculated weight, or the as weighed cg differs by greater then 0.2% MAC (0.2 inch for rotorcraft) from calculated cg, accomplish the following:

a. Check calculations for errors.

b. Check weighing preparation for errors, i.e. residual fuel, residual water, equipment, etc.

c. Check Chart C for errors.

d. Check scales for overdue calibration.

- If no errors are found, reweigh the aircraft. If the reweigh weight is consistent with the first weight, enter on the Chart C the average values of the two weights. If the reweigh is not consistent with the first weight, the aircraft should be reweighed again. The two most consistent weights should be averaged and the average entered in the Chart C.

- In the above paragraph, 0.2% MAC is the difference between the calculated or anticipated cg and the as weighed cg. As an example, if the anticipated cg is 29.3% MAC, the permitted as weighed cg may be 29.1% MAC or 29.5% MAC (29.3% MAC +/– 0.2% MAC).

5–4. DD FORM 365–3; CHART C – BASIC WEIGHT AND BALANCE RECORD.

5–4.1. The Chart C is a continuous and permanent history of the aircraft weight, moment/index and cg position. All changes to the aircraft basic weight and moment regardless of the size, shall be recorded (typed or clearly written in ink) on the Chart C to keep it correct and up–to–date. If the aircraft has a time weighing interval, this requirement may be relaxed as follows: changes less than two pounds for aircraft whose basic weight is under 25,000 pounds and changes less than five pounds for aircraft whose basic weight is over 25,000 pounds need not be recorded unless directed by TCTO or other directive. The last basic aircraft weight, moment, and cg or index shall be considered the most current data and the baseline for all subsequently dated aircraft loading calculation.

5–4.2. At the time of delivery of a new aircraft, the manufacturer enters the aircraft basic weight, moment, and cg or index on the Chart C. The itemized list of the equipment which is included in the aircraft basic weight is shown in the first IN AIRCRAFT column under the RECORD OF CHECKING section of the Chart A.

5–4.3. Additions and/or subtractions to the basic weight and moment/index on the Chart C will be accomplished as follows:

5–4.3.1. Whenever equipment is added to or removed from the aircraft, an entry must be made on this chart. If the item is listed on the Chart A, enter the identical item number, description and applicable weight, arm, and moment data on the Chart C. If the item is not listed on the Chart A, determine the item's weight, arm, and moment by other applicable TOs or actual measurement. Record this data on the Chart C and

if the item qualifies (see paragraph 5–2.1), add the data to the Chart A. Any change which is caused by a specific TO will carry a reference to the TO number. Do not enter check marks on the Chart A for these items until a complete inventory is made; but enter, in pencil, the installation or removal date in parenthesis following the description (see Figure B–2).

5–4.3.2. Subsystem modifications or structural changes shall be recorded in the same manner with the change in weight and moment added to or subtracted from the current total. Whenever such changes are provisions for equipment such as structural mounts, electrical wiring, or air conditioning, they will be listed as separate line items.

5–4.3.3. Whenever a Chart A inventory reveals equipment changes, subsystem modifications, or structural changes not already recorded in the Chart C, the change in weight and moment shall be posted as required in the preceding paragraphs. The newly calculated basic weight, moment and arm or index shall be dated to agree with the inventory date entered on the Chart A.

5–4.3.4. Whenever an aircraft is weighed, the Chart C will be updated to: (1) reflect any changes resulting from the Chart A inventory and (2) show the new basic weight, simplified moment, and index or cg from the FORM B – AIRCRAFT WEIGHING RECORD (DD Form 365–2). The date entered on the Chart C shall agree with the inventory date entered on the Chart A and the weighing date entered on Form B.

5–4.4. To eliminate the requirement for originating new Form Fs when making entries of minor weight changes on the Chart C, entries should be tabulated immediately following the last WEIGHT CHANGE entry without recalculating the basic weight. Immediately following the individual weight change column tabulations, the ADDED (+) and REMOVED (–) weight and moment totals should be summed to determine the overall weight and moment change. This overall change should be entered under the appropriate column (+ or –) and underlined to indicate that these values are to be added to or subtracted from the previous aircraft weight and moment to obtain the new basic weight and moment. Weight and moment data shall not accumulate beyond 0.1 percent (0.2 percent for aircraft with a basic weight less than 35,000 pounds) of the basic weight or beyond a resulting cg change of 0.1 percent MAC (0.1 inch for rotorcraft). When this occurs, a new current basic weight, moment and arm or index will be calculated and a new WEIGHT AND BALANCE CLEARANCE FORM F prepared. This updated basic weight, moment and arm or index entry shall include total weight and moment changes due to all the minor weight entries not previously included to that date. A new minor weight and moment change listing will begin immediately following the new basic weight, moment and arm or index entry.

NOTE

Aircraft that may receive a series of minor modifications without official AF TCTOs-such as N coded test aircraft and other test bed aircraft (as identified by the Using Command), may accumulate a basic weight change of 0.3 percent provided the cg change does not exceed 0.1 percent of MAC (0.1 inch for rotorcraft).

5–4.5. Chart C weight and balance entries regarding jet engine and afterburner replacement are:

5–4.5.1. When the moment, arm, and weight data are available, a calculated basic weight entry may be made in lieu of weighing the aircraft. In cases where the weight, arm, and moment information for the jet engine or afterburner are variable and cannot be readily ascertained, the aircraft shall be weighed by the activity making the change and a Chart C basic weight and moment/index value entry will be made to show the results of the actual aircraft weighing after the engine or afterburner change. The engine serial number and proper designating nomenclature will be entered on the Chart C even though a specific weight entry cannot be made.

5–4.5.2. On certain aircraft where the balance is not greatly affected by the weight variation in the replacement of jet engines or afterburners, the appropriate –5 series TO will state that the Chart C and Chart A entries are not required each time an engine or afterburner change is made. This exemption applies only to engine or afterburner replacements of the same series.

5–5. CHART E LOADING DATA. The CHART E LOADING DATA is that part of a –5 series TO which provides the aircraft weight and cg limits and the weights and moments (obtained from graphs, charts, and tables) of all variable load items.

5–6. DD FORM 365–4; WEIGHT AND BALANCE CLEARANCE FORM F.

5–6.1. The Form F is the summary of the actual disposition of the load carried by the aircraft. It is the official record of the computations done by the weight and balance technician to ensure the weight and cg limits are not exceeded at takeoff, during flight, or at landing due to loading conditions. If actual weight and/or cg values of the load carried are available, those values should be used in lieu of published values.

NOTE

DD Form 365–4 weight and balance clearance requirements are contained in Section IV.

5–6.1.1. There are two versions of the Form F, TRANSPORT and TACTICAL. They were designed to provide for the respective loading arrangements of these two types of aircraft. The general use and fulfillment of either version is the same, although separate instructions for filling out each version are given here. In the case of multi–purpose aircraft, the choice of which version to use will be the responsibility of the Using Command. When reproducing the DD Form 365–4, only the version (side) to be used needs to be reproduced. After completing the Form F, one copy must be filed in accordance with para 4–9.6 and a copy should remain in the aircraft for the duration of the flight.

NOTE

- A sample for tactical aircraft is made out in accordance with the loading problem given in APPENDIX B.
- Electronic Computer data sheets, approved in accordance with Section IX, may be used in lieu of the DD Form 365–4 provided these sheets contain, as a minimum, the necessary weight and balance data as defined by the –5 series TO to showload computations, gross weight and cg. The date, aircraft serial number and name of responsible personnel must be documented on the sheet. The sheet does not have to resemble the DD Form 365–4 in looks.
- Only items not included in basic weight shall be entered on the Form F. As an example, some aircraft include oil and pylons in the basic weight and therefore these items must not be included separately on the Form F.

5–6.2. TRANSPORT AIRCRAFT DD FORM 365–4. The following instructions illustrate the use of CHART E LOADING DATA for completion of the TRANSPORT FORM F. If a load adjuster is used in lieu of the Chart E, enter the load adjuster plate number in the appropriate block and use index numbers in lieu of simplified moments throughout the form. See Section X for instructions regarding the use of a load adjuster in completing a Form F.

5–6.2.1. Enter the necessary identifying information on the top of the form.

5–6.2.2. Ref 1. Enter the aircraft basic weight and simplified moment/index. Obtain these from the last entry in the column titled CURRENT TOTAL BASIC AIRCRAFT on DD FORM 365–3; CHART C – BASIC WEIGHT AND BALANCE RECORD.

5–6.2.3. Ref 2. Enter the word OIL and the number of gallons, weight, and simplified moment/index of the oil, if not included in basic weight.

5–6.2.4. Ref 3. Enter the number, weight, and simplified moment/index of the crew. Use actual crew weights if available.

5–6.2.5. Ref 4. Enter the weight and simplified moment/index of the crew's baggage.

5–6.2.6. Ref 5. Enter the weight and simplified moment/index of the steward's equipment.

5–6.2.7. Ref 6. Enter the weight and simplified moment/index of any emergency equipment not included in the BASIC AIRCRAFT entry.

5–6.2.8. Ref 7. Enter the weight and simplified moment/index of any extra equipment not included in basic weight.

5–6.2.9. Ref 8. As required by the Command.

5–6.2.10. Ref 9. Enter at OPERATING WEIGHT, the sum of the weights and the sum of the simplified moments/index of Ref 1 through Ref 8.

5–6.2.11. Ref 10. Enter the number of gallons, weight, and simplified moment/index of the fuel on board at takeoff. List under REMARKS, the fuel tanks affected and the amount of fuel in each tank (as required).

5–6.2.12. Ref 11. Enter the number of gallons, weight, and simplified moment/index of water injection fluid.

5–6.2.13. Ref 12. Enter the sum of the weights and the sum of the simplified moments (or last running index) of Ref 9 through Ref 11.

5–6.2.14. LIMITATIONS. The maximum ALLOWABLE LOAD to be entered in Ref 1, is based on takeoff, landing, limiting wing fuel and/or ground handling restrictions (see applicable –1 and –5 series TO), and is computed in the LIMITATIONS table on the lower left–hand corner of the Form F as follows:

5–6.2.14.1. Enter the ALLOWABLE GROSS WEIGHT for TAKEOFF and LANDING. If the aircraft can have a gross weight restriction above which all weight must be fuel in the wings (zero wing fuel gross weight), enter the ALLOWABLE GROSS WEIGHT for LIMITING WING FUEL in the last column of the LIMITATIONS table.

5–6.2.14.2. If the aircraft ALLOWABLE GROSS WEIGHT can be limited by a taxiing and/or ground handling gross weight, use the REMARKS section for subtracting the warm up and/or taxi fuel from the maximum permissible ground handling gross weight. The resulting value will be entered in the ALLOWABLE GROSS WEIGHT FOR TAKEOFF block of the LIMITATIONS table and a statement similar to the following will be noted in the REMARKS section: ALLOWABLE GROSS WEIGHT FOR TAKEOFF LIMITED BY MAXIMUM TAXI GROSS WEIGHT.

5–6.2.14.3. Determine the ALLOWABLE LOAD for TAKEOFF by subtracting the TOTAL AIRCRAFT WEIGHT (Ref 12) from the TAKEOFF ALLOWABLE GROSS WEIGHT. Determine the ALLOWABLE LOAD for LANDING by subtracting the OPERATING WEIGHT (Ref 9) plus ESTIMATED LANDING FUEL WEIGHT (Ref 23) from the LANDING ALLOWABLE GROSS WEIGHT. Determine the LIMITING WING FUEL ALLOWABLE LOAD by subtracting the OPERATING WEIGHT (Ref 9) from the LIMITING WING FUEL ALLOWABLE GROSS WEIGHT.

5–6.2.15. Ref 13. Enter the compartment designation, number of passengers, average passenger weight, and the weight of the cargo. Use actual weights if available. Enter the total for each compartment or item in the weight and simplified moment/index columns. Large cargo items, standard passenger loads, or items loaded on pallets may be entered by a combination of items when the CHART E LOADING DATA of the appropriate –5 series TO specifies that such entries may be made. If desired for statistical purposes, the total freight weight may be listed in the space provided under REMARKS. The weight and simplified moment/ index of Ref 13 may be totaled and entered on the line above Ref 14.

NOTE

The total weight of Ref 13 shall not exceed the smallest ALLOWABLE LOAD determined in the LIMITATIONS table.

5–6.2.16. Ref 14 is provided for aircraft requiring Zero Fuel Weight (ZFW), Zero Fuel Weight Index or Moment (ZFW Index or MOM), and Zero Fuel Percent of MAC (ZF% MAC) computations. To determine the required values:

5–6.2.16.1. Add the weights and simplified moments (or last running index) of OPERATING WEIGHT, (Ref 9) and DISTRIBUTION OF ALLOWABLE LOAD (PAYLOAD), (Ref 13, 14, or 15) if applicable. Enter calculated values.

5–6.2.16.2. Compute Zero Fuel Percent of MAC (ZF% MAC) and enter in the appropriate block.

5–6.2.16.3. Enter the PERMISSIBLE CG ZERO FUEL WEIGHT forward and aft cg limits from the cg limitations tables of the applicable Chart E in the space provided in the LIMITATIONS table.

5–6.2.16.4. Ensure the Zero Fuel Weight (ZFW) value complies with the ZERO FUEL OR LIMITING WING FUEL limitations as set forth by the applicable Basic Weight Checklist and Loading Data (–5). If not, adjust load accordingly.

5–6.2.16.5. Ensure the ZERO FUEL WEIGHT PERCENT OF MAC (ZF% MAC) does not exceed the PERMISSIBLE CG ZERO FUEL WEIGHT forward and aft cg limits. If it does, adjust load accordingly.

5–6.2.17. Ref 15. As required by the Command.

5–6.2.18. Ref l6. Enter the sum of the weights and the sum of the simplified moment (or last running index) for Ref 12 through Ref 15 in the space provided for TAKEOFF CONDITION (Uncorrected).

5–6.2.19. Ref 17. Enter the TAKEOFF CG (Uncorrected) as determined from the weight and simplified moment/index values of Ref 16.

5–6.2.20. Check the weight value from Ref 16 to ensure it does not exceed the ALLOWABLE GROSS WEIGHT for TAKEOFF as shown in the LIMITATIONS table. Use the Ref 16 TAKEOFF CONDITION (Uncorrected) gross weight to determine the PERMISSIBLE CG TAKEOFF forward and aft cg limits from the cg limitations tables of the applicable CHART E LOADING DATA. If the takeoff cg of Ref 17 is

within these PERMISSIBLE CG TAKEOFF limits, enter the limits in the space provided in the LIMITATIONS table.

NOTE

- The weight–simplified moment to cg tables in the Chart E are not accurate enough to use near the forward and aft cg limits. If a cg is read off these tables and it is located one cg interval (the spacing between the listed cg values, such as 0.5, 1.0, or 2.0 percent MAC) from a cg limit, or closer, the cg must be arithmetically calculated to an accuracy of 0.1 percent MAC.

- The Chart E cg table and the cg grid on the load adjuster account for any required adjustment to the moment values for the cg limits due to retraction of the landing gear. If the takeoff cg position is calculated using the equation presented in the Chart E, refer to the Chart E cg table NOTES for any required moment adjustments due to the retraction of the landing gear.

5–6.2.21. Ref 18. Where the takeoff weight of Ref 16 and/or the takeoff cg of Ref 17 are not within permissible takeoff weight and cg limits, or if changes in the amount or distribution of load are required, the necessary load adjustments must be noted in the CORRECTIONS columns on the left–hand portion of the Form F. Enter a brief description of the necessary load adjustment in the left–hand column with the weight and simplified moment/index listed in the columns provided. Add weight and simplified moment increases and/or decreases to obtain the net change (+ or –) in the amount or distribution of the load. If a load adjuster is used, the revised index for each correction item rather than plus or minus index changes is entered. Transfer the total weight adjustment and simplified moment/index adjustment to the spaces provided for Ref 18 CORRECTIONS (if required).

NOTE

When using a load adjuster and computing a running index, the index in Ref 16 TAKEOFF CONDITION (Uncorrected) should be used as a starting point for all corrections.

5–6.2.22. Ref 19. In the space provided for TAKEOFF CONDITION (Corrected), enter the sum of Ref 16 and Ref 18.

5–6.2.23. Ref 20. Enter the TAKEOFF CG IN % MAC OR IN, as determined from the weight and simplified moment/index values of Ref 19.

5–6.2.24. Check the weight value from Ref 19 to ensure it does not exceed the ALLOWABLE GROSS WEIGHT for TAKEOFF as shown in the LIMITATIONS table. Use the Ref 19 TAKEOFF CONDITION (Corrected) gross weight to recheck the PERMISSABLE CG TAKEOFF forward and aft cg limits from the cg limitations tables of the applicable CHART E LOADING DATA. Recheck the takeoff cg of Ref 20 to ensure it is within the permissible cg takeoff limits. Enter these limits in the space provided in the LIMITATIONS table.

NOTE

Ref 21–25 will be accomplished unless otherwise directed by the Using Command.

5–6.2.25. Ref 21. Enter Zero Fuel Weight and simplified moment/index.

5–6.2.26. Ref 22.

5–6.2.26.1. Enter the weight and simplified moment/index of any aerial load to be dropped before landing.

5–6.2.26.2. Enter the weight and simplified moment/index of any miscellaneous items to be expended or added prior to landing. Explain in REMARKS if necessary.

5–6.2.27. Ref 23. Determine the ESTIMATED LANDING FUEL weight and simplified moment/index.

5–6.2.28. Ref 24. Determine the ESTIMATED LANDING CONDITION by subtracting/adding the total weights and simplified moments of Ref 21 and Ref 22. Add these values to Ref 23.

5–6.2.29. Ref 25. Enter the ESTIMATED LANDING CG IN % MAC OR IN as determined from the weight and simplified moment/index values of Ref 24.

5–6.2.30. Check the weight value from Ref 24 to ensure it does not exceed the ALLOWABLE GROSS WEIGHT for LANDING as shown in the LIMITATIONS table.

Use the Ref 24 ESTIMATED LANDING CONDITION gross weight to determine the PERMISSIBLE CG LANDING forward and aft cg limits from the cg limitations tables of the

applicable CHART E LOADING DATA. If the estimated landing cg of Ref 25 is within these PERMISSIBLE CG LANDING limits, enter them in the spaces provided in the LIMITATIONS table.

5–6.2.31. When the estimated landing weight of Ref 24 and/or the estimated landing cg of Ref 25 are not within permissible landing weight and cg limits, changes in the amount or distribution of load and/or fuel are required.

5–6.2.32. In the blocks provided in the left–hand portion of the Form F, calculate the most forward cg and most aft cg to be attained during flight, unless the cg is monitored during flight (see Section VII). The CHART E LOADING DATA may indicate which loading conditions lead to the most forward and most aft cg positions during flight. Check the cg limitations tables of the applicable CHART E LOADING DATA to assure the cg is within the permissible cg limits.

5–6.2.33. When the most forward cg position and/or the most aft cg position does not remain within permissible cg limits for flight, changes in the amount or distribution of load and/or fuel and/or the fuel sequence are required.

5–6.2.34. The following signatures, though not required on the automated Form F, will appear at the bottom of the DD Form 365–4 unless otherwise stated:

5–6.2.34.1. COMPUTED BY – The signature of a qualified weight and balance technician or other qualified person (in accordance with Section IV) who computed the data and prepared the Form F will appear in this block.

5–6.2.34.2. WEIGHT AND BALANCE AUTHORITY– The signature is optional dependent upon organizational structure.

5–6.2.34.3. PILOT – The name of the pilot will appear on every Form F submitted by the pilot or another crew member for flight clearance. The pilot's name is not required on a prefiled (CANNED) Form F.

NOTE

The purpose of the pilot's name is to indicate that the Form F has been checked for currency and accuracy. In the case of a CANNED Form F, the pilot indicates the final check of the form by inserting the appropriate Form F reference on the DD Form 175 (Military Flight Plan).

5–6.3. TACTICAL AIRCRAFT DD FORM 365–4. The following instructions illustrate the use of CHART E LOADING DATA for completion of the TACTICAL FORM F. If a load adjuster is used in lieu of the Chart E, enter the load adjuster plate number in the REMARKS block and use index numbers in lieu of simplified moments throughout the form. See Section X, for instructions regarding the use of a load adjuster in completing a Form F.

5–6.3.1. Insert the necessary identifying information at the top of the form.

5–6.3.2. Ref 1. Enter the aircraft basic weight and simplified moment/index. Obtain these from the last entry in the column titled CURRENT TOTAL BASIC AIRCRAFT on DD FORM 365–3; CHART C – BASIC WEIGHT AND BALANCE RECORD.

5–6.3.3. Ref 2. Enter the word OIL and the number of gallons, weight, and simplified moment/index of the oil if not included in basic weight.

5–6.3.4. Ref 3. Enter the item description, weight, and simplified moment/index of all non–expendable items not in the basic weight (and not otherwise accounted for) such as crew, baggage, cargo, pylons, racks, ballast, and emergency equipment. Use actual weights if available.

5–6.3.5. Ref 4. Enter at OPERATING WEIGHT, the sum of the weights and the sum of the simplified moment/index of Ref 1 through Ref 3.

5–6.3.6. Ref 5. Enter the item description (type, and number of rounds), weight and simplified moment/index of all ammunition.

5–6.3.7. Ref 6. Enter the item description, weight, and simplified moment/index of all ordnance such as bombs, torpedoes, and rockets and all ordnance suspension equipment such as pylons and racks which are expendable.

5–6.3.8. Ref 7. Enter the number of gallons, location, weight, and simplified moment/index of the fuel on board at takeoff. List under REMARKS the fuel tanks affected and the amount of fuel in each tank (as required).

5–6.3.9. Ref 8. Enter the item descriptions, weights, and simplified moments/index of the miscellaneous items such as water injection fluid, JATO bottles, or RATO fuel. In the event JATO or RATO provisions are to be expended after takeoff, these items and their weights should also be entered here.

5–6.3.10. Ref 9. Enter at TAKEOFF CONDITION (Uncorrected) the sum of the weights and simplified moments/index for Ref 4 through Ref 8.

5–6.3.11. Ref 10. Enter the TAKEOFF CG (Uncorrected) as determined from the weight and simplified moment/index values of Ref 9.

5–6.3.12. Enter the allowable GROSS WEIGHT TAKEOFF and GROSS WEIGHT LANDING (see applicable –5 series TO) in the LIMITATIONS table on the lower left–hand corner of the Form F. The most restrictive Takeoff Weight and Landing Weight conditions for the intended mission shall be entered on this table.

5–6.3.13. Check the weight value from Ref 9 to ensure it does not exceed the allowable GROSS WEIGHT TAKEOFF as shown in the LIMITATIONS table. Use the Ref 9 TAKEOFF CONDITION (Uncorrected), gross weight to determine the PERMISSIBLE CG TAKEOFF forward and aft cg limits from the cg limitations tables in the applicable CHART E LOADING DATA. If the takeoff cg of Ref 10 is within these PERMISSIBLE CG TAKEOFF limits, enter the permissible limits in the space provided in the LIMITATIONS table. The most restrictive Takeoff Weight Center of Gravity and Landing Weight Center of Gravity conditions for the intended mission shall be entered on the limitation table.

NOTE

- The weight–simplified moment to cg tables in the Chart E are not accurate enough to use near the forward and aft cg limits. If a cg is read off these tables, and it is located one cg interval (the spacing between the listed cg values; such as 0.5, 1.0, or 2.0 percent MAC) from a cg limit, or closer, the cg must be arithmetically calculated to an accuracy of 0.1 percent MAC.

- The Chart E cg table or the cg grid on the load adjuster account for any required adjustment to the moment values for the cg limits due to retraction of the landing gear. If the takeoff cg position is calculated using the equation presented in the Chart E, refer to the Chart E cg table NOTES for any required moment adjustments due to the retraction of the landing gear.

5–6.3.14. Ref 11. When the takeoff weight of Ref 9 and/or the takeoff cg of Ref 10 are not within permissible takeoff weight and/or cg limits, changes in the amount or distribution of load (Ref 3 through Ref 8) are required, and the necessary load adjustments must be noted in the CORRECTIONS columns on the left–hand portion of the Form F. Enter a brief description of the necessary load adjustment in the left–hand column with the weight and simplified moment/ index listed in the columns provided. Sum all the weight and simplified moment increases and/or decreases to obtain the net change (+ or –) in the amount or distribution of the load. If a load adjuster or balance computer is used, the revised index for each correction item, rather than plus or minus index changes, is entered. Transfer the total weight and simplified moment/ index adjustment to the spaces provided for Ref 11 CORRECTIONS (If required).

NOTE

When using a load adjuster and computing a running index, the index in Ref 9 TAKEOFF CONDITION (Uncorrected) should be used as a beginning for all computations.

5–6.3.15. Ref 12. In the space provided for TAKEOFF CONDITION (Corrected), enter the sum of Ref 9 and Ref 11.

5–6.3.16. Ref 13. Enter the TAKEOFF CG (Corrected), as determined from the weight and simplified moment/index values of Ref 12.

5–6.3.17. Check the weight value from Ref 12 to ensure it does not exceed the allowable GROSS WEIGHT TAKEOFF as shown in the LIMITATIONS table. Use the Ref 12 TAKEOFF CONDITION (Corrected) gross weight to recheck the PERMISSIBLE CG TAKEOFF forward and aft cg limits from the cg limitations tables of the applicable CHART E LOADING DATA. Recheck the takeoff cg of Ref 13 to ensure it is within the PERMISSIBLE CG TAKEOFF limits.

5–6.3.18. Ref 14. Enter the total TAKEOFF FUEL weight and simplified moment/index from Ref 7 plus/minus any fuel corrections/adjustments from Ref 11. Enter the total weight and simplified moment/index of expendable items such as ammunition (not including the weight of cases and links if retained), bombs, rockets, torpedoes, and external fuel tanks that are to be dropped during flight. Explain under REMARKS, if necessary.

NOTE

Ref 15–17 will be accomplished unless otherwise directed by the Command.

5–6.3.19. Ref 15. Determine the ESTIMATED LANDING FUEL weight and simplified moment/index and enter it in the space provided.

5–6.3.20. Ref 16. Determine the ESTIMATED LANDING CONDITION by subtracting the total expendable weights and simplified moments of Ref 14 from the Ref 12 weight and simplified moment and adding the weight and simplified moment of Ref 15.

5–6.3.21. Ref 17. Enter the ESTIMATED LANDING CG as determined from the weight and simplified moment/index values of Ref 16.

5–6.3.22. Check the weight value from Ref 16 to ensure it does not exceed the allowable GROSS WEIGHT LANDING as shown in the LIMITATIONS table. Use the Ref 16 ESTIMATED LANDING CONDITION gross weight to determine the PERMISSIBLE CG LANDING forward and aft cg limits from the cg limitations tables of the applicable CHART E LOADING DATA. If the ESTIMATED LANDING CG of Ref 17 is within these PERMISSIBLE CG LANDING limits, enter them in the spaces provided in the LIMITATIONS table.

5–6.3.23. When the ESTIMATED LANDING CONDITION of Ref 16 and/or the ESTIMATED LANDING CG of Ref 17 are not within permissible landing weight and/or cg limits, changes in the amount or distribution of load and/or fuel are required. A new Form F will be completed.

5–6.3.24. In the blocks provided in the upper left–hand portion of the Form F, calculate the most forward and most aft cg to be attained during flight unless the cg is monitored during flight (see Section VII). The CHART E LOADING DATA may indicate which loading conditions lead to the most forward and most aft cg positions during flight. Check the cg limitations tables of the applicable CHART E LOADING DATA to assure the cg is within the permissible cg limits for flight.

5–6.3.25. When the most forward cg position and/or the most aft cg position does not remain within permissible cg limits for flight, changes in the amount or distribution of load and/or fuel and/or the fuel sequence are required.

5–6.3.26. The following signatures, though not required on the automated Form F, will appear at the bottom of the DD Form 365–4 unless otherwise stated:

5–6.3.26.1. COMPUTED BY– The signature of a qualified weight and balance technician or other qualified person (in accordance with Section IV) who computed the data and prepared the Form F will appear in this block.

5–6.3.26.2. WEIGHT AND BALANCE AUTHORITY– The signature is optional dependent upon the organizational structure.

5–6.3.26.3. PILOT– The name of the pilot will appear on all Form Fs submitted by the pilot and/or crew member for flight clearance. The pilot's name is not required on a pre–filed (CANNED) Form F.

NOTE

The purpose of the pilot name is to indicate the Form F has been checked for currency and accuracy. In the case of a CANNED Form F the pilot indicates the final check of the form by inserting the appropriate Form F reference on the DD 175.

5–7. LOCALLY GENERATED FORMS Locally generated forms may be used to assist in weight and balance tasks, but must have the approval of the organization that has engineering responsibility for the baseline aircraft before they may be used. All form changes must have prior approval before incorporation.

SECTION VI
WEIGHING AIRCRAFT

6–1. GENERAL. Aircraft weighings are required as outlined in Section IV. Weighing with calibrated scales is the only sure method of obtaining an accurate basic weight and cg location on an aircraft. When an aircraft is to be weighed, it should be as near to its basic weight configuration as possible, less fuel and other expendable load items, and must be inventoried for equipment actually present in the aircraft.

6–2. WEIGHING EQUIPMENT. Refer to the 35B2 series T O. A variety of scales and equipment may be used for weighing aircraft. At the present time, standardization tends toward an electronic portable scale for use in the field where permanent installations are not practical. Weighing equipment is managed by Warner–Robbins ALC.

NOTE

Aircraft weighing equipment will be used to weigh aircraft only.

6–2.1. ELECTRONIC WEIGHING KIT. An electronic weighing kit containing load cells is shown in figure 6–1. These load cells are attached to axle jacks or wing jacks when weighing aircraft. A load cell is attached to the top of each jack. Many kits have adapters so that the load cell will fit properly to the various types of jacks (see figure 6–2). Wing jacks usually have a 1 inch hole in the top of the jack head and therefore only a corresponding plug type load cell adapter can be used. Ring type load cell adapters with setscrews are usually used with axle jacks. These setscrews must be tightened by an Allen wrench (one is provided in the weighing kit). The load cell must be placed squarely and symmetrically on top of the jack head. Some weighing kits also come with two jack pad adapters, the use of which depends upon the shape of the jack. Once the load cell is mounted and the necessary jack pad adapter is attached, the jack must then be placed vertically under the corresponding aircraft jack pad. When the aircraft is raised and leveled, its weight forces are measured and transmitted electronically from the load cells to a weight readout device. Complete operating instructions accompany each weighing kit, and strict adherence to the instructions is necessary to ensure accurate results.

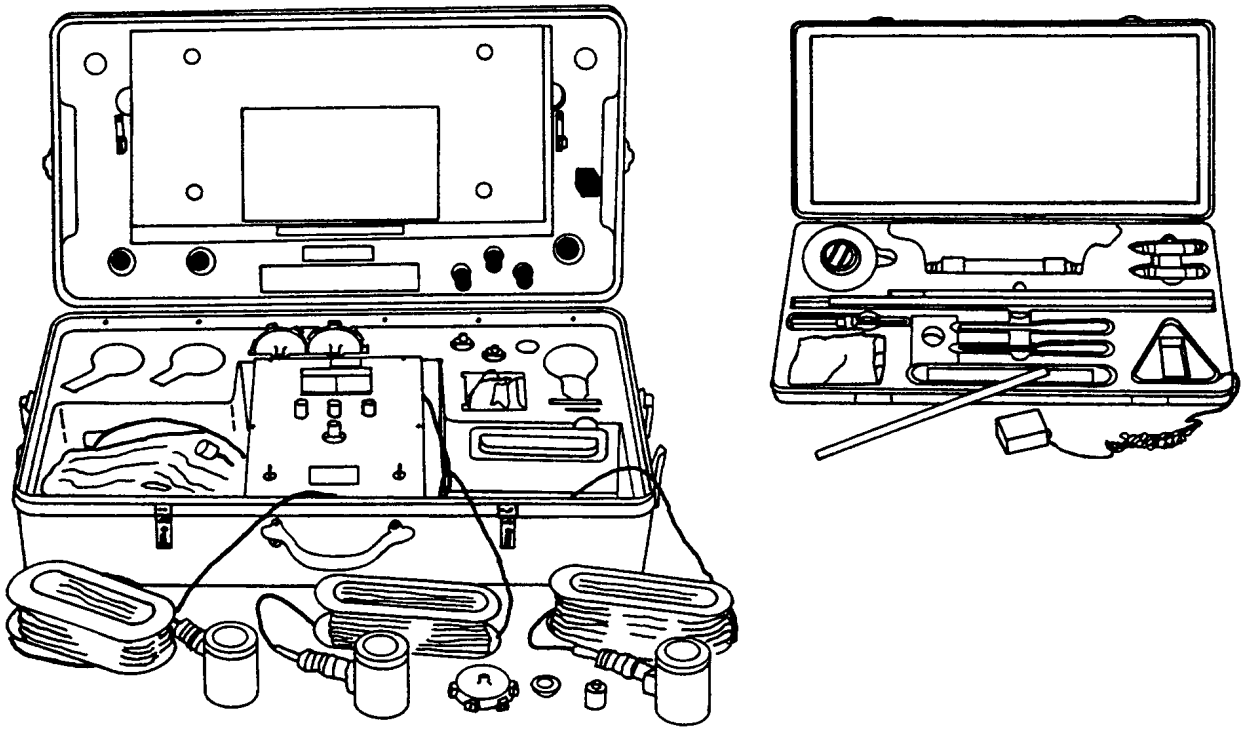

Figure 6–1. Electronic Weighing Kit and Accessory Weighing Kit

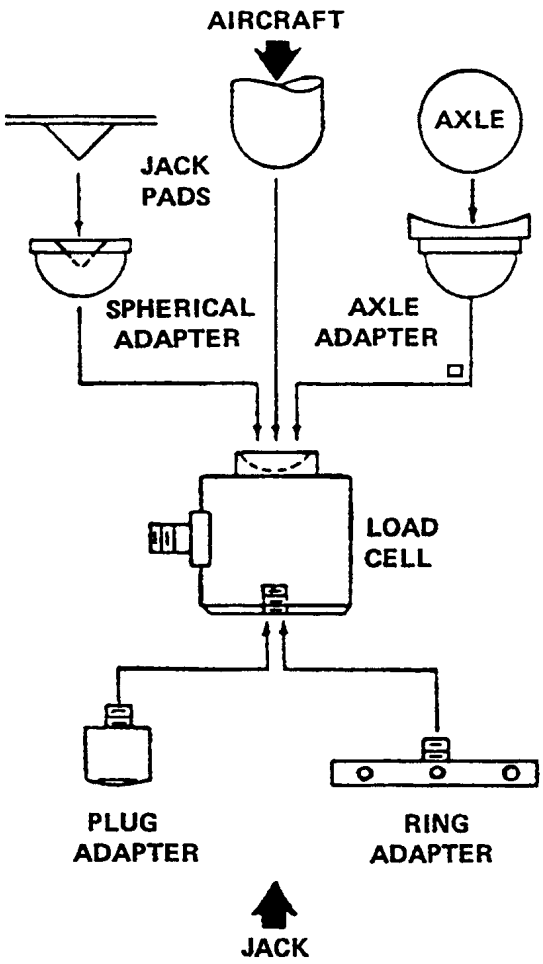

Figure 6–2. Load Cell Arrangement

6–2.2. PORTABLE PLATFORM AIRCRAFT SCALES. This system, shown in figure 6–3, is designed to provide weight data. This system can also be used to check the accuracy and validity of integral weight and balance systems. The complete system is portable and either includes a trailer for storage and transport, or is mounted on a single 88 x 108 inch pallet. The aircraft is towed upon the platform scales and the resulting weight forces are measured. An advantage of this system is that the aircraft does not have to be jacked, thus minimizing side loads. Complete operating instructions accompany this unit and strict adherence to the instructions is necessary to ensure accurate results.

6–2.3. STATIONARY PIT TYPE SCALES. Most of the larger scales are of the stationary beam and lever balance type (see figure 6–4). These scales are commonly flush floor installations, although some are used as surface–type portable scales. The flush floor installation is generally in a permanent location and the aircraft must be taken to them. However, some flush floor scales have the capability to be removed from their installations, when necessary, and taken to the aircraft. These scales are usually expensive and normally require a special building or hangar.

6–2.4. CALIBRATION OF WEIGHING EQUIPMENT. Commanders of Air Force organizations which operate, maintain, or modify aircraft are responsible for ensuring that weighing equipment under their jurisdiction are calibrated periodically and certified by a government inspector of weights and measures or by commercial scale officials in accordance with TO 00–20–14 and TO 33K–1–100. Unless directed in the above TO, the large flush floor permanent (pit type) scales should be calibrated or certified correct at least once every 12 months.

6–3. WEIGHING ACCESSORIES. To measure such data as lengths, angles, and densities, weight and balance personnel require accessories such as levels, plumb bobs, measuring tapes, chalk lines and hydrometers. This equipment normally is included in electronic weighing kits (see figure 6–1). It may often be necessary to prepare special devices that will facilitate taking measurements and leveling specific types of aircraft. Special equipment, when required, will be called out in the aircraft –5 series TO.

6–3.1. SPIRIT LEVEL. At least one spirit level is required for leveling most aircraft. It is important that the level be of the machinist bench type and of first–class quality with ground and graduated main vials and plumb vials. A calibrated inclinometer or digital protractor may be used in lieu of a spirit level on many aircraft.

6–3.2. LEVELING BARS. Several leveling bars of varying lengths are needed for spanning the distances between leveling lugs. One set of bars normally comes with the electronic weighing kit. Some aircraft require special bars that will be called out in the respective –5 series TO.

6–3.3. PLUMB BOBS. Plumb bobs are used to project points on the aircraft onto the floor for measuring dimensions in a level plane and for leveling some aircraft. Each plumb bob should have a slot in the head so that excess string, which could interfere with the free swing of the plumb bob, can be wound around the neck. Plumb bobs are normally included in the electronic weighing kit.

6–3.4. STEEL TAPES. A steel tape 600 inches in length and graduated in inches and tenths of inches is desired. Since all weighing dimensions must be read to one tenth of an inch, and are frequently read to one hundredth of an inch, this type of tape eliminates the nuisance and the possibility of errors associated with converting common fractions to decimals. Tapes, as described, are usually in the electronic weighing kit.

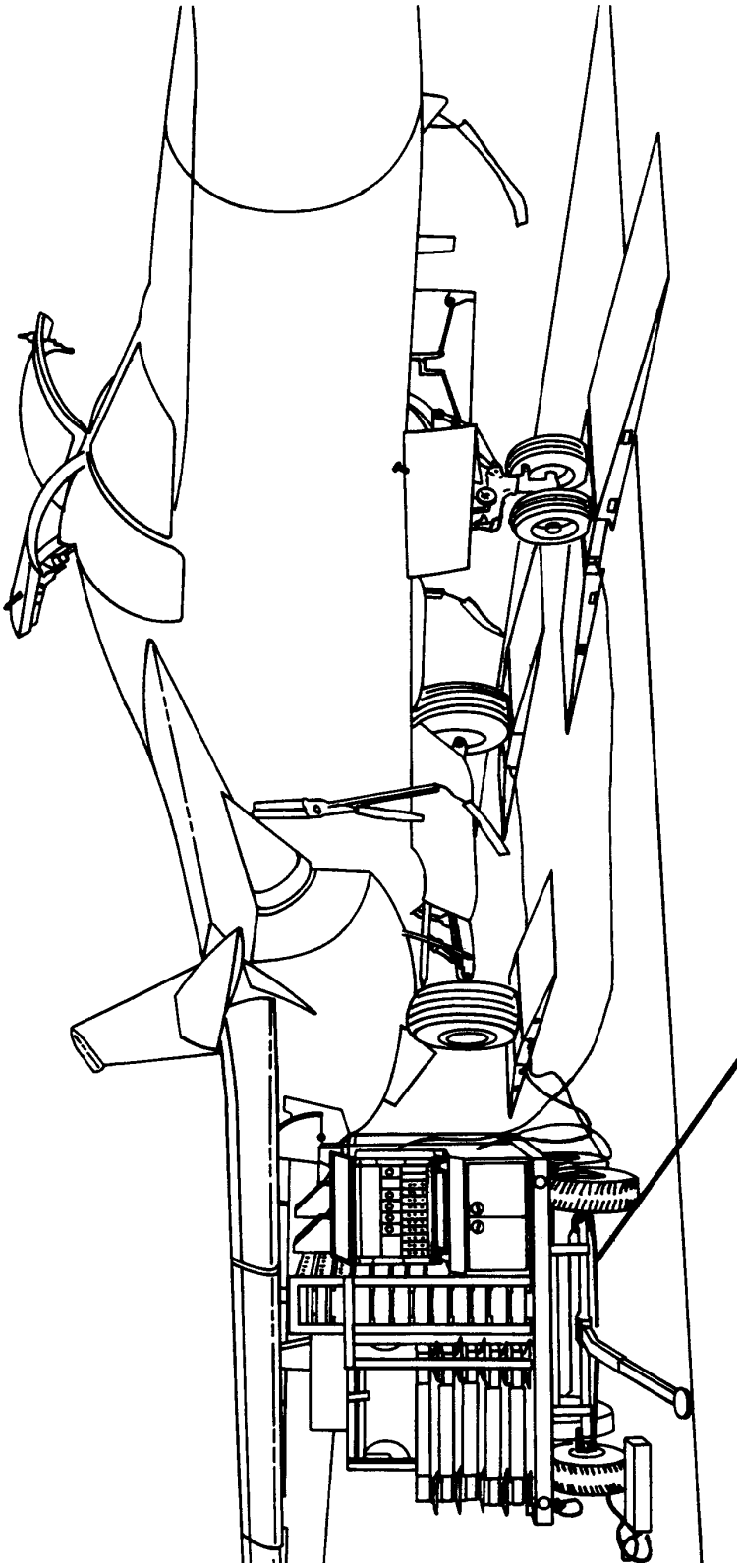

Figure 6–3. Portable Platform Aircraft Scales

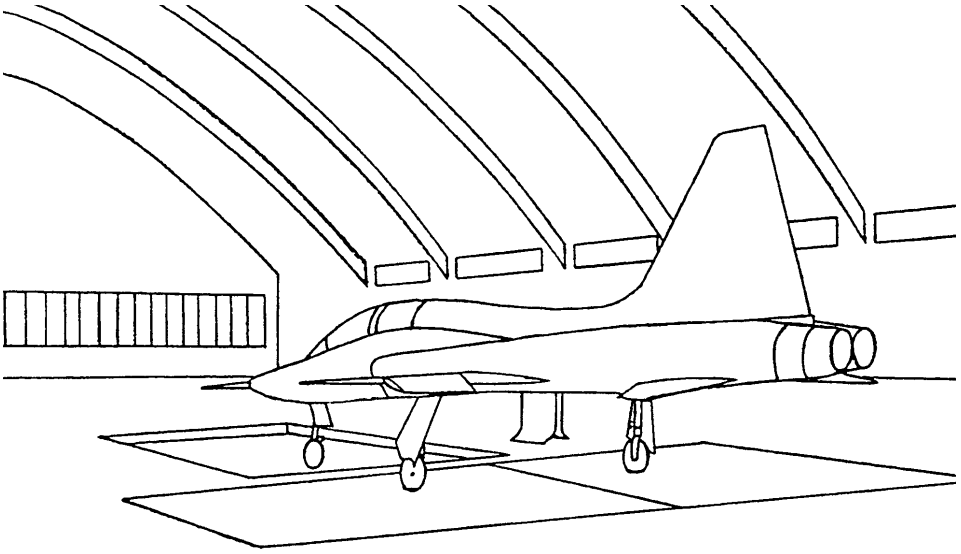

Figure 6–4. Stationary Pit Type Scales

6–3.5. CHALK LINE. This is a string, covered with chalk, which is used to mark a straight chalked line on the hangar floor between the vertical projections of the main reaction points or jig locations. The string should be sturdy and hard finished. The electronic weighing kit usually includes a chalk line reel.

6–3.6. HYDROMETERS. A hydrometer with a calibration range from 5.5 to 7.0 pounds per US gallon should be used for determining the density of fuel when required. A transparent container for holding fuel samples, a pipette at least 12 inches long, or some other similar device for withdrawing samples from the tank is necessary for use with the hydrometer. This equipment is incorporated within the weighing kit. Care must be taken not to damage the glassware. When determining the density of a fuel sample, the hydrometer should be carefully placed into the fluid within the transparent container. When reading the density, the hydrometer must not touch the container and the reading should be taken at the lowest fuel point (see figure 6–5).

6–3.7. ACCESSORY WEIGHING KIT. A kit containing compartments for each accessory weighing item should be provided for storing and carrying the weighing accessories. (See figure 6–6). This is a necessary precaution against loss. Some electric weighing kits have the accessories incorporated in the kit for convenience.

6–3.8. AIRCRAFT JACKS. An approved type of jack is required to raise the aircraft to a level position clear of the hangar floor. A good quality standard jack, with suitable capacity and extension range, should be used. The jack must have an ample flat base area and have a suitable head, or adapter, to retain the load cells and thus prevent slippage and resulting damage to the aircraft. The capacity of the jack points should also be checked to ensure the points would not be overloaded while weighing the aircraft.

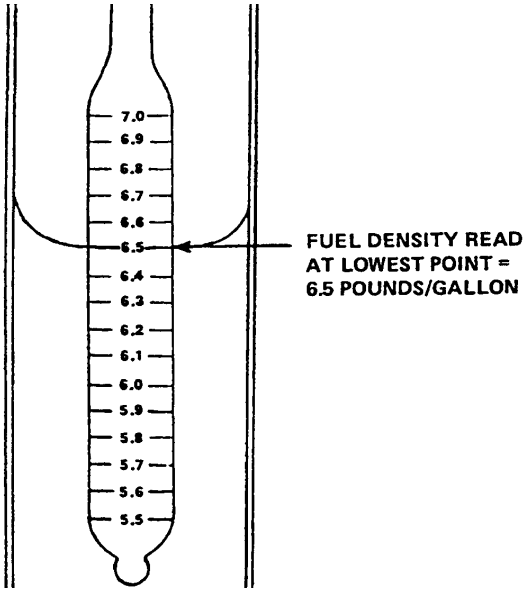

Figure 6–5. Reading a Hydrometer

6–4. WEIGHING PROCEDURES. A defined and orderly aircraft weighing procedure lessens the chance of omitting necessary dimensional or scale readings. The following procedure has been successfully used to accomplish proper aircraft weighing. The choice of an alternative procedure depends upon the equipment at hand, the circum-

stances under which the aircraft is to be weighed and is at the discretion of the Weight and Balance Authority. Always refer to the particular aircraft –5 series TO for specific weighing instructions and/or procedures.

NOTE

All resulting weight and balance data is meaningless if proper weighing procedures were not accurately controlled and performed during the weighing.

6–4.1. PREPARATION FOR WEIGHING AIRCRAFT. The following describes the recommended procedure to prepare an aircraft for weighing:

6–4.1.1. Thoroughly clean the aircraft inside and out, removing dirt, grease and moisture. Allow the aircraft sufficient time to dry prior to weighing.

6–4.1.2. Assemble the required weighing equipment, including scales, hoisting equipment, jacks, cribbing, leveling bars, level, measuring tape, plumb bobs and chalk line.

NOTE

It is important that the fuel in the aircraft at the time of weighing duplicates the condition that has been established by the manufacture's testing, and which data is provided in the aircraft –5 series TO.

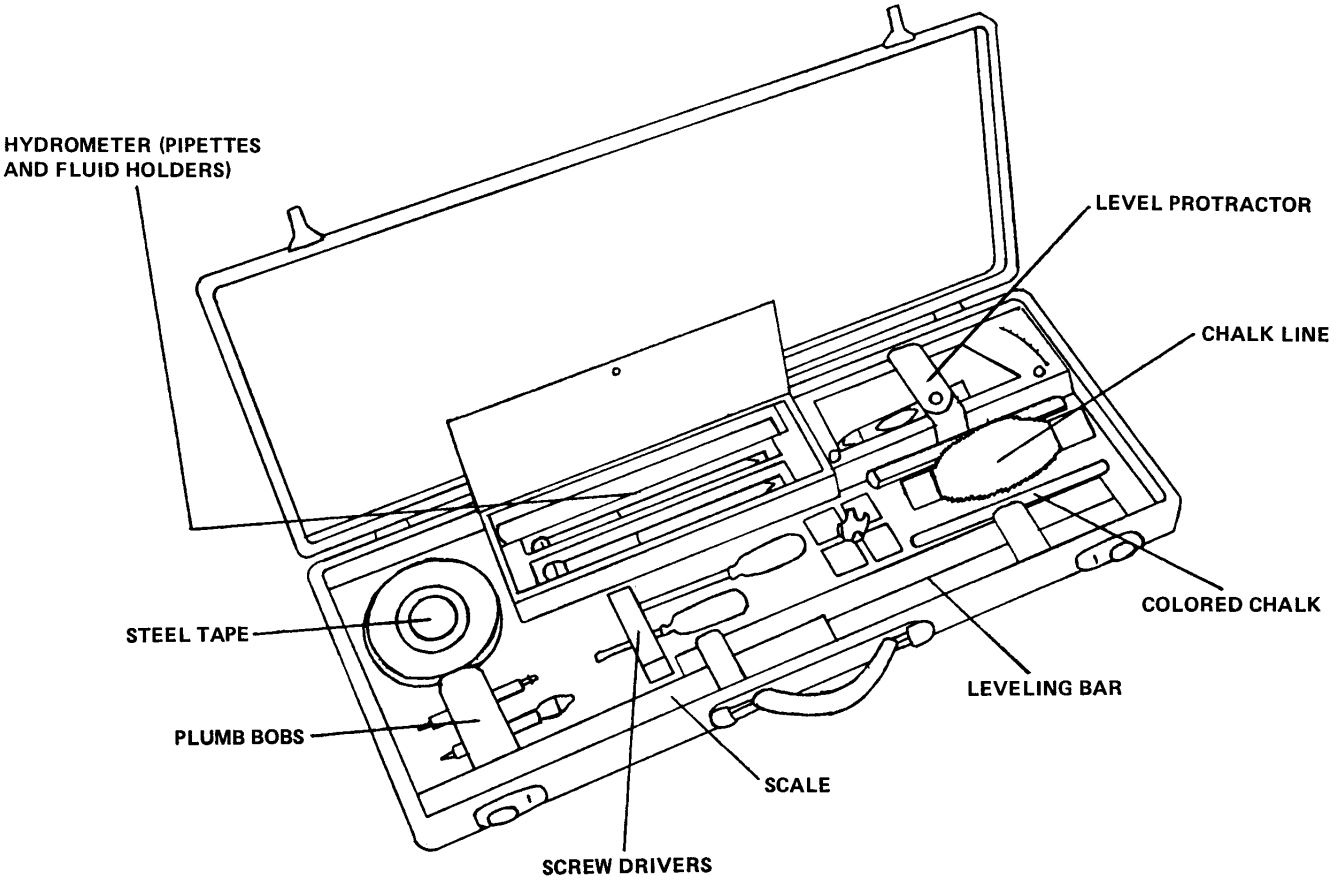

Figure 6–6. Accessory Weighing Kit

6–4.1.3. Aircraft with foam in their tanks pose special problems. If aircraft with foam in the fuel tanks are not fully filled prior to draining, fill the tanks to capacity and then drain to a trapped fuel condition in order to duplicate the trapped fuel values depicted in the TO. These aircraft always retain fuel in the foam, therefore, unless specific instructions are in the aircraft –5 series TO, draining should be terminated when fuel flow becomes discontinuous or starts to drip. For aircraft with or without foam, always drain fuel in accordance with the aircraft –5 or other applicable TO instructions. All aircraft

draining is generally done in the aircraft normal ground attitude. Although it is not recommended, if it is impractical to drain the fuel (usually because of fire hazards or local regulations), fill the tank to capacity. Since the density of the fuel varies with temperature and other factors, determine the actual density (weight per gallon) by using a hydrometer. Multiply the density by the gallons of fuel capacity obtained from the Chart E to determine the total fuel weight. Never use the Chart E fuel weight values. For the moment of the fuel, multiply the derived weight by the corresponding arm listed in the Chart E. Never weigh an aircraft with partially filled fuel tanks.

6–4.1.4. Remove load items such as bombs, ammunition, cargo, crew members, and equipment not having a fixed position in the aircraft. They are not listed as a part of the basic weight on the Chart A and, therefore, should not be in the aircraft when weighed.

6–4.1.5. Check all reservoirs and tanks for liquids such as drinking and washing water, engine oil, hydraulic fluid, anti–icing fluid, cooling fluids and liquid oxygen. Reservoirs and tanks should be empty or filled to normal capacity prior to weighing. Never weigh aircraft with partially filled reservoirs or tanks.

6–4.1.6. All waste tanks must be empty.

6–4.1.7. Move the aircraft to the area where it will be weighed. Do not set the aircraft brakes for this may induce side loads and thrust loads on the scales, which in turn may give erroneous weighing results.

NOTE

When using pit type scales or aircraft jacks and portable weighing equipment, the aircraft must be weighed in a closed hanger with no blowers or ventilating systems impinging on the aircraft. The slope of the floor shall not exceed 1/4 inch in one foot (1.2 degrees) unless scale TO exempts this requirement.

6–4.1.8. Conduct a Chart A inventory of equipment actually installed in the aircraft. This inventory will be done under the supervision of the weight and balance technician responsible for the aircraft.

NOTE

A basic weight without the associated inventory is of no value. Check the aircraft equipment against the Chart A and correct the chart as necessary to accurately itemize all items of fixed operating equipment that will be included in the basic weight determined by the weighing. The aircraft CHART A – BASIC WEIGHT CHECKLIST RECORD is absolutely necessary to properly accomplish this inventory. When the Chart A does not accompany the aircraft, it is the responsibility of the weight and balance supervisor or technician to prepare one before weighing. The compilation, completion, and application of the Chart A is described in Section V.

6–4.1.9. Correct the Chart C based upon the Chart A inventory.

6–4.1.10. Using such data as the current Chart C basic weight, the Chart A inventory, and the Chart E, calculate an as weighed weight. To the current basic weight, add the oil (if applicable) and items weighed but not part of the basic weight and subtract the items in the basic weight but not in the aircraft. See example Figure 6–7.

6–4.2. ACTUAL WEIGHING. The following describes the recommended procedure to successfully complete an actual aircraft weighing. Always refer to the aircraft –5 series TO and scale manufacturer's instructions for aircraft and scale specific instructions.

6–4.2.1. When weighing an aircraft with an electronic weighing kit and wing/fuselage jacks:

6–4.2.1.1. Position the aircraft in the hangar so the jacks will not straddle any cracks in the floor.

6–4.2.1.2. Level the aircraft by inflating or deflating the landing gear oleo struts. This is done to reduce load cell side loads and ultimately reduce work time.

VERIFICATION OF WEIGHING RESULTS EXAMPLE (REF Paragraph 6.4.1.10)

ITEM	WEIGHT (lbs)	MOMENT/1000 (in–lbs)
Current Basic Weight	24,916	10,841.9
Weighed but not in Basic Weight Variable Ballast	+176	+82.2
Weighed but not in Basic Weight Drainable Fuel	–12	– 5.1
Liquid Oxygen	– 3	– 1.2
Calculated As Weighed	25,077	10,917.8
Balance Arm (cg)	435.37 in	

Figure 6–7. Calculation of As Weighed Weight

6–4.2.1.3. Set up the scale and attach the load cells to the kit and the jacks (to choose the proper adapter see figure 6–2). Ensure the scale is within its calibration date.

6–4.2.1.4. Warm up the kit and make any entries required in accordance with scale TO.

6–4.2.1.5. Zero the scales.

6–4.2.1.6. Position the jacks directly below the jack pads.

6–4.2.1.7. Remove any chocks and release all brakes. This is done to reduce load cell side loads and ultimately reduce work time.

6–4.2.1.8. Jack the aircraft in accordance with aircraft jacking instructions. All jacks must be raised simultaneously.

NOTE

All hangar doors must be closed with no blower or ventilating systems impinging on the aircraft. Many scale manufacturers require exercising the scales before recording any weight values. To exercise the scales, lower the aircraft back to the ground and repeat steps 6–4.2.1.5 through 6–4.2.1.8.

6–4.2.1.9. Level the aircraft in accordance with –5 series TO instructions and paragraph 6–5.

6–4.2.1.10. Read the scales and make any required dimensional measurements in accordance with –5 series TO instructions and paragraph 6–6. Dimensions E and F are normally not measured when weighing on wing/fuselage jacks, but given in the aircraft CHART E LOADING DATA.

6–4.2.1.11. Make the applicable Form B entries and verify the weighing results (see paragraph 6–4.1.10. and 6–10). If a large discrepancy is noted, check to see where error could have occurred. If no error is found, reweigh the aircraft. Unless specified in the applicable aircraft –5 series TO, a large discrepancy is greater then 0.2 percent (0.4 percent for aircraft with a basic weight less than 35,000 pounds) of the basic weight or greater then 0.2 percent MAC (0.2 inches for rotorcraft).

NOTE

- In the above paragraph, 0.2% MAC is the difference between the calculated or anticipated cg and the as weighed cg. As an example, if the anticipated cg is 29.3% MAC, the permitted as weighed cg may be between 29.1% MAC and 29.5% (29.3% MAC +/– 0.2% MAC). If a discrepancy is noted, accomplish the following:

a. Check calculations for errors.

b. Check weighing preparations for errors; i.e. residual fuel or water, equipment, etc.

c. Check Chart C for errors.

d. Check scales for overdue calibration or scale malfunction in accordance with scale manufacturer's instructions.

- If no errors are found, reweigh the aircraft. If the reweigh weight is consistent with the first weight, enter on the Chart C the average values of the two weights. If the re–weigh is not consistent with the first weight, the aircraft should be weighed again. The two most consistent weights should be averaged and the average entered in the Chart C.

CAUTION

The landing gear struts may bind and suddenly release causing possible damage to the aircraft and load cells. Refer to applicable aircraft TOs.

6–4.2.1.12. Lower the aircraft and remove the jacks and load cells.

6–4.2.1.13. Determine the correction in accordance with 35 B2/3 series TO. If the scale correction factor is larger than the prescribed scale calibration accuracy, the scale should be repaired and the aircraft must be reweighed with a known serviceable scale. If the correction is within the prescribed limits, enter the data correction on the Form B.

6–4.2.1.14. Stow the equipment.

6–4.2.2. When weighing an aircraft with the electronic weighing kit with axle jacks (see figure 6–8):

6–4.2.2.1. Position the aircraft in the hangar so the jacks do not straddle any cracks in the floor.

6–4.2.2.2. Deflate the struts until they bottom out (see appropriate aircraft TO). Experience has shown that the load cell readings are not repeatable if the struts are not compressed.

6–4.2.2.3. Set up the scale, attach the load cells to the kit and jacks, and choose and attach the proper jack pad adapter (see figure 6–2). Ensure the scale is within its calibration date.

6–4.2.2.4. Warm up the kit and make the entries in accordance with the scale TO.

6–4.2.2.5. Zero the scales.

6–4.2.2.6. Position the jacks directly below the axles.

6–4.2.2.7. Remove any chocks and release all brakes. This is done to reduce load cell side loads ans ultimately reduce work time.

6–4.2.2.8. Jack the aircraft in accordance with aircraft jacking instructions. All jacks must be raised simultaneously to prevent side loads in the load cells.

NOTE

- All hangar doors must be closed with no blower or ventilating systems impinging on the aircraft.

- Many scale manufacturers require exercising the scales before recording any weight values. To exercise the scales, lower the aircraft back to the ground and repeat steps (6–4.2.2.5) through (6–4.2.2.8).

6–4.2.2.9. Level the aircraft in accordance with the –5 series TO instructions and paragraph 6–5.

6–4.2.2.10. Read the scales and make dimensional measurements in accordance with –5 series TO instructions and paragraph 6–6.

6–4.2.2.11. Make the applicable Form B entries and verify the weighing results (see paragraphs 6–4.1.10 and 6–10). If a large discrepancy is noted, check to see where the error could have occurred. If no error is found, reweigh the aircraft. Unless specified in the applicable aircraft –5 series TO, a large discrepancy is greater then 0.2 percent (0.4 percent for aircraft with a basic weight less than 35,000 pounds) of the basic weight or greater then 0.2 percent MAC (0.2 inches for rotorcraft).

NOTE

- In the above paragraph, 0.2% MAC is the difference between the calculated or anticipated cg and the as weighed cg. As an example, if the anticipated cg is 29.3% MAC, the permitted as weighed cg may be between 29.1% MAC and 29.5% (29.3% MAC +/– 0.2% MAC). If a discrepancy is noted, accomplish the following:

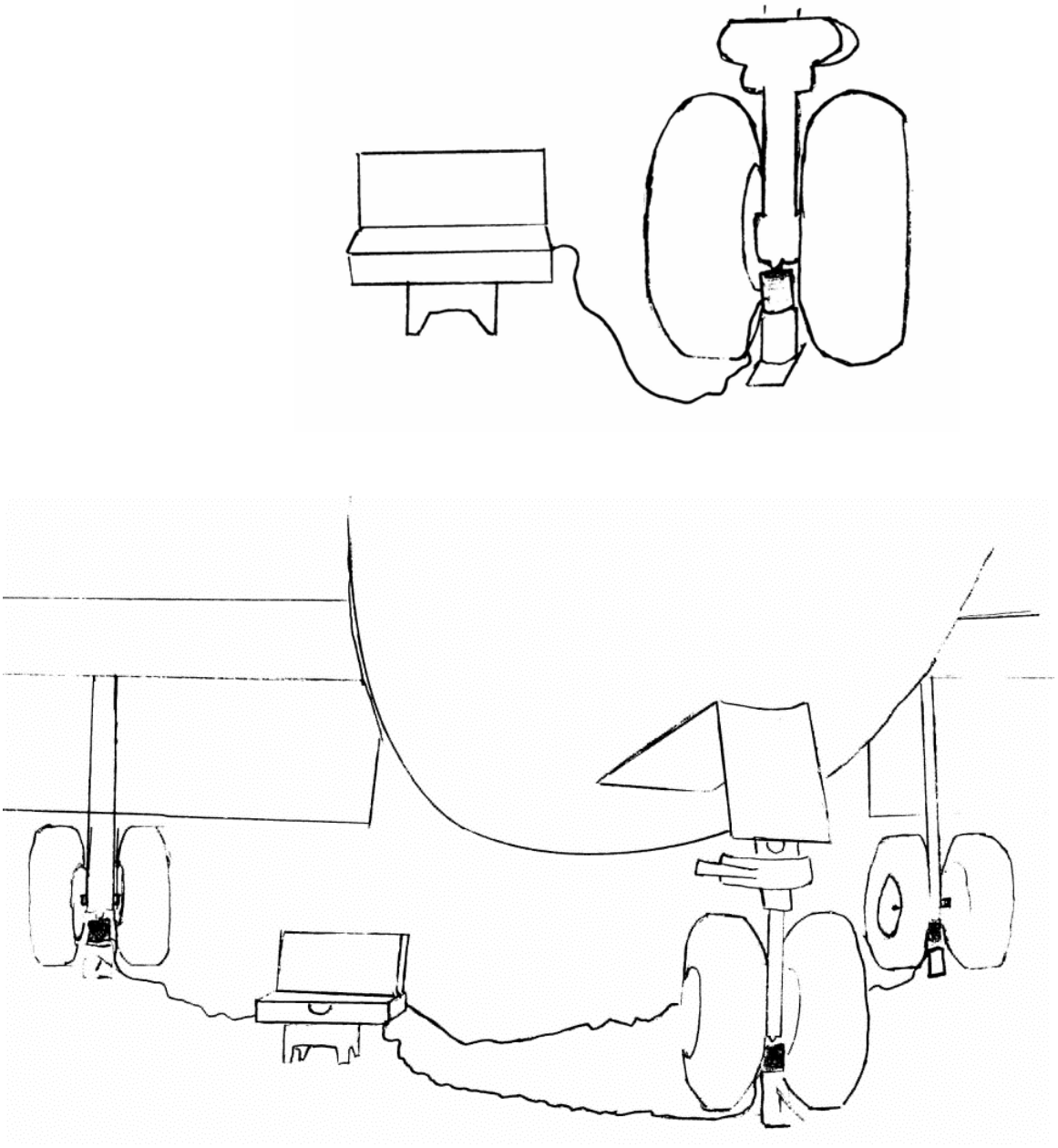

Figure 6–8. Electronic Weighing Kit with Axle Jacks

a. Check calculations for errors.

b. Check weighing preparations for errors; i.e. residual fuel or water, equipment, etc.

c. Check Chart C for errors.

d. Check scales for overdue calibration or scale malfunction in accordance with scale manufacturer's instructions.

- If no errors are found, reweigh the aircraft. If the re–weigh weight is consistent with the first weight, enter on the Chart C the average values of the two weights. If the reweigh is not consistent with the first weight, the aircraft should be weighed again. The two most consistent weights should be averaged and the average entered in the Chart C.

6–4.2.2.12. Lower the aircraft and remove the jacks and load cells from the aircraft.

6–4.2.2.13. Determine the correction in accordance with 35B2/3 series TO. If the scale correction factor is larger than the prescribed scale calibration accuracy, the scale should be repaired. Enter the data correction on the Form B.

6–4.2.2.14. Stow the equipment.

6–4.2.3. When weighing an aircraft with platform scales (see figure 6–3) or stationary scales (see figure 6–4):

6–4.2.3.1. Ensure all the scales are within their calibration date. If the scales are portable, set up the scales in accordance with the scale TO. Attach the platform to the readout.

6–4.2.3.2. Warm up electronic scales.

6–4.2.3.3. Zero the scales.

6–4.2.3.4. Tow the aircraft onto the scales. Do not apply the aircraft brakes because they may bind the scales and require re–zeroing of the scales.

NOTE

Many scale manufacturers require exercising the scales before recording any weight values. To exercise the scales, remove the aircraft from the scales and repeat steps (6–4.2.3.2) through (6–4.2.3.4).

6–4.2.3.5. Level aircraft in accordance with the –5 series TO instructions and paragraph 6–5.

6–4.2.3.6. Read the scales and make dimensional measurements in accordance with the –5 series TO instructions and paragraph 6–6.

6–4.2.3.7. Make the applicable Form B entries and verify the weighing results (see paragraph 6–4.1.10. and 6–10). If a large discrepancy is noted, check to see where the error could have occurred. If no error is found, reweigh aircraft. Unless specified in the applicable aircraft –5 series TO, a large discrepancy is greater then 0.2 percent (0.4 percent for aircraft with basic weight less than 35,000 pounds) of the basic weight or greater then 0.2 percent MAC (0.2 inches for rotorcraft).

NOTE

- In the above paragraph, 0.2% MAC is the difference between the calculated or anticipated cg and the as weighed cg. As an example, if the anticipated cg is 29.3% MAC, the permitted as weighed cg may be between 29.1% MAC and 29.5% (29.3% MAC +/– 0.2% MAC). If a discrepancy is noted, accomplish the following:

a. Check calculations for errors.

b. Check weighing preparations for errors; i.e. residual fuel or water, equipment, etc.

c. Check Chart C for errors.

d. Check scales for overdue calibration or scale malfunction in accordance with scale manufacturer's instructions.

- If no errors are found, reweigh the aircraft. If the reweigh weight is consistent with the first weight, enter on the Chart C the average values of the two weights. If the reweigh is not consistent with the first weight, the aircraft should be weighed again. The two most consistent weights should be averaged and the average entered in the Chart C.

6–4.2.3.8. Remove the aircraft from the scales.

6–4.2.3.9. Determine the correction in accordance with the appropriate TO or scale instructions. If the scale correction factor is larger then the scale calibrated accuracy, the scale should be repaired and the aircraft must be reweighed with a known serviceable scale. If the correction is within the prescribed limits, enter the data correction on the Form B.

6–4.2.3.10. Stow the equipment.

6–5. AIRCRAFT LEVELING. All weight and balance computations are based on measurements taken when the aircraft is in a level position. This position is when the longitudinal and lateral axes of the aircraft are in a horizontal plane or level. Leveling aids have been accurately installed in the aircraft by the manufacturer, and with the proper use of these aids, it can be determined when the aircraft is level. Aircraft may be leveled with spirit levels, inclinometer, digital protractor or plumb bob.

6–5.1. SPIRIT LEVELS, INCLINOMETER or DIGITAL PROTRACTOR. Leveling lugs may be located on the inside or outside of the aircraft (see figures 6–9 and 6–10). When the lugs are located inside the aircraft, it is often necessary for the personnel observing the level to remain in the aircraft while it is being weighed to avoid disturbing its equilibrium. In this case, the weight and moment of the observer must be subtracted from the total weight and moment. To use the leveling lugs, place the leveling bar squarely on the lugs. Then place the leveling device on the leveling bar. The aircraft must be leveled both longitudinally and laterally.

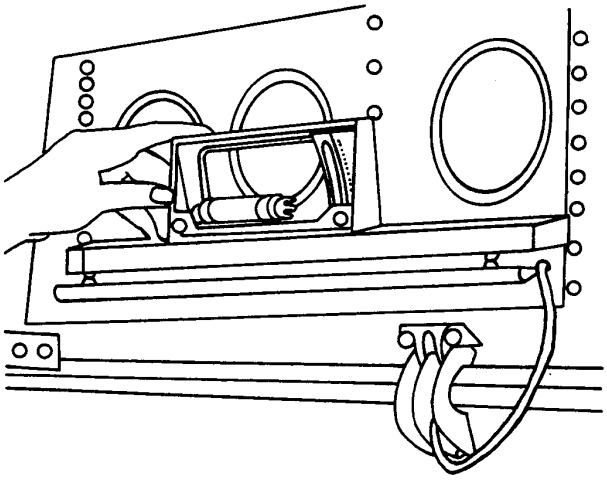

Figure 6–9. Leveling Lugs Inside Aircraft

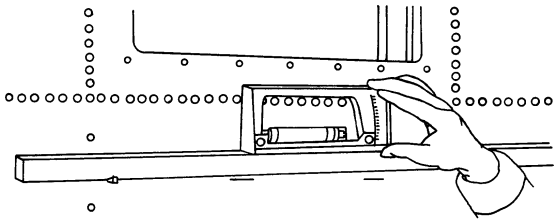

Figure 6–10. Leveling Lugs Outside Aircraft

6–5.2. PLUMB BOB (see figure 6–11). Another device provided for leveling of aircraft is a plumb bob. The primary advantage of this type leveling over the spirit level type is that it is more accurate whenever the drop length is greater than the standard leveling lug span. To level an aircraft by using a plumb bob, suspend the plumb bob from the upper bracket. Then jack the aircraft so the point of the plumb bob is just above the intersection of the cross lines on the lower index plate. The aircraft will then be level laterally and longitudinally.

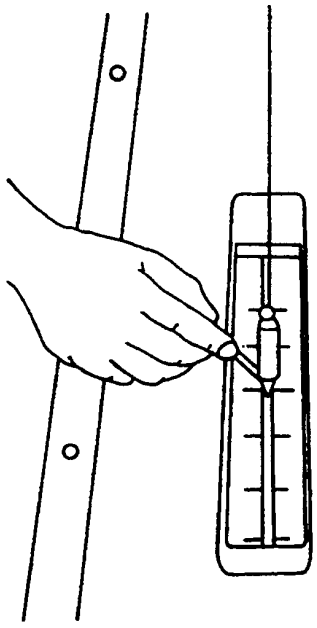

Figure 6–11. Plumb Bob Leveling

6–6. DIMENSIONS REQUIRED FOR CG LOCATION. Three horizontal dimensions must be either measured or known to determine the horizontal location of the as weighed aircraft cg. They are:

6–6.1. The distance from the reference datum to some known point (preferably a jig point) which is always listed on the aircraft diagram contained in the applicable –5 series TO.

6–6.2. The distance from the jig point to a chalk line drawn between the main reaction points.

6–6.3. The distance between the main and nose or tail reaction points.

6–7. PROJECTION OF POINTS TO THE FLOOR. Horizontal dimensions are best determined by projecting the points to be measured onto the hangar floor. Reaction points may then be accurately located on the hangar floor by measuring from the projected points.

6–7.1. PROJECTION OF THE REFERENCE POINT. Suspend a plumb bob from the center of the jig point, keeping the plumb bob approximately 1/8 inch above the floor. Dampen out the swing of the plumb bob and make a cross mark on the floor directly under the tip of the plumb bob. A piece of masking tape may be placed on the floor upon which the cross mark can be marked. Print the words jig point on the floor, near the cross, to distinguish it from the other reaction points.

6–7.2. PROJECTION OF THE CENTER POINT OF THE MAIN REACTIONS. Suspend a plumb bob from the center of each main reaction point to the floor, as described above. It is necessary that a free fall be obtained for the plumb bob, so interference by jacks must be avoided. Ensure the plumb bob is dropped from the exact center of each reaction point. If weighing on platform scales, drop the plumb bob from the center of the axle. After the marks are placed directly under the main reaction points, a chalked line is stretched between these two points and drawn taut. The line is then snapped to the floor, leaving a straight chalk line between the main reaction points.

6–7.3. PROJECTION OF NOSE OR TAIL REACTION. The nose or tail reaction point is projected to the hangar floor in the same manner as described above. Ensure the plumb bob is dropped from the exact center of each reaction point. If weighing on platform scales, drop the plumb bob from the center of the axle. This projection is then marked on the floor with a small cross. Interference by jacks or platforms must be avoided.

6–8. TAKING MEASUREMENTS. All measurements should be taken with a steel tape. Two of the measurements to be taken are listed as B and D on the AIRCRAFT WEIGHING RECORD. Distance B is the perpendicular distance from the projected jig point to the chalk line between the main reaction points. Distance D is the distance from the centerline of the main reactions to the nose or tail reaction point. When measuring these distances, the tape must be parallel to the centerline of the aircraft. These measurements must be made accurately to a tenth of an inch or better to ensure accurate results in the computations, which determine the as–weighed cg location of the aircraft. Measurements taken from the main reaction points must be measured perpendicular to the chalk line joining the two points. These measurements may be determined quickly and accurately by placing the zero end of the tape on the desired point and swinging the other end of the tape across the main reaction chalk line in a small arc. The shortest distance read off the tape where the tape crosses the chalk line is the perpendicular distance from the point to the line. Care must be taken to ensure the tape is clear of any obstacles, and is taut and straight when taking measurements.

6–9. RECORDING WEIGHT AND DIMENSIONS. All scale readings and dimensions should be recorded immediately on the AIRCRAFT WEIGHING RECORD. Only the distances B and D need actually be measured. Distance I (measured from the reference datum to the jig point) is obtained from the aircraft CHART E LOADING DATA.

6–10. VERIFICATION OF WEIGHING RESULTS. If data for comparison is available, an attempt must be made to verify the data obtained from each weighing. Verification may be made by comparing the calculated as weighed weight and cg (6.4.1.10) to the actual as weighed weight and cg. If no comparison is available, the aircraft will be weighed three times and the average weight and moment will be used on the Form B with an appropriate note made to this effect in the remarks block.

NOTE

When using stationary beam balance pit scales, the beam balance may be upset in lieu of removing the aircraft from the scales.

SECTION VII
CENTER OF GRAVITY (CG) LOADING CALCULATIONS

7–1. PURPOSE. The purpose of this section is to describe the principles and calculations involved in (1) calculating the most forward and aft cg conditions for a particular aircraft mission (entered on the Form F for some aircraft) and (2) determining appropriate methods of correction for a mission whose cg is found to be outside the allowable limits. This section deals primarily with Chart E weight, arm, and moment calculations. When load adjusters are used, refer to Section X.

7–2. LATERAL CG AND VERTICAL CG. Lateral cg and vertical cg, not controlled on most aircraft, are critical with some and restricted to limits of operation just as the longitudinal cg. Rotorcraft balance control often involves tracking both the longitudinal cg and lateral cg, and clearance for the F–111 is dependent upon the longitudinal, lateral, and vertical cg of the crew module. Such aircraft are exceptions, and although the principles in the next paragraph basically apply to lateral and vertical balance as well as longitudinal, the calculations which follow are intended for use in longitudinal cg derivations only. The extra weight and balance maintenance and control necessary for lateral and/or vertical cg calculations are called out in the applicable –5 series TO.

7–3. LOADING PRINCIPLES. The following principles are derived from the more general balance principles described in Section III. They show both the effects of loading on an aircraft cg and methods of correcting unfavorable loading conditions:

7–3.1. The distance of an item from the aircraft cg, not the distance from the reference datum, determines the effect of the items' weight on the aircraft cg.

7–3.2. With a given item weight, the aircraft cg shift caused by moving the item is directly related to the distance the item is moved.

7–3.3. Any weight added forward of the aircraft cg would move the cg forward. Conversely, any weight added aft of the cg would move the cg aft.

7–3.4. Any weight removed forward of the aircraft cg would move the cg aft. Conversely, any weight removed aft of the cg would move the cg forward.

7–3.5. Any weight moved forward would move the aircraft cg forward and any weight moved aft would move the cg aft.

7–3.6. A small weight moved a long distance can have as much effect on the aircraft cg as a large weight moved a short distance.

7–4. CHART E LOADING DATA. The Chart E provides all the weight, arm, and moment data necessary to perform cg loading calculations. It is predominantly in tabular form, listing the standard weights, arms, and moments of load items in such quantities and locations as are normally used.

NOTE

The weights listed in the Chart E are standard weights. Actual weights should be used whenever possible, especially when dealing with variable weights such as the fuel (density varying with temperature) and the crew.

7–5. MOST FORWARD AND MOST AFT CG CALCULATIONS. These calculations are designed to determine the most forward and most aft cg locations that could normally occur during the mission under consideration. Each computed cg should be carried to at least one decimal place and checked against the allowable limits. As the gross weight changes due to fuel use, expended ammo, and the release of expendable stores, the allowable cg limits may change. If the cg exceeds the limits, note it in the calculations but do not begin correction until all the cg calculations are completed. Then make the necessary corrections and run through cg calculations again to check the corrected condition. The following calculations deal specifically with Chart E data. The principles described also apply to calculations using a load adjuster; however, clearer calculating procedures for most forward and most aft cg calculations using load adjusters are included in Section X.

7–5.1. TAKEOFF GROSS WEIGHT CONDITION. Prior to any mission cg calculations, a TAKEOFF CONDITION must be determined. This is done by adding the various loading data weights and moments to the current Chart C basic weight and moment and computing the takeoff gross weight cg.

7–5.2. LANDING GEAR EXTENSIONS. Unless specifically stated in the –5 series TO, the TAKEOFF CONDITION is determined with the landing gear up. The lowering or extension of the landing gear causes an aircraft cg shift due to a moment change listed in the Chart E. Add this moment with the takeoff gross weight moment to get a gear–down

condition moment, and compute the cg. If the cg moves aft, the gear–down condition is the aft cg condition, while the gear–up is the forward cg condition. If it moves forward, then the reverse is true. If there was no apparent cg shift, then the gear–up condition is both the forward and aft cg conditions.

7–5.3. FUEL USE. Delete from the forward and aft cg conditions the weight and moment for the usable fuel. The new weights and moments represent the forward and aft cg zero fuel conditions. Add to these conditions the partial fuel quantities (taken from the Chart E fuel tables) which cause the most forward and aft cg shifts. These quantities may not be explicitly called out, but must be found by trial and error. However, these quantities will remain approximately the same for all missions. These calculations result in the forward and aft cg fuel use conditions. Compute the forward and aft cg.

NOTE

- The fuel quantity whose own cg is the most forward or most aft is not necessarily the quantity which will cause the most extreme aircraft cg condition. The aircraft cg movement is dependent on the weight of the fuel as well as its cg location.

- When fuel tables reflecting the effects of different aircraft attitudes (angles of attack) on the fuel cg are listed in the Chart E, these tables must be evaluated along with the standard level–flight fuel tables to determine the forward and aft cg fuel use conditions.

7–5.4. EXPENDED AMMO. The cg movement caused by ammo used must be considered. Subtract the weight and moment of the rounds carried from the two conditions derived in the previous paragraph and add the weight and moment of the cases, if retained. Compute the new conditions' cg and determine the direction of the cg shift. If the ammo used causes an aft cg shift when applied to the aft cg condition, the ammo used condition is the new aft cg condition. If the ammo used causes a forward cg shift when applied to the forward cg condition the ammo used condition is the new forward cg condition. If it causes a forward cg shift to the aft cg condition or an aft cg shift to the forward cg condition, the forward and aft cg conditions remain as before. If there is no apparent cg shift when applied to the forward (or aft) cg condition, then the ammo used is not required for consideration of forward and aft cg calculations.

7–5.5. EXPENDING STORES. The calculations to determine the cg effect of the release of stores involves a number of computations covering each step of the prescribed release sequence. If no sequence is prescribed in the aircraft –5 series TO, the sequences which cause the most forward and aft cg movement must be determined and their effects calculated.

7–5.6. PERSONNEL MOVEMENT. In most cargo, transport, and similar aircraft, personnel (crew/troops/passengers) have the freedom to move about inside the aircraft at times during the flight. This movement can have considerable effect on the aircraft cg and should be evaluated. Included in the Chart E are tables which list moment changes resulting from the movement of standard weight personnel from one aircraft compartment to another. These moments are positive, or added, when the personnel movement is aft, while they are negative, or subtracted, when the movement is forward.

7–5.7. CORRECTIONS. Corrections must be made if the calculated forward and/or aft cg falls outside the allowable cg limits. Some aircraft are equipped to carry variable ballast, which can be used to bring the cg within limits. In cargo, tanker, and transport aircraft, the cg can be shifted through the relocation of cargo, fuel and personnel. The use of alternate fuel and expendable stores sequences can also be used to negate some of the adverse effects of fuel use and store release. However, whenever corrections are made, the mission calculations must be modified and checked so that cg limits are not exceeded in other parts of the mission profile.

7–5.8. SHIFT EQUATION. When the cg of a loaded aircraft does not lie within the prescribed limits, and certain load items can be moved about, the cg may possibly be corrected by shifting weight from one compartment or position to another. The following equation can be used to determine how much weight to shift how far:

$$W \times D = TW \times CGch$$

W is the shifted weight, in pounds. D is the distance in inches the weight W is shifted. TW, in pounds, is the total aircraft weight. CGch is the number of inches that the aircraft cg changes due to the shifted weight. This equation can be rearranged to simplify its application into the following equations.

7–5.8.1. TO find how much weight need be shifted a known distance D to attain the desired cg change (CGch):

$$W = \frac{CGch \times TW}{D}$$

7–5.8.2. To find the distance a known weight W must be shifted to attain the desired cg change (CGch):

$$D = \frac{CGch \times TW}{W}$$

7–5.8.3. To find the cg change caused by shifting a known weight a known distance:

$$CGch = \frac{W \times D}{TW}$$

7–5.9. BALLAST EQUATION. If weight cannot be shifted to correct a cg outside its limit, the load must either be changed or, ballast may be added.

NOTE

> It is the responsibility of the weight and balance technician to determine the proper amounts of ballast required to maintain the aircraft within the prescribed cg limits throughout its flight.

If ballast must be used to move the aircraft cg within its limits, the following equation may be used to determine how much ballast must be added to what location.

$$GW\ (CGgw–X) = Wb\ (X–CGb)$$

GW is the gross weight in pounds of the aircraft before ballast is added. CGgw is the cg in inches of the aircraft without ballast. X is the desired aircraft cg in inches. Wb is the weight in pounds of the added ballast. CGb is the ballast cg in inches. This equation can be rearranged to simplify its application into the following equations:

7–5.9.1. To find the necessary weight of ballast to be added at a specific location CGb:

$$Wb = \frac{GW\ (CGgw–X)}{X–CGb}$$

7–5.9.2. To find the location where a given ballast Wb must be place to move the aircraft cg to a desired location:

$$CGb = X + \frac{GW\ (X–CGgw)}{Wb}$$

7–6. SAMPLE. This sample deals with an FX–1 air superiority configured aircraft. It is armed with four AIM–9J missiles and full ammo, and also carries chaff and flares. The basic weight from the Chart C is 15,023 pounds with a moment of 49,208 inch–pounds/100. The forward cg limit is 19.6 percent MAC up to 21,000 pounds, and then increases linearly to 31.2 percent MAC at 33,000 pounds for in–flight and 32.5 percent MAC at 33,000 pounds for takeoff and landing. The aft cg limit is constant at 39.5 percent MAC. The MAC and leading edge of the MAC (LEMAC) are 135.84 and 273.11 inches, respectively. Percent MAC is defined as:

$$\text{Percent MAC} = \frac{(\text{Balance Arm–LEMAC})}{\text{MAC}} \times 100$$

7–6.1. The TAKEOFF CONDITION is derived as follows:

	Weight	Mom/100
BASIC WEIGHT	15,047	49,298
PLUS:		
Crew	215	296
Ammo (retained)	130	331
Ammo (expendable)	157	400
Full Fuel	7,294	23,166
Msl Adpter @ BL 157	51	192
Launcher @ BL 157	139	493
AIM–9 @ BL 180	338	1,227
AIM–9 @ BL 157	338	1,194
Chaff/Flares	24	110
TAKEOFF CONDITION	23,733	76,707
CG		323.21 inches

$$\%\ MAC = \frac{(322.55 – 273.11)}{135.84} \times 100 = 36.39$$

7–6.2. The LANDING CONDITION is defined as minus all expendable stores and with 1261 pounds of fuel remaining:

	Weight	Mom/100
TAKEOFF CONDITION	23,733	76,707
MINUS:		
AIM–9 @ BL 157	– 338	– 1,194
AIM–9 @ BL 180	– 338	– 1,227
Ammo (expendable)	– 157	– 400
Full Fuel	– 7,294	– 23,166
PLUS:		
1261 lbs fuel	1,261	4,033
LANDING CONDITION	16,867	54,753
CG	324.62 inches	

$$\% \text{ MAC} = \frac{(324.57 - 273.11)}{135.84} \times 100 = 37.92$$

7–6.3. The takeoff cg and landing cg are thus within the allowable limits.

7–6.4. The next step is to make the calculations described for the most forward and aft cg.

7–6.4.1. The landing gear retraction is defined in the Chart E as causing a minus 15,700 inch–pound moment change. Thus, the aft cg condition remains at the takeoff condition, while the forward cg condition becomes:

	Weight	Mom/100
TAKEOFF CONDITION	23,733	76,707
Landing Gear Retract	0	– 157
FORWARD CG CONDITION	23,733	76,550
CG	322.55 inches	

$$\% \text{ MAC} = \frac{(322.55 - 273.11)}{135.84} \times 100 = 36.39$$

7–6.4.2. The fuel condition which will produce the most aft cg shift is determined to be 1975 pounds and 6494 inch–pounds/100.

	Weight	Mom/100
AFT CG CONDITION	23,733	76,707
MINUS:		
Full Fuel	– 7,294	– 23,166
PLUS:		
1975 lbs Fuel	+ 1,975	+ 6,494
NEW AFT CG CONDITION	18,414	60,035
CG	326.03 inches	

$$\% \text{ MAC} = \frac{(326.03 - 273.11)}{135.84} \times 100 = 38.96$$

The most forward cg shift is caused by 5829 pounds and 18,143 inch–pounds/100 of fuel. However, the cg of this fuel quantity is at 311.25 inches (28.08 percent MAC) which is within the allowable forward cg limit at 21,383 pounds. If the aircraft cg would exceed the forward limit without fuel, the addition of this quantity of fuel could cause the aircraft cg to shift aft to within the forward limit. Therefore, a zero fuel gross weight will be used to compute a forward cg location. If the forward cg location is aft of 311.25 inches, the 5829 pounds of fuel will be included.

	Weight	Mom/100
FORWARD CG CONDITION	23,733	76,550
MINUS:		
Full Fuel	– 7,294	– 23,166
NEW FORWARD CG CONDITION	16,439	53,384
CG	324.74 inches	

$$\% \text{ MAC} = \frac{(324.74 - 273.11)}{135.84} \times 100 = 38.01$$

7–6.4.3. The expendable ammo is located forward of the forward cg limits, so the forward cg condition remains with full ammo as in previous paragraph. The new aft cg condition is derived to reflect ammo used (the FX–1 retains ammo cases):

	Weight	Mom/100
AFT CG CONDITION	18,414	60,035
MINUS:		
Ammo (expendable)	– 157	– 400
NEW AFT CG CONDITION	18,257	59,635
CG	326.64 inches	

$$\% \text{ MAC} = \frac{(326.64 - 273.11)}{135.84} \times 100 = 39.41$$

7–6.4.4. The four AIM–9 missiles are located aft of the aft cg limit, so their firing causes a forward cg shift. The new forward cg condition then becomes:

	Weight	Mom/100
FORWARD CG CONDITION	16,439	53,384
MINUS:		
AIM–9 (4)	– 676	– 2,421
NEW FORWARD CG CONDITION	15,763	50,963
CG	323.31 inches	

$$\% \text{ MAC} = \frac{(323.31 - 273.11)}{135.84} \times 100 = 36.96$$

The aft cg condition remains with the four missiles as before.

7–6.4.5. Since the forward cg condition will not now exceed the forward limit, the 5829 pounds of fuel should be added to give a true forward cg condition:

	Weight	Mom/100
FORWARD CG CONDITION	15,763	50,963
PLUS:		
5829 lbs Fuel	+ 5,829	+ 18,143
NEW FORWARD CG CONDITION	21,592	69,106
CG	320.05 inches	

$$\% \text{ MAC} = \frac{(320.05 - 273.11)}{135.84} \times 100 = 34.56$$

7–6.5. Thus, both the forward cg and aft cg are within the allowable limits. However, suppose the pilot weighed in at 185 pounds, instead of 215. That would mean a 30 pound weight reduction, and a 4100 inch–pound moment reduction from what was calculated. With the pilot being forward of the MAC, the cg shift would be aft. The new aft cg condition would then be:

	Weight	Mom/100
AFT CG CONDITION	18,257	59,635
MINUS:		
Crew Weight Reduction	– 30	– 41
NEW AFT CG CONDITION	18,227	59,594
CG	326.95 inches	

$$\% \text{ MAC} = \frac{(326.95 - 273.11)}{135.84} \times 100 = 39.63$$

This is 0.13 percent MAC aft of the allowable aft cg limit. Thus, the calculations could have been performed and clearance given to the flight using the standard pilot weight, but because of the lighter weight pilot, the aircraft cg could have gone aft of the aft limit in flight.

SECTION VIII
AUTOMATED WEIGHT AND BALANCE SYSTEM (AWBS)

8–1. PURPOSE. The purpose of this section is to discuss and provide information about the Automated Weight and Balance System (AWBS).

8–2. INTRODUCTION. The AWBS (CPIN 88Z–AWBS/DD365/PCSSE–F001–00A) is a computer program used to maintain weight and balance records for both fixed and rotary wing aircraft. It accomplishes this by utilizing a desktop computer to accomplish various calculations and fill in the necessary weight and balance charts and forms dealing with aircraft weight and balance.

8–2.1. Aircraft weight and balance data are stored on magnetic media and may be updated via the computer thus achieving two main objectives: reducing mathematical errors and increasing efficiency.

8–2.2. The system is designed to support all U.S. military services and government agencies. AWBS (CPIN 88Z–AWBS/DD365/PCSSE–F001–00A) has been approved by ASC/ENFS as the standard automated weight and balance computer program to be used by U.S. Government agencies and their contractors The AWBS will be made available to foreign government and contractors provided they comply with the procedures as stated at the end of this section. The printouts of the program are authorized in lieu of the DD 365 Personnel Record, DD 365–1 Chart A, DD 365–2 Form B, DD 365–3 Chart C, and the DD 365–4 Form F. Only the latest version of AWBS is authorized for use. Once an update has been released, users have 90 days to install/upgrade to the latest version of AWBS. All older versions will become obselete on 30 June 2003 and will no longer be valid for use. To see what the latest version and release dates are, check any of the following websites:
https://www.en.wpafb.af.mil/weight/topics_interest.asp or http://engineering.wpafb.af.mil/weight/weight.asp or https://awbs.hill.af.mil/ .

8–2.3. The following is a general guide for the AWBS. A more detailed explanation can be found in the program's help menu. The program is designed with online help to guide you through all aspects of the program.

NOTE

It is recommended that personnel using this program first attend a Basic Windows training course.

8–2.4. The AWBS shall not be duplicated or given to other units.

8–3. BASIC CONCEPTS. AWBS functions almost identically to the manual method of performing aircraft weight and balance.

8–3.1. The printed forms it produces were designed to be as similar to their DD Form 365 series counterparts as possible without compromising the benefits of being automated. They are designed to be on regular 8 ½ inch x 11 inch bond paper and to replace the usage of DD Forms 365, 365–1, 365–2, 365–3 and 365–4.

8–3.2. AWBS is MDS and serial number driven. This means that at any time during your usage of AWBS, it will only concern itself with the MDS and serial number that it is currently selected.

8–3.3. AWBS will not replace the Weight and Balance Handbook, nor will it or should it replace the user's knowledge of performing aircraft weight and balance. It is simply a tool to perform weight and balance tasks more efficiently and accurately.

NOTE

Use of AWBS does not relieve the Weight and Balance Technician of responsibility for determining safe weight and balance conditions.

8–4. SYSTEM REQUIREMENTS. Before you install AWBS, make sure that your computer meets the minimum requirements. To run AWBS, you must have certain hardware and software installed on your computer.

8–4.1. Minimum Required System:

- Pentium Processor.
- Microsoft ® Windows 95.
- RAM: 32MB.
- A CD ROM drive.
- Monitor: 800 x 600 minimum resolution.

8–4.2. Peripherals:

- Microsoft Compatible Mouse.

- Windows compatible printer (Laser printer is highly recommended).

8–5. INSTALLATION PROCEDURES. The Setup program installs AWBS, the Help system and other required components from the distribution media to your hard disk.

NOTE

You cannot simply copy files from the distribution disks to your hard disk and run AWBS. You MUST use the Setup program, which decompresses and installs several files in the appropriate directories.

8–5.1. To set up AWBS :

a. Insert the AWBS CD–ROM into your CD–ROM drive. AWBS installation should begin automatically.

b. If setup does not automatically start, click on the Start button

c. Click Run, then Browse to the setup.exe on the CD–ROM.

d. Select setup.exe, then click Open from the Browse dialog, then click OK on the Run dialog to begin installation.

8–6. VERSION COMPATIBILITY. Knowing what version of AWBS you are using is important. There may be instances where you might receive a disk for an aircraft utilizing version 6.0 or 7.0a. The latest version of the AWBS will import 6.0 files. Once 6.0 files are imported, they cannot be exported in AWBS 6.0 format. Because there are major differences between various versions, some information may not be converted. Version 7.0a databases can also be converted into the latest version using the conversion utility. When converting 7.0a to the latest version, all data will be converted. Once you have imported or converted your data into the latest version of the AWBS, you will not be able to convert back to an earlier version. Please review all data for accuracy after completing the conversion.

8–7. GENERAL GUIDELINES. Documentation and instructions of the program may be found in the program on–line help section delivered with the software. They can also be found in the Weight and Balance AWBS and AWBS Form F folders and at: https://awbs.hill.af.mil. The new weight and Balance Software Website is ready for use by DOD and it's authorized contractors. This website contains the latest information on the AWBS.

8–8. DISTRIBUTION OF THE AWBS. The AWBS may be obtained as follows:

8–8.1. MILITARY ORGANIZATION DISTRIBUTION. United States Military organizations can order the AWBS through the organizations TODO (Technical Order Distribution Office) using Computer Program Identification Number (CPIN) 88Z–AWBS/DD365/PCSSE–F001–00A.

8–8.2. DOD CONTRACTOR DISTRIBUTION. DOD Contractors may request the program by sending a letter to the address below. The letter of request shall include the requester's name, mailing address (Organization, Street Address, City, State, Zip Code with 4 digit extension and Country), and phone number. In addition, the requester will be required to fill out a STATEMENT OF TERMS AND CONDITIONS FOR AIR FORCE SOFTWARE prior to release of the AWBS. The statement will be sent out by ASC/ENFS.

8–8.3. FOREIGN GOVERNMENTS AND FOREIGN CONTRACTOR DISTRIBUTION. Foreign governments and foreign contractors may request the program by sending a letter through the country's embassy to the address below. The letter of request shall include the requester's name, mailing address (Organization, Street Address, City, State, Zip Code with 4 digit extension and Country), and phone number. In addition, the requester will be required to fill out a STATEMENT OF TERMS AND CONDITIONS FOR AIR FORCE SOFTWARE prior to release of the AWBS. The statement will be sent out by ASC/ENFS.

8–8.4. MAILING ADDRESS:

ATTN:
AUTOMATED WEIGHT AND BALANCE SYSTEM
ASC/ENFS
2530 LOOP ROAD WEST
WRIGHT PATTERSON AFB, OH 45433–7101

8–8.5. DOD AND DOD AUTHORIZED CONTRACTORS. The new Weight and Balance Software Website is ready for use by DOD and it's authorized contractors. This website contains the latest information on the AWBS. It contains technical support, training resources, Frequently Asked Questions (FAQ) and software downloads. Once registered, you will be notified via e–mail of new software releases, technical interchange meetings, and conferences. New software releases will be available on the website for immediate download. This site is the first place a user should visit when experiencing difficulties with any of our weight and balance software packages. You can post questions to the site and have them answered directly by the weight and balance software developement team. This site provides a readily available resource 24 hours a day.

SECTION IX
FORM F WEIGHT AND BALANCE COMPUTERS (FORM F GENERATORS)

9–1. PURPOSE. The purpose of this section is to discuss and provide requirements for computer programs that generate weight and balance data intended for use in completing the Form F for a single MDS of aircraft such as a KC–135, F–16, or VC–25 (Example is shown in Figure 9–1). The Form F weight and balance computer is developed to enable the pilot, crew chief, or loading personnel to (1) direct the load and (2) control the weight and cg of a particular model aircraft. Through the computer, one can rapidly and accurately determine if the weight and cg are within the loading range for any loading condition; the loading for any desired cg location; the effects of any weight or location changes for such items as crew, fuel and cargo during flight and what steps would be necessary to keep the aircraft within the safe loading range. A weight and balance computer is sometimes referred to as an electronic load adjuster or Form F generator.

9–2. AUTHORITY FOR USE. All new weight and balance computer programs must have the approval of the organization that has engineering responsibility for the baseline aircraft before it maybe used. All program changes must have prior approval before incorporation.

9–3. OBJECTIVE. Currently the objective of the weight and balance computer is to replace the mechanical load adjuster and to eliminate the need to physically complete a Form F prior to each flight.

9–4. CALCULATIONS. The design data upon which the balancing computer is developed shall be based upon the aircraft –5 series TO.

9–5. PROGRAM CHANGES. The program shall be written to prohibit field changes to the approved and validated program. This will ensure uniformity and allow program control and verification. To the maximum extent possible, the program shall be designed to allow for future changes in the aircraft. For example, the original aircraft cg may change or new stores may be added to the aircraft load.

9–6. EASE OF OPERATION. To the maximum extent possible, the program shall be designed for ease of use. Required keystrokes shall be minimized and required inputs shall be prompted for by the program. Once the outputs have all been displayed, provisions will be made to redisplay them without repeating all of the calculations.

9–6.1. To facilitate ease of operations, the computer program should, to the maximum extent possible, follow the format of the Form F. Either the transport or tactical form shall be used as appropriate. Calculated values on the form such as Operating weight and moment, and Total Aircraft weight and moment shall be determined by the calculator. Subsequent changes to a value used in determining a calculated value shall result in the calculated value being automatically updated. For example, once an initial calculation has been made, updating the fuel weight will result in correction of the aircraft weight.

9–6.2. To the maximum extent possible, the computer shall not require input of standard items. Thus if the computer is designed for a single aircraft, the normal index or moment of standard items such as crew, oil, stores, etc. will be used by the computer and will not be entered by the user. To further facilitate ease of use, the computer may use input items such as compartments or stations which the user may readily know and which the computer will convert to the appropriate arm. Once an item has been input, the program will check the input value against acceptable limits to verify its validity.

9–7. COMPUTATIONAL REQUIREMENTS. The weight and balance computer shall be designed to provide rapid operation for the following:

Determination of the weight and cg location for any loading condition.

Adjust the cg of any increase, decrease, or relocation of fuel, passengers, crew, stores, or any other load.

Determine the required shift of fuel, passengers, crew or any other load item during flight operations to maintain the cg within the permissible limits.

Determine the cg limitations throughout the allowable weight range. If the cg is effected by other factors like wing movement, these factors shall be taken into account.

NOTE

For some aircraft, lateral weight and cg may be as important as longitudinal cg.

Calculation of in–flight weight and cg for standard fuel usage to ascertain cg does not go outside of envelope for proposed mission.

All aircraft limitations shall be included such as floor loading, compartment capacities, pylon capacity and caution zones.

EXAMPLE

KC-135R Ø

DATE: 281Ø86

SERIAL NO: 123456

2.Ø G OPERATION

BASIC

WT 118,33Ø.
MOM 1Ø4,Ø65.

5. CREW
WT 1,Ø75.
MOM 288.

CARGO

COMPARTMENT F
WT 6,25Ø.
MOM 3,625.

COMPARTMENT H
WT 2ØØ.
MOM 142.

COMPARTMENT I
WT 1,5ØØ.
MOM 1,17Ø.

COMPARTMENT K
WT 1,ØØØ.
MOM 93Ø.

COMPARTMENT N
WT 3,5ØØ.
MOM 3,885.

COMPARTMENT Q
WT 1,ØØØ.
MOM 1,288.

MISC. INTERNAL CARGO
STATION 1,2ØØ.
WT 2,750.
MOM 3,300.

CARGO WT 16,2ØØ.
CARGO MOM 14,34Ø.

PASSENGERS

2 PASSENGERS
COMPARTMENT C
WT 36Ø.
MOM 14Ø.

3 PASSENGERS
COMPARTMENT E
WT 54Ø.
MOM 275.

TOTAL PAX 5.
WT 9ØØ.
MOM 416.

OPERATING

WT 136,5Ø5.
MOM 119,1Ø9.

FUEL

TANK	WT	DEN
1R	2.8ØØ	6.5
1 MAIN	11.7ØØ	6.5
2 MAIN	13.5ØØ	6.5
3 MAIN	13.5ØØ	6.5
4 MAIN	11.7ØØ	6.5
4R	2.8ØØ	6.5
FWD	15.ØØØ	6.5
CTR	18.5ØØ	6.5
AFT	14.5ØØ	6.5
UDECK	Ø.2ØØ	6.7

TOTAL FUEL
WT 1Ø4.2ØØ
MOM 85,63Ø

TAKEOFF

WT 24Ø,7Ø5.
MOM 2Ø4,739.

%MAC

16.Ø (26.6) 35.Ø
(WITHIN LIM)

COMPUTED BY

_____

PILOT

_____

Figure 9–1. Computer Generated Form F

9–8. ACCURACY. The accuracy of the balancing computer shall be such that cg locations determined by the balancing computer shall not vary from the cg locations by more than 1/10 of 1 percent of the MAC of the airplane to which the balancing computer applies. Weights, arms and simplified moments shall be displayed to the nearest whole number, however, the computer program shall be more accurate. This may result in the displayed values not agreeing mathematically but will meet the required accuracy. For example, if the weight is 5.6 and the arm is 278.6 and the moment is to be displayed as moment/100 then the actual moment is 15.6016. The computer will display the weight as 6, the arm as 279, and the moment as 16. The apparent result appears incorrect since 6 x 279 should yield a moment of 16.7. The actual internal result however, will be mathematically correct and the apparent percentage of inconsistency as displayed will normally not be this large since, unlike the example, many inputs will be in thousands of pounds not tens of pounds.

9–9. INSTRUCTION BOOK. An instruction book shall be developed for each weight and balance computer. This book shall contain detailed instructions for operating the computer. Solutions of sample problems shall be included along with appropriate illustrations to improve clarity and effectiveness. This instruction book shall be submitted to the office of engineering responsibility for approval prior to use.

9–10. COMPUTER. If the computer is to be used in–flight the computer shall not produce electromagnetic interference problems with the aircraft and the display must be compatible with crew use.

CHAPTER X
LOAD ADJUSTER

10–1. PURPOSE. The purpose of the adjuster is to enable the pilot, crew chief, or loading personnel to (1) direct the load and (2) control the cg location of a particular model aircraft. Through the load adjuster, one can rapidly and accurately determine: if the cg is within the loading range for any loading condition; the loading for any desired cg location; the effects of any weight or location changes for such items as crew, fuel and cargo during flight and what steps would be necessary to keep the cg within the safe loading range.

10–2. DESCRIPTION. There are two types of load adjusters: The more common slide–rule type (see figure 10–1) and the circular type. All load adjusters operate on the principle of the addition and subtraction of moments for Chart E load items to and from the aircraft basic moment. This is done through the use of the index number scale.

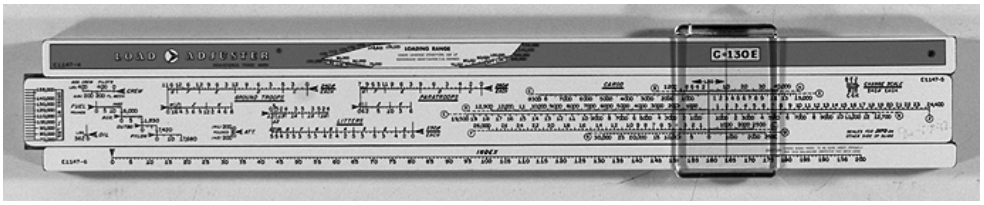

FRONT

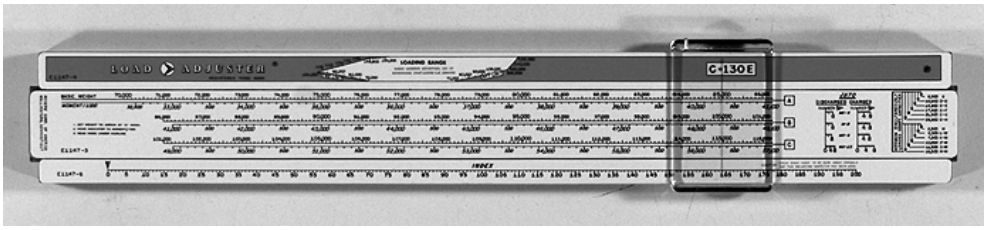

BACK

Figure 10–1. Load Adjuster

10–2.1. BASE. The base is the part of the load adjuster that the slide and indicator move over during computation and where the index number scale is located.

10–2.1.1. SLIDE–RULE TYPE. Printed on the top front of the slide–rule type base is the applicable aircraft; on the bottom, the index number scale. On the back of the base is a diagram of the fuselage showing the compartments and their centroids and the fuselage station and/or balance arm scale. The index formula is printed in the recess under the slide and is expressed in terms of the aircraft weight and arm. Also in the recess is a gross weight vs cg grid: The horizontal lines represent the gross weight and the slanted lines represent the cg (in inches and percent MAC). A loading range grid, printed on the top front of the base, presents the gross weight vs cg grid without all the slanted cg lines. It is used to determine if a particular loading condition will exhibit safe flight characteristics (see paragraph 10–3).

10–2.1.2. CIRCULAR TYPE. On the front and back edges of the circular type base is the index number scale. Also on the base are the aircraft model and the index formula.

10–2.2. SLIDE. The slide is the part of the load adjuster on which the Chart E load item scales are located, as well as the basic weight vs simplified moment scales. The purpose and use of these scales are described in paragraph 10–5.

10–2.2.1. SLIDE–RULE TYPE. The slide of the slide–rule type load adjuster is set into grooves in the base. Usually, the

basic weight vs simplified moment and the miscellaneous loading scales are located on one side, while the fuel, crew, and cargo compartment loading scales are located on the other. A vertical gross weight scale is located on the left end of one side of the slide and is used with the gross weight vs cg grid in the recess of the base (see paragraph 10–3).

10–2.2.2. CIRCULAR TYPE. There are two slides to the circular type load adjuster which are attached to the front and back of the base by a rivet. Basic weight vs simplified moment scales are usually located on the same slide as compartment/ bomb bay scales. On the other slide are the remaining Chart E loading scales and also a gross weight vs cg grid (or equivalent index number and gross weight to cg conversion system).

10–2.3. INDICATOR. The indicator is the piece of clear plastic that moves over the slide and the base. Inside the plastic and perpendicular to the loading and index number scales is the indicator hairline, used to line up the settings and determine the readings for all load adjuster computations.

10–2.4. CARRYING CASE. The load adjuster is furnished with a leather or neolite case and a metal wall clip for storage. On the case is a transparent pocket for an identification card and a strap that fits over the tongue of the clip.

10–2.5. CLEANING THE LOAD ADJUSTER. Wash the indicator with a soft, grit–free cloth, chamois, or sponge, using soap and water. Automobile or furniture wax covers minor scratches and helps prevent further abrasion. To clean the faces of the slide and base, use caustic–free soap with cold water and wipe dry with a soft cloth or tissue paper.

NOTE

Do not wash with such cleaners as acetone, benzene, lacquer thinner, or kitchen cleaners as they would damage the surface.

10–3. LOADING RANGES. The gross weight vs cg grids (or their equivalents) are used to determine the cg for a particular takeoff or landing condition and if the aircraft will exhibit safe flight or landing characteristics. This is done through color–coded loading ranges.

10–3.1. SAFE LOADING RANGE (WHITE). A loading computation ending with the indicator hairline intersecting the appropriate gross weight in the white area of the grid indicates a safe loading arrangement. Since the edges of this white area define the limiting cg conditions for safe flight and landing characteristics, the preferable gross weight conditions are those represented in the middle of the white area.

10–3.2. CAUTION LOADING RANGE (YELLOW). A computation ending in a yellow area indicates a loading condition which requires restricted aircraft operations. Such restrictions are called out in the aircraft –5 series TO.

10–3.3. DANGER LOADING RANGES (RED). A computation ending in the red area indicates critical operation conditions. The loading must be redistributed if the hairline intersects the gross weight in this red region. This is mandatory.

10–4. LOAD ADJUSTER INDEX. The load adjuster index is a number that reflects the total aircraft condition and should not be confused with the simplified moment.

10–4.1. INDEX FORMULA. The index formula is the master formula for the index number scale and is defined as follows:

$$\text{Index Number} = \frac{\text{C– Basic Weight x (A – Basic Arm)}}{\text{B}}$$

It is printed on the base of both the slide–rule type and circular type load adjusters and in the accompanying instructions. It can be used to directly compute corresponding indexes for conditions where the aircraft weight and moment are known. A, B, and C are constants determined for a specific aircraft and defined as follows:

10–4.1.1. A is the distance, usually measured in inches, from the usual longitudinal reference datum to a new longitudinal datum used specifically with the load adjuster. This new reference datum is usually located at the aft cg limit of the aircraft.

10–4.1.2. B is a reduction factor, which makes the index number easier to handle. Just as a true moment is divided by a factor to get a simplified moment, the load adjuster moment (calculated with the distance from the load adjuster reference datum as the arm) is divided by B to get a raw index number.

10–4.1.3. C is added to the raw index number to keep it positive. The raw index number (Basic Weight x (A – Basic Arm) ÷ B) can be positive or negative, depending upon whether the cg is to the left or right of the load adjuster reference datum.

10–4.2. BASIC INDEX. The basic index is the reading from the load adjuster's index scale, which corresponds, to the current aircraft basic weight and basic moment. To find this index, either the basic weight vs basic simplified moment scales or the index formula can be used. The operations

involved in finding the basic index through the load adjuster scales are as follows:

10–4.2.1. Move the indicator hairline over the arrow at zero on the index number scale.

10–4.2.2. Move the slide until the basic weight is under the hairline.

10–4.2.3. Move the indicator until the hairline is over the basic simplified moment. If it is not on the same scale as the basic weight, move the indicator to the highest simplified moment on the scale. Notice that the next basic weight vs simplified moment scale (directly below) starts with the same simplified moment. Move the slide until the hairline is directly above this simplified moment on the lower scale. Repeat as often as necessary until the hairline is over the basic moment.

10–4.2.4. The number on the index number scale under the hairline is the basic index.

10–4.3. RUNNING INDEXES. The running indexes are the readings taken from the index scale and recorded on the Form F as the form is completed. They relate to the moments of the basic aircraft loaded with all items listed up to and including those specified at that particular loading stage.

10–4.4. GROSS INDEX. The gross index is the running index corresponding to the takeoff or landing condition for a particular aircraft mission. It can be found by using the basic index and the load adjuster Chart E scales, the basic weight vs simplified moment scales or the index formula.

10–5. CHART E SCALES (LOADING SCALES). On the slide, along with the basic weight vs simplified moment scales, are the Chart E or loading scales. Through these scales the cg effects of various combinations of loads can be determined. Each scale has an arrow indicating both the zero mark and the direction in which the indicator is moved for the addition of the load item.

10–5.1. OIL LOADING SCALE. If the oil is not included in the aircraft basic weight, oil loading scale will have to be used. The oil loading is usually presented in a single scale, since oil tanks are often close to one another and equal in capacity. For some aircraft, the oil load index contribution is negligible and the scale is omitted and replaced by an explanatory note.

10–5.2. CREW LOADING SCALES. The crew loading scales are graduated in pounds, crew position, or both. They are usually one continuous scale or multiple scales (corresponding to the crew positions) with the standard weight for each located over the zero mark for the next. In both cases, a full crew can be computed with only one indicator movement.

10–5.3. PERSONNEL LOADING SCALES. This category refers to all non–flight crew personnel. It includes such personnel as console operators, ground troops, paratroops, litters and litter attendants. Usually each is a separate scale graduate in pounds, personnel position, or both. Each individual scale may be divided into smaller scales representing row or compartment position. These smaller scales are generally attached so that the normal row or compartment load setting is directly over the zero mark for the next row or compartment. Thus, the effect of the normal number and location of particular personnel can be determined in one indicator movement. This cannot be done, however, if there are vacancies or overloads, or if the normal number of personnel are not seated in their normal locations. If there is any uncertainty about the normal number or location of personnel, the effects should be determined by individual row or compartment. On some load adjusters, the personnel loading scales are combined with the compartment loading scales, and may be graduated in both the number of personnel and pounds of cargo by compartment, or only in pounds.

10–5.4. COMPARTMENT LOADING SCALES. The compartment loading scales are based on the average arms of cargo loaded into compartments. Often these arms are measured to the geometric center of the compartment. Usually the effects on the running index of items such as baggage and special equipment are determined through compartment scales. The scales are graduated in pounds, extend to the left and the right of a common vertical zero mark, and labeled corresponding to the aircraft diagram on the back of the base.

10–5.5. AMMUNITION LOADING SCALES. The ammunition is usually represented in a single loading scale since it is normally fed from a common bay or the bays are close enough to use an average arm. The scale may be graduated in pounds, rounds, or both. Care should be taken in determining the effects of expending ammunition using a load adjuster if cases can be retained or expended for different missions.

10–5.6. BOMB LOADING SCALES. The bomb loading scales reflect the effects on the running index of such stores as bombs, depth charges, torpedoes, and mines. They are usually graduated in pounds.

10–5.7. FUEL LOADING SCALES. The fuel loading scales may be graduated in pounds, gallons, or both. Most are in pounds, with different full fuel loads marked for different

fuel densities. When the tanks are not represented on one continuous scale, the filling sequence moves down the slide face. Most arrangements for non–continuous fuel scales either extend from a common vertical zero mark or are connected with the maximum fuel mark of one scale directly over the zero mark for the next. With alternate fuel tank configurations, the configuration used when the fuel tank was calibrated is noted near the fuel tank scale. If the fuel in a tank has a near constant cg located on or very near the load adjuster reference datum, the index contribution will be negligible and will be noted as such.

10–5.8. MISCELLANEOUS LOADING SCALES. This is a general category referring to load items peculiar to a particular aircraft design, mission, or configuration, such as injection water, potable water, RATO, JATO, chaff and flares.

10–5.9. CREW/PERSONNEL MOVEMENT SCALES. The movement of crew and mission personnel changes the arms for their respective weights and also changes the aircraft moment and cg. That is why there are usually crew/personnel movement scales on the load adjuster. These scales are derived for a standard personnel weight selected to represent one member of the crew or mission personnel. They are graduated in compartments so that the effect on the running index of personnel moving from one compartment to another can be easily computed.

10–6. USING THE LOADING SCALES. The loading scales can be used to compute the effect of the addition or expenditure of a specific load item on any running index.

10–6.1. ADDITION. The procedure to compute the running index for the addition of a specific load item is as follows:

10–6.1.1. Move the slide until the zero mark of the specific loading scale is under the indicator hairline.

10–6.1.2. Move the indicator until the hairline is over the weight or quantity of the addition to be computed.

10–6.1.3. The reading now under the hairline is the running index ,which corresponds to the original aircraft condition plus the specific load item.

10–6.2. EXPENDITURE. The procedure used to compute the running index for the expenditure of a specific load item is as follows:

10–6.2.1. Move the slide until the setting corresponding to the total weight or quantity of the specific load item contained in the aircraft condition is under the hairline.

10–6.2.2. Move the indicator until the hairline is over the setting, which corresponds to that weight or quantity of the load item that will remain in the aircraft.

10–6.2.3. The reading on the index scale now under the hairline is the running index corresponding to the original aircraft condition minus the specific load item.

NOTE

For the partial expenditure of some items (such as fuel), it may be easier to remove the entire item index contribution, and then re–enter the index contribution of the remaining portion.

10–6.3. MOST FORWARD CG AND MOST AFT CG. Before computing the Form F most forward cg and most aft cg, it is necessary to determine what configurations will produce these conditions for the specific mission. The determination requires a clear understanding of the principles and procedures described in Section VII, as well as the loading and expenditure data and requirements for the aircraft and the specific mission. Once the most forward and aft cg configurations are determined the center of gravities can be computed. By using the procedures described above, add or expend stores, ammo, fuel, etc. to or from any previously computed weight and index of that specific mission. The cg can then be read by removing the slide and reading the cg at the inter–section of the hairline and the computed gross weight on the loading scale.

10–6.4. CORRECTIONS. Corrections are accomplished on the Form F in much the same way as previously described. The effect of the load items to be added or removed is computed by applying the procedures previously described to the weight and index to be corrected. The corrected cg is read by removing the slide and reading the cg at the intersection of the hairline and the corrected weight on the loading scale. The loading scale also indicates if the corrected cg is within the Safe (white), Caution (yellow), or Danger (red) loading ranges.

10–7. ACCURACY. The accuracy of the load adjuster is based on MIL–C–6092A which requires that the center of gravity determination using the load adjuster not vary from the mathematical calculations by more than 1/10 of 1 percent of the MAC.

SECTION XI
VECTOR DIAGRAM

11–1. PURPOSE. The function of a vector diagram is to provide a graphical solution to the aircraft center of gravity, cg, control requirement. The vector diagram provides a method, which can:

Determine if the weight and cg are within the allowable limits.

Record the weight and cg changes, which occur during flight.

Provide cg controls, which produce a desired cg.

Provide the user with a better understanding of cg changes.

11–2. DESCRIPTION. The vector diagram is a drawing of an aircraft's allowable weight and cg envelope and its cg movement. The vector diagram, sometimes called fan diagram or fan grid is a convenient tool because any given loading will always produce exactly the same vector, a line of a specific length and direction. Regardless of the aircraft weight and cg at the start of a loading the cg and weight will change by the amount and in the direction determined by the vector. The rectangular diagram cannot use the vector procedures.

11–3. DIAGRAM CONSTRUCTION. The aircraft –5 series TO Basic Weight Checklist and Loading Data, also known as CHART E LOADING DATA, is the data source and authority for vector diagram construction. The construction may be positioned on the paper as desired and constructed to any convenient scales.

11–4. DIAGRAM USE. Use of a vector diagram is optional within the using command. Diagram use can be illustrated as follows: An airplane is to fly a maximum endurance mission. Fuel management, to control the cg, is to be determined through the use of a vector diagram. Chart C weight record and the TO –5 CHART E LOADING DATA provide data as follows:

MAC, Mean Aerodynamic Chord	= 272.3
LEMAC, Leading Edge of MAC	= 763.0
Basic Weight	= 172,728 pounds at 864.9 (37.4% MAC)
Crew, Flight, 5	= 1,075 at 92
Crew, Mission, 14	= 3,010 at 530
Food and Water	= 266 at 1,291
Maximum Takeoff Weight	= 325,000
Maximum Fuel Capacity	= 151,938

11–4.1. The data provides the operating weight as the sum of the individual weights as 177,079 at 855.2, 33.9% MAC. The maximum fuel, for this mission, is the maximum takeoff weight less the operating weight, or 147,921. Note that fuel capacity is 151,938.

11–4.2. A typical fuel loading is to load the outboard wing tanks to capacity and the center wing tank with the remainder as follows:

Reserve 1 and 4	5,708 lbs at 1101.7
Main 1 and 4	30,199 lbs at 934.6
Main 2 and 3	52,896 lbs at 788.4
Center Wing	59,118 lbs at 710.9

The fuel added to the operating weight results in a takeoff gross weight of 325,000 pounds at 829.8, which is 24.5% MAC.

11–4.3. Typical Fuel use sequences are outlined in the –5 TO and, in this case, would be as follows:

11–4.3.1. Center wing for takeoff, climb, and cruise.

11–4.3.2. Center wing to engine 1 and 4 and main 2 and 3 to engine 2 and 3 until the total of main 2 and 3 equals the total of main 1 and 4 plus reserve 1 and 4.

11–4.3.3. Main 1, 2, 3, and 4 to adjacent engines until gross weight is not more than 285,000.

11–4.3.4. Transfer reserve 1 and 4 to main 1 and 4.

11–4.3.5. Main 1, 2, 3, and 4 to adjacent engines until 8,000 remains in each main tank.

11–4.3.6. Center wing to engine 1, 2, 3, and 4 until empty.

11–4.3.7. Main 1, 2, 3, and 4, to adjacent engines until empty.

11–4.4. Fuel Management can be determined as follows:

11–4.4.1. On the vector diagram (Figure 11–1) locate the takeoff gross weight at 325,000 and 24.5% MAC.

11–4.4.2. Construct a center wing fuel vector from the gross weight location. The vector is parallel to the center wing vector on the diagram margin and exits the allowable cg envelope at approximately 33% MAC and 273,600 pounds. The maximum acceptable vector length is 3.5 inches of the 4.52 inch center wing Fuel Vector which represents (3.5/4.52) 66,254, or 51,303 pounds.

11–4.4.3. The next fuel use is from the center wing and main 2 and 3 until the total of main 2 and 3 equals the total of main 1 and 4 plus reserve 1 and 4. Main 1 and 4 plus reserve 1 and 4 have a total of 35,908. Main 2 and 3 have a total of 52,896. Thus main 2 and 3 are to supply 52,896 less 35,908, or 16,988. A total of 33,976 is to be 16,988 from the center wing and 16,988 from main 2 and 3. The main 2 and 3 vector is (16,988/52,896) 2.86, or 0.92 inches. The center wing vector is (16,988/66,254) 4.52, or 1.16 inches. At the 250,000 pounds and 35% MAC point on the vector diagram construct a vector equal to the center wing 1.16 vector and the main 2 and 3 vector of 0.92. Construct a line parallel to the vector diagram aft cg limit through the center wing and main 2 and 3 vector termination. The parallel line intersects the initial center wing vector at approximately 291,200 pounds and 29.7% MAC. It is now evident that not more than 325,000 less 291,200, or 33,800 pounds, may be used from the center wing initially for takeoff, climb, and cruise. Arbitrarily, use 25,000 from the center wing. Construct the center wing and main 2 and 3 vector from the center wing terminal point at 300,000 pounds for the initial fuel use. The vector will terminate at 300,000 less 33,976, or 266,024 pounds.

11–4.4.4. Reserve 1 and 4 are to be transferred to main 1 and 4 while main 1, 2, 3, and 4 supply adjacent engines until 8,000 pounds remain in each main tank. Main 2 and 3 have 52,896 less 16,988, or 35,908 pounds. The 35,908 less 16,000 is 19,908 which is to be used from main 2 and 3 and 19,908 is to be used from main 1 and 4. The cg moves from 266,024 pounds and 32.7% MAC to 226,208 pounds and 29.6% MAC.

11–4.4.5. Next the center wing is used until empty. The center wing contains 59,118 less 25,000 less 16,988, or 17,130 pounds. Construct the 17,130 vector. The vector terminates at 209,078 pounds and 33.3% MAC.

11–4.4.6. Next the main 1, 2, 3, and 4 supply adjacent engines until flight termination. The zero fuel condition is 177,079 pounds at 33.9% MAC, which is the operating weight for this flight.

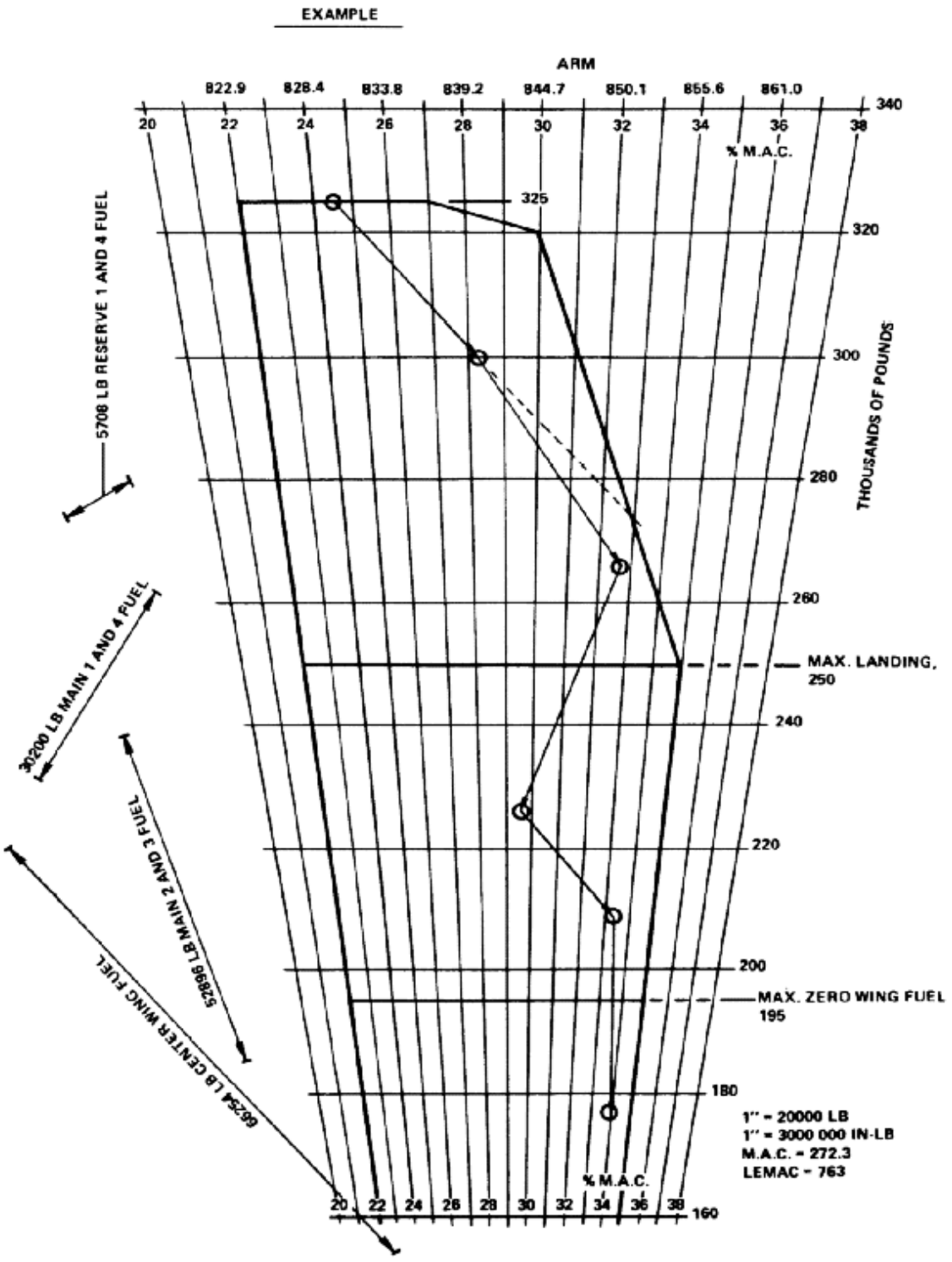

Figure 11–1. Vector Diagram

11–4.4.6.1. An arithmetic check of the vector solution can be made as follows:

ITEM	WEIGHT	ARM	% MAC
Basic Wt, Chart C Data	172,728	864.9	37.4
Crew, Flight, 5	1,075	92	
Crew, Mission, 14	3,010	530	
Food and Water	266	1291	
Operating Wt	(177,079)	855.2	33.9
Fuel,Reserve 1 and 4	5,708	1101.7	
Main 1 and 4	30,199	934.6	
Main 2 and 3	52,896	788.4	
Center Wing	59,118	710.9	
Takeoff Gross Weight	(325,000)	829.8	24.5
Use 2500 Center Wing	– 25,000	705.6	
	(300,000)	840.1	28.3
Use 16988 Main 2 and 3	– 16,988	785.2	
Use 16988 Center Wing	– 16,988	709.9	
	(266,024)	851.9	32.7
Use 19908 Main 2 and 3	– 19,908	794.8	
Use 19908 Main 1 and 4	– 19,908	950.9	
Transfer reserve 1 and 4 to Main 1 and 4	– 5,708	1101.7	
	5,708	915.1	
	(226,208)	843.6	29.6
Use Center Wing Until Empty	– 17,130	719.6	
	(209,078)	853.7	33.3
Use Main 1 and 4 Until Empty	– 15,999	907.3	
Use Main 2 and 3 Until Empty	– 16,000	783.8	
Operating Wt (Zero Fuel Condition)	(177,079)	855.2	33.9

11–5. VECTOR DIAGRAM CONSTRUCTION. (See Figure 11–2). Construction of a vector diagram starts with the collection of data such as may be found in the appropriate –5 TO loading data. The data which follows represents the aircraft, which was considered in the section on vector diagram use.

MAC, Mean Aerodynamic Chord	= 272.3
LEMAC, Leading Edge of MAC	= 763.0
Basic Weight	= 172,728 pounds at 864.9 (37.4% MAC)
Crew, Flight, 5	= 1,075 at 92
Crew, Mission, 14	= 3,010 at 530
Food and Water	= 266 at 1,291
Operating Weight	= 177,079 at 855.2 (33.9% MAC)
Maximum Takeoff Gross Weight, MTOGW	= 325,000
Maximum Fuel Capacity	= 151,938

CG, Center of Gravity, Envelope Limits are 22% MAC forward up to 325,000 pounds and 35% MAC aft up to 250,000 to 30% at 320,000 pounds, to 27% at 325,000 pounds.

Some individuals constructed the diagram on a standard 8 1/2 by 11 inch paper with the diagram longitudinal axis, the weight axis, in the 8 1/2 inch direction as in Figure 11–2. Others prefer the weight axis to be in the 11 inch direction as shown in Figure 11–1. This example will be as in Figure 11–2. For this example, the diagram will be positioned in the upper region of the paper so that data may be placed in the lower region.

11–5.1. The weight range is to be from 170,000 to 340,000 pounds, a range arbitrarily selected to somewhat exceed current limits. The space available is 8 1/2 less 0.75, left margin, less 0.5, right margin, or 7.25 inches. The minimum weight scale is (340,000 –170,000)/ 7.25, or 23,448 lbs/inch. It is convenient to construct the diagram to a scale of 1 inch equals 30,000. The longitudinal, weight, scale will be (340,000–170,000)/30,000, or 5.67 inches.

11–5.2. The moment axis is perpendicular or in this example, vertical to the weight axis. The moment range will be from 20 to 38% MAC which equates to 340,000 x (0.38–0.20) x 272.3, or 16,664,760 inch pounds. (The moment RANGE = Maximum Scale Weight x % MAC Range x MAC). The moment range is selected to somewhat exceed current weight and cg envelope limits. The vertical space available is estimated to be 5 inches. The moment divided by 5 is 3,332,952 inch pounds. Arbitrarily, the moment scale will be set to 1 inch = 3,000,000, or 5.55 inches.

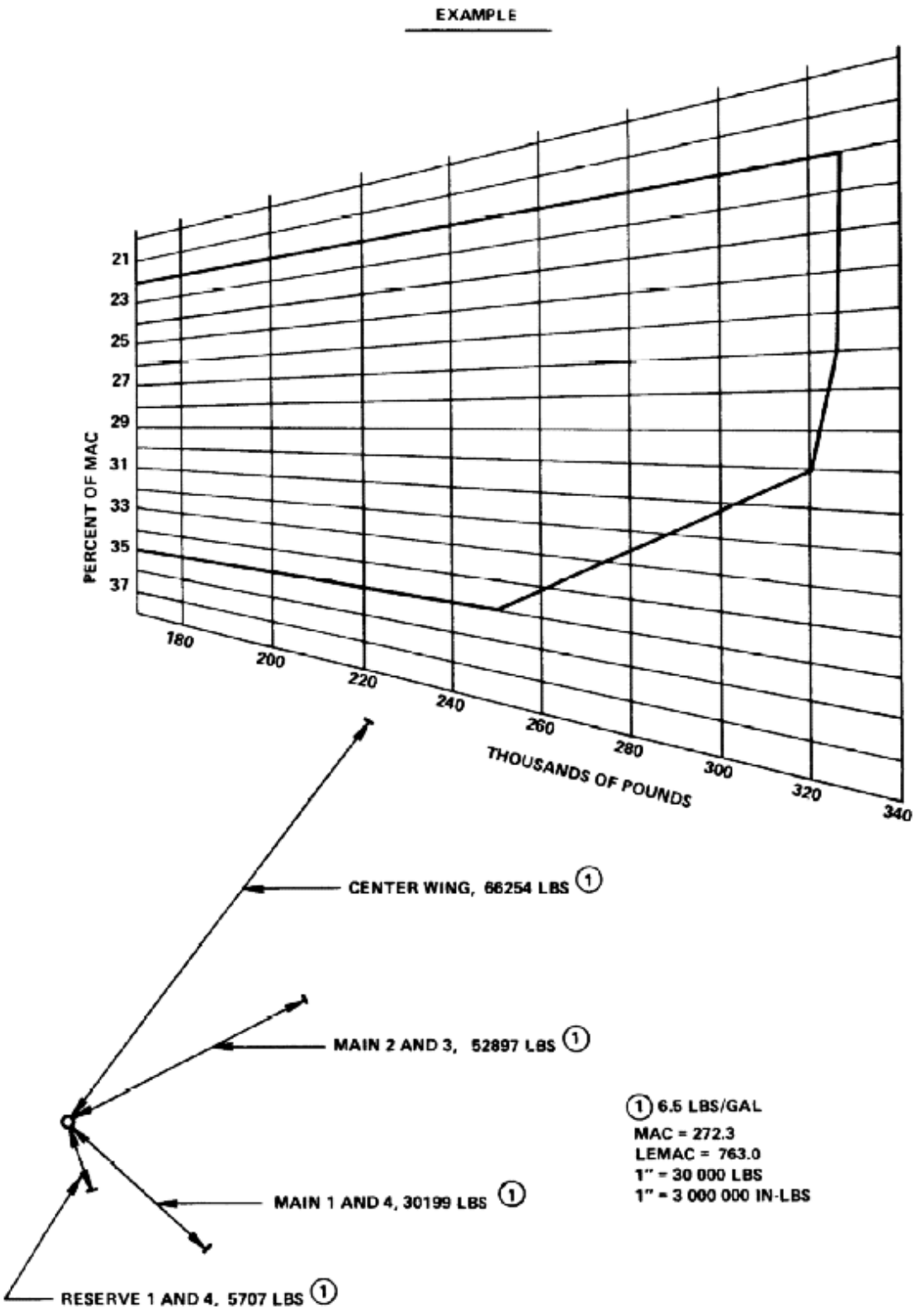

Figure 11–2. Vector Diagram Construction

11–5.3. Diagram construction will proceed as follows. The median moment line, 29% MAC, (20% + 38%)/2, will be located (0.5)x5.55 plus 1, top margin, or 3.75 inches from the top of the paper and it will extend left a distance of 5.67 inches from a point 0.75 inches left of the right margin. Construct the 29% MAC line.

11–5.4. At the right end of the 29% MAC line erect a perpendicular line which is the 340,000 pound line. This line is to be 5.55 inches long, divided into equal parts by the 29% MAC line. Divide this perpendicular line into 18 equal parts, which represent the 20 to 38% MAC lines.

11–5.5. At the left end of the 29% MAC line erect a perpendicular line, which is the 170,000 pound line. The perpendicular will be 170,000x(0.38–0.20)x(272.3)/3,000,000, or 2.78 inches total, bisected by the 29% MAC line. Divide this perpendicular line into 18 equal parts, which represent the 20 to 38% MAC lines. Construct straight lines connecting the same %MAC points on the right and left perpendicular lines. Label the %MAC and weight line appropriately.

11–5.6. It is desired to include fuel vectors in the diagram margins. To do this, the vector will be, temporarily, constructed within the diagram and transferred to the diagram margin. The vectors will be constructed from the 240,000 pounds and 32 %MAC intersection for ease of construction. Fuel data is as follows when fuel density is 6.5 lb/gal.

Reserve 1 and 4	= 5,707 pounds at 1,102
Main 1 and 4	= 30,199 pounds at 935
Main 2 and 3	= 52,897 pounds at 788
Center Wing	= 66,254 pounds at 707

Define the Reserve 1 and 4 vector as follows:

$$240{,}000\ ((0.32)\ 272.3 + 763) + 5{,}707\ (1102) = (240{,}000 + 5{,}707)\ \text{Arm}$$

$$\text{Arm} = 856,\ 34.2\ \%\text{MAC}$$

11–5.6.1. The vector extends from 240,000 pounds at 32 %MAC to 245,707 pounds at 34.2 %MAC. Construct this vector on the diagram.

11–5.6.2. The other vectors are found in a similar fashion and are constructed as follows:

11–5.6.2.1. Main 1 and 4 vector is from 240,000 pounds at 32% to 270,199 pounds at 35.5 %MAC.

11–5.6.2.2. Main 2 and 3 vector is from 240,000 pounds at 32% to 292,897 pounds at 27.9 %MAC.

11–5.6.2.3. Center wing vector is from 240,000 pounds at 32% to 306,254 pounds at 20.6 %MAC.

11–5.7. Transfer the vectors outside of the diagram and label them appropriately. A vector may be moved through the use of a pencil, a scale, and two triangles. Remove the vectors from within the diagram. Place the weight and moment scales and the MAC and LEMAC data in the lower right area of the paper. Outline the weight/cg envelope in heavy lines. Place the model designation, example in this instance, at the top of the paper. The diagram is complete since only fuel vectors were to be considered. Vectors can be constructed for munitions delivery paratroop drop, passenger movement, and all flight events.

APPENDIX A
DEFINITIONS

AFT CENTER OF GRAVITY LIMIT.

The aft center of gravity limit is the most aft permissible aircraft cg location for a specific weight and configuration.

AIRCRAFT WEIGHING RECORD.

An AIRCRAFT WEIGHING RECORD, DD FORM 365–2, is the form used to record data obtained from aircraft actual weighing.

ALLOWABLE GROSS WEIGHTS.

The allowable gross weight is the not to be exceeded weight of a loaded aircraft. The aircraft flight manuals (i.e., –1 Flight Manual and –5 Basic Weight Checklist and Loading Data) specify allowable weights for particular configurations or conditions. Some examples are allowable takeoff weight, allowable landing weight, and allowable limiting wing fuel weight.

ARM.

An arm is the distance of a weight from a reference datum.

AUTOMATED WEIGHT AND BALANCE SYSTEM (AWBS).

The AWBS is a system that utilizes a desk top computer to fill out forms similar to the DD 365 series forms. Aircraft weight data is stored in the program and may be updated via the computer, thus reducing mathematical errors. More information on the AWBS is found in Section VIII.

AVERAGE WEIGHT.

The summation of the individual weight divided by the number of the individual weights, i.e.: (First Weight + Second Weight + Third Weight)/3 = Average Weight.

BALANCE.

Balance is a condition of stability, which exists in an aircraft when all weights and forces are acting in such a way as to prevent rotation.

BALANCE ARM.

The balance arm is the arm at which a number of weights could be concentrated to produce the same effect as they produced when separated. The balance arm results from dividing the total moment by the total weight.

BALANCE COMPUTER.

A balance computer is a calculating device, mechanical or electronic, which is used to determine the aircraft cg location for any flight or ground configuration.

BALLAST.

Ballast is any weight put in an aircraft to balance the aircraft so as to remain within the aircraft permissible cg limits.

BASIC ARM.

The basic arm is the distance from the reference datum to the aircraft basic weight cg. Basic arm is determined by dividing the aircraft basic moment by the aircraft basic weight.

BASIC INDEX.

A basic index is a number, which represents a basic moment on an aircraft load adjuster.

BASIC MOMENT.

The basic moment is the sum of the moments of all items included in the aircraft basic weight.

BASIC WEIGHT.

Basic weight is the sum of weight empty and weights of items not in Chart E. Examples of items in basic weight may be guns, unusable fuel, engine oil, ballast, survival kits, oxygen, and internal and external equipment not disposed of during flight. The aircraft current basic weight is the last entry in the CURRENT TOTAL BASIC AIRCRAFT column on the Chart C.

BASIC WEIGHT AND BALANCE RECORD.

The BASIC WEIGHT AND BALANCE RECORD is a continuous series of DD FORMs 365–3, referred to as Chart C. It is a continuous and permanent record of aircraft weight, moment and load adjuster index or cg position.

BASIC WEIGHT CHECKLIST RECORD.

The BASIC WEIGHT CHECKLIST RECORD is a completed collection of DD FORM 365–1, referred to as Chart A. It is a list of equipment by aircraft compartment which is, or can be, installed in the aircraft.

BUTTLINES.

Buttlines are reference locations in the lateral (left or right) direction from the aircraft longitudinal (forward to aft) reference datum, which is usually, the aircraft centerline.

CG

CG or cg is an abbreviation of center of gravity.

CAUTION RANGE.

A caution range is a region of a weight and cg diagram, or table, which indicates reduced aircraft capabilities, such as aircraft control or structural limitations.

CENTER OF GRAVITY.

The center of gravity, CG or cg, is that point at which an item's weight may be assumed to be concentrated and about which the item would balance if suspended.

CENTROID

Centroid is commonly used as the average arm or geometric center of a compartment.

CHART A.

See BASIC WEIGHT CHECKLIST RECORD.

CHART C.

See BASIC WEIGHT AND BALANCE RECORD.

CHART E.

See LOADING DATA.

CHORD.

A chord is an imaginary straight line joining the leading and trailing edges of an airfoil (such as a wing or tail surface).

CONFIGURATION.

Configuration is a particular arrangement and quantity of structure, systems, internal and external equipment, stores, fuel, and other items, and the positions of such things as wings, slats, flaps, and landing gear.

DANGER RANGE.

A danger range is a region of a weight and cg diagram, or table, within which flight and/or ground operation of an aircraft is not permitted.

DD FORM 365.

See RECORD OF WEIGHT AND BALANCE PERSONNEL.

DD FORM 365–1.

See BASIC WEIGHT CHECKLIST RECORD.

DD FORM 365–2.

See AIRCRAFT WEIGHING RECORD.

DD FORM 365–3.

See BASIC WEIGHT AND BALANCE RECORD.

DD FORM 365–4.

See WEIGHT AND BALANCE CLEARANCE FORM.

DRAINABLE FUEL.

Drainable fuel is that portion of the fuel that can be drained out of an aircraft through drain points after defueling in accordance with appropriate TOs.

FLIGHT GROSS WEIGHT.

Flight gross weight is the weight of the aircraft, its contents and external items during flight. It is also know as flight weight and in–flight weight.

FLOOR LOADING.

Floor loading is the weight of a load divided by the area of the floor upon which the weight is placed. Specific aircraft TO data (–9 or –5) will usually specify floor loading limits and total load capacity for various compartments of the aircraft.

FORM B.

See AIRCRAFT WEIGHING RECORD.

FORM F.

See WEIGHT AND BALANCE CLEARANCE FORM.

FORWARD CENTER OF GRAVITY LIMIT.

The forward center of gravity limit is the most forward permissible aircraft cg location for a specific weight and configuration.

FULCRUM.

A fulcrum is a pivot or support about which items can be balanced or rotated.

FUSELAGE STATION.

Fuselage stations are reference locations measured in the longitudinal direction (forward or aft) from a reference datum which is usually well forward of the aircraft.

GROSS WEIGHT.

Gross weight is the total weight of the aircraft, including its contents and externally mounted items, at any time. The gross weight is continually changing throughout flight and/or ground operations.

INDEX.

See LOAD ADJUSTER INDEX.

JIG POINTS.

A jig point is a hole, fitting, or other fixture, which is the same known distance from each reference datum for all aircraft of the same model designation.

LANDING GROSS WEIGHT.

Landing gross weight is the weight of the aircraft, its contents and external items when the aircraft lands. It is also known as landing weight.

LEMAC.

LEMAC is an abbreviation for Leading Edge of the Mean Aerodynamic Chord. The LEMAC is usually identified as a fuselage station.

LEVELING LUGS.

Leveling lugs are fixtures attached to the aircraft to support a spirit level or inclinometer when leveling the aircraft.

LEVELING PLATE.

A leveling plate is a target with index markings which is attached to the aircraft and is used with a plumb bob when leveling the aircraft.

LIMITING WING FUEL ALLOWABLE GROSS WEIGHT.

Limiting wing fuel allowable gross weight is a weight above which any additional load must be fuel carried in the wing.

LOAD ADUSTER.

A load adjuster is a slide rule type mechanical balance computer.

LOAD ADJUSTER INDEX.

A load adjuster index is a number, which represents moment on the aircraft load adjuster and, in conjunction with aircraft weight or index formula, permits cg calculations.

LOADING CONTROL.

Loading Control, as used in weight and balance, is the use of weight and balance forms and loading data to ensure that the aircraft weight, cg, and any other loading limits are not exceeded during flight or ground operations.

LOADING DATA.

Loading Data is part of the aircraft –5 series TO. It contains instructions for aircraft actual weighing, aircraft diagrams, loading limits, general instructions affecting aircraft loading, and the weight, arm and moment/index information necessary to perform loading control.

LOADING LIMITS.

Loading limits are restrictions, such as permissible center of gravity range, floor loading, compartment capacity, and gross weight, beyond which aircraft loading is not permitted.

MAC.

MAC is an abbreviation for Mean Aerodynamic Chord. The MAC is usually stated in inches.

MAINTAINING.

Assuring correctness of the weight and balance manual, verifying data in the document is correct, assuring entries are proper and the manual is stored in accordance with TO 1–1B–50.

MAXIMUM GROSS WEIGHT.

See ALLOWABLE GROSS WEIGHT.

MAXIMUM ZERO FUEL WEIGHT (MZFW).

Maximum Zero Fuel Weight is the maximum permissible weight of the loaded aircraft before any usable fuel is added.

MEAN AERODYNAMIC CHORD

The Mean Aerodynamic Chord, or MAC, is an engineering term which represents an airfoil's chord in aircraft design. As such, it is a constant length, which is also used in the calculation of cg location in terms of percent MAC.

MOMENT.

Moment is a measure of the rotational tendency of a weight about a point. The moment of an item is the item's weight multiplied by its arm.

MOMENT ARM.

See ARM.

NEGLIGIBLE CHANGE.

Negligible change, unless specified in the aircraft –5 series TO, is any weight change of 0.1 percent of basic weight or less and/or any moment change which moves the cg 0.1 percent of the MAC, 0.1 inch for rotor–craft, or less.

OPERATING WEIGHT.

Operating weight is the sum of aircraft basic weight and such things as crew, crew baggage, steward equipment, emergency equipment, special mission fixed equipment, pylon and racks not in basic weight, and other non–expendable items.

OPERATING WEIGHT EMPTY/OPERATING EMPTY WEIGHT.

Operating weight empty and operating empty weight are variously defined civil aviation terms which differ from and are not to be confused with the Air Force term operating weight.

PAYLOAD.

Payload is any item, which is being transported and is directly related to the purpose of the flight as opposed to items that are necessary for the flight operation. Payload can include, but is not limited to, passengers, cargo, passenger baggage, ammo, internal and external stores, and fuel which is to be delivered to another aircraft or site. Payload may or may not be expended in flight.

PERCENT MAC (%MAC).

Percent MAC expresses a location as a percentage of the Mean Aerodynamic Chord (MAC).

PERMANENT BALLAST.

Permanent ballast is ballast which is required to be in the aircraft at all times and is a Chart A item.

PERMISSIBLE GROSS WEIGHT.

See ALLOWABLE GROSS WEIGHT.

RECORD OF WEIGHT AND BALANCE PERSONNEL.

The Record of Weight and Balance Personnel, DD FORM 365, is the form used to provide a permanent continuous record of weight and balance personnel responsible for maintaining the aircraft weight and balance handbooks.

REFERENCE DATUM.

A reference datum is a zero reference position from which distances are measured. Aircraft have three zero reference datum from which aircraft locations are measured in the longitudinal (using fuselage station), lateral (using buttlines), and vertical (using waterlines) directions.

REPRESENTATIVE AIRCRAFT.

A representative aircraft is one chosen as being typical of a number of aircraft of the same Model/Design with similar structure, systems, and equipment configurations.

SCALE CORRECTION FACTOR.

A scale correction factor is used to modify weighing scale readings because of inherent inaccuracies of the scale. Such factors may be, but are not limited to: calibration correction factors with the use of mechanical scales, load cell correction factors when the load cell readings do not return to zero after unloading with the use of electronic scales, or gravitation correction factors which depend upon the latitude of the earth. Refer to the scale's applicable 35B2 series TO for the appropriate factors.

SERVICE WEIGHT PICK–UP.

Service weight pick–up is the known and unknown weight change due to items such as repairs, modifications, wear, dirt, moisture, and unaccountable weight.

SIMPLIFIED MOMENT.

Simplified moment is a moment divided by an established constant such as 100, 1000, 10,000, or 100,000.

TAKEOFF GROSS WEIGHT.

Takeoff gross weight is the gross weight of the aircraft at the time the aircraft becomes airborne.

TARE.

Tare is the weight of equipment necessary for weighing the aircraft, such as chocks, blocks, slings, and jacks, which is included in the scale reading but is not part of the aircraft weight. It also can include a Scale Correction Factor.

TEMPORARY BALLAST.

Temporary ballast is used to replace missing items, such as crew members, armament, and equipment, in order to maintain the aircraft cg within limits and/or to simulate a specific aircraft configuration.

TRAPPED FUEL.

Trapped fuel is the fuel that remains in an aircraft after utilizing applicable TOs to defuel the aircraft and drain individual tanks and lines.

UNACCOUNTABLE WEIGHT.

Unaccountable weight is any change in basic weight, which is not reflected by an entry in the Chart C.

UNUSABLE FUEL.

Unusable fuel is the fuel remaining in the aircraft after engine fuel starvation when the aircraft is in the specified flight attitude.

WATERLINE.

Waterlines are locations in the vertical (up and down) direction measured from a reference datum which is usually well below the aircraft.

WEIGHING REACTION POINTS.

Weighing reaction points are those points upon which the aircraft weight is supported during weighing.

WEIGHT AND BALANCE AUTHORITY.

Person who has the responsibility to ensure the weight and balance work is complete and correct.

NOTE

The Weight and Balance Authority for the unit organization is directed by the MAJCOM. For ALCs and Contractors, the Weight and Balance Authority is the person or persons designated and empowered with the authority of the organizational commander under which weight and balance functions. The Weight and Balance Authority for the ALC or contractor must have graduated from an AETC approved Weight and Balance course of instruction. Exceptions to this requirement must be approved by ASC/ ENFSS. The authority's duty is to ensure weight and balance work is complete, up to date, and correct in accordance with TO 1–lB–50, appropriate, –5 TOs, appropriate regulations, and appropriate specifications.

WEIGHT AND BALANCE CLEARANCE FORM.

The WEIGHT AND BALANCE CLEARANCE FORM, DD FORM 365–4, is referred to as Form F. Tactical and Transport Form Fs record weight, moment or index, and cg calculations to ensure the aircraft remains within its weight and balance limitations.

WEIGHT AND BALANCE HANDBOOK.

An aircraft weight and balance handbook is a continuous and permanent record of weight and balance of a particular aircraft.

WEIGHT AND BALANCE TECHNICIAN/ PERSONNEL.

Qualified person assigned to weight and balance work.

WEIGHT EMPTY.

Weight empty is an engineering term, which is defined for aircraft design and does not affect operational activities. It is the weight of the aircraft, complete by model design definitions, dry, clean, and empty except for fluids in closed systems such as a hydraulic system.

ZERO FUEL WEIGHT.

Zero Fuel Weight is the weight of the loaded aircraft without any usable fuel. See also Maximum Zero Fuel Weight.

TO 1X–XXX–5, BASIC WEIGHT CHECKLIST AND LOADING DATA.

TO 1X–XXX–5, known more commonly as the aircraft –5 series TO, contains Charts A and E for a particular aircraft –5 series TO, when combined with a completed Charts and Forms, becomes a particular aircraft Weight and Balance Handbook. An example of an aircraft –5 series TO would be TO 1B–52G–5 for the B–52G aircraft.

TO 1X–XXX–6, SCHEDULED INSPECTION AND MAINTENANCE REQUIREMENTS.

TO 1X–XXX–6, more commonly known as the aircraft –6 TO, is the TO containing inspection and maintenance requirements and intervals for a particular aircraft. Weighing intervals are frequently, but not always, contained in the aircraft –6 TO. An example of an aircraft –6 TO is TO 1A–10A–6 for the A–10A aircraft.

TO 1X–XXX–9, LOADING INSTRUCTIONS.

TO 1X–XXX–9, commonly known as the aircraft –9 TO, is the TO which contains loading instructions for a particular aircraft. Usually, only cargo type aircraft have –9 TOs. An example is TO 1C–135A–9 for the C–135 aircraft.

TO 35B2/3 SERIES, AIRCRAFT HANDLING AND WEIGHING EQUIPMENT.

The 35B2/3 series is a series of TOs, each covering a specific piece of aircraft weighing or handling equipment, such as an electronic weighing kit. Instructions for use, as well as maintenance and overhaul instructions, may be contained in a 35B2/3 series TO.

TO 00–5–1, AIR FORCE TECHNICAL ORDER SYSTEM.

TO 00–5–1 is the TO that presents instructions and procedures for the USAF Technical Order System. Any matters concerning TOs, their use, or methods to correct TO errors are contained in TO 00–5–1.

AFMAN 37–139, DISPOSITION OF AIR FORCE DOCUMENTATION.

AFMAN 37–139 contains policies, procedures, responsibilities, and standards for disposition of USAF weight and balance data.

AFR/MCR/ANGR/AFRES 21 Series, MAINTENANCE MANAGEMENT.

AFR/MCR/ANGR/AFRES 21 Series establishes the maintenance management system for the USAF. AFR/MCR/ANGR/AFRES 21 Series, contains information on Quality Assurance, the operational level group tasked with managing the weight and balance program for all assigned aircraft.

AFI 11–215, FLIGHT MANUALS PROGRAM.

AFI 11–215 establishes management procedures relating to flight manuals. AFI 11–215 identifies the aircraft –5 series TOs as part of the Flight Manuals Program.

APPENDIX B
SAMPLE CHARTS AND FORMS

B–1. The following examples represent the proper completion and use of the DD 365 series charts and forms, as well as the AWBS, to complete the Weight and Balance Handbook. The DD 365 Series forms are shown in Figures B–1 through B–7. The equivalent AWBS forms are shown in Figures B–8 through B–13.

B–1.1. On 19 February 1989, a General Dynamics F–1XA received a production inventory and weighing under the responsibility of Mr. John Brown (see figures B–1 and B–8). Mr. Brown completed the first check mark column of the Chart A (see figures B–2 and B–9), derived from weighing the basic weight condition of 15,513 pounds, 50,417 inch–pounds/100, and a balance arm of 325.0 inches (see figures B–3 and B–9), and entered the basic weight condition into the Chart C (see figures B–4 and B–11). Note that because the aircraft was weighed completely dry (no trapped fuel) only the unusable fuel was added to COLUMN II and no fuel entry was made to COLUMN I.

B–1.1.1. The F–1XA was delivered to Hill AFB on 12 March 1989. SSgt Jim Green was given the responsibility for maintaining this aircraft's Weight and Balance Handbook (see figure B–1 and B–8). He performed the acceptance inventory upon delivery while completing the second check mark column of the Chart A (see figures B–2 and B–9).

B–1.1.2. On 30 March l989, an equipment change was made (see figures B–4 and B–11). Notes of addition/removal were made in the Chart A (see figures B–2 and B–9) and, since the weight change was less than 0.1 percent of the basic weight and cg change was less than 0.1 percent MAC, no new basic weight condition was calculated (see figure B–4).

B–1.1.3. On 27 June 1989, the engine was changed, and TCTO 1F–1XA–600 (20 Aug 88) was incorporated. Since weight, arm, and moment data for the change was available, a Chart C entry was made and no actual weighing was required. However, the change caused a weight increase of more than 0.1% of the basic weight, so a new basic weight condition of 15,573 pounds, 50,679 inch–pounds/100, and a balance arm of 325.4 inches was calculated and entered into the Chart C (see figure B–4).

B–1.1.4. Using CHART E LOADING DATA from TO 1F–1XA–5 (see figure B–5), a Form F was completed for the air–to–air mission on 27 August 1991 (see figures B–6 and B–12). A TAKEOFF CONDITION with oil, pilot, chaff/flares, ammo, missiles, and internal and external fuel loads was calculated and found to be within the prescribed weight and cg limits. The word oil, the number of gallons, the weight, and the simplified moment of the oil were included, as required by paragraph 5.6.3.3, because the F–1XA –5 said oil was not part of its basic weight. In the manual system, taxi and takeoff fuel and gear retraction were considered in the Ref 11 CORRECTIONS. In the AWBS, they are considered a negative value under Fuel for fuel and the retraction is considered in the program setup. A gear–up takeoff condition was calculated in Ref 12 TAKEOFF CONDITION (Corrected) and was found to be within the prescribed weight and cg limits. For the LANDING CONDITION, the loads of the takeoff fuel, missiles, external fuel hardware (B–1 configuration) and half the live ammo were deleted. Also, the gear extension moment and approximately 106 gallons of landing fuel were added. The estimated LANDING CONDITION was calculated and found to be within the prescribed weight and cg limits. Both the most forward and most aft cg conditions were calculated and found to be within the prescribed cg limits.

B–1.1.5. Because unsatisfactory flight characteristics were reported whose cause could not be satisfactorily identified, the F–1XA was weighed on September 1991 (see figures B–7 and B–13). The weighing inventory was performed using the third record of checking column on the Chart A. The new inventory was compared with the last completed inventory, noting the changes of items installed in the aircraft. The Chart C was reviewed to assure that the weight and moment corrections were made for those items added and removed since the last inventory, using the dates in the Chart A items and location columns as an aid in locating the item on the Chart C. After verifying that the correct Chart C entry had been made, a check was placed in the third record of checking CHART C ENTRY column on the Chart A. The weighing was accomplished using jacks and load cells at the wing and nose jack points. The dimensions E and F were taken from TO 1F–1XA–5 as were the draining, leveling, and weighing instructions. The new basic weight condition of 15,572 pounds, 50,686 inch–pounds/100, and an arm of 325.5 inches was derived and entered into the Chart C (see figures B–4 and B–11).

RECORD OF WEIGHT AND BALANCE PERSONNEL	FOR USE WITH T.O. 1-1B-40, NAVAIR 01-1B-40, AND TM-55-342-23	Form Approved OMB No. 0704-0188

Public reporting burden for this collection of information is estimated to average 10 minutes per response, including the time for reviewing instructions, searching existing data sources, gathering and maintaining the data needed, and completing and reviewing the collection of information. Send comments regarding this burden estimate or any other aspect of the collection of information, including suggestions for reducing this burden, to Washington Headquarters Services, Directorate for Information Operations and Reports, 1215 Jefferson Davis Highway, Suite 1204, Arlington, VA 22202-4302, and to the Office of Management and Budget, Paperwork Reduction Project (0704-0188), Washington, DC 20503.

MODEL/DESIGN	SERIAL NUMBER
F-1XA	78-001

NAME (*Last, First, Middle Initial*)	GRADE, RATE, OR RANK	WHERE AND WHEN QUALIFIED	STATION	DATE ASSIGNED (YYMMDD)	DATE RELIEVED (YYMMDD)
Brown, John, A.	CON-TRACTOR	GEN. DYN/FT. WORTH OCT. 68	GENERAL DYNAMICS FORT WORTH	890219	890312
Green, Jim, B.	SSGT	CHANUTE AFB Il. MAY. 75	HILL AFB	890312	

DD Form 365, FEB 90 *Previous editions are obsolete.* 138.03

Figure B–1. Sample DD Form 365–1

From Approved. OMB No. 0704-0188

FOR USE WITH T.O. 1-1B-40, NAVAIR 01-1B-40 AND TM-55-1500-342-23

CHART A – BASIC WEIGHT CHECKLIST RECORD

Public reporting burden for this collection of information is estimated to average 10 minutes per response, including the time for reviewing instructions, searching existing data sources, gathering and maintaining the data needed, and completing and reviewing the collection of information. Send comments regarding this burden estimate or any other aspect of the collection of information, including suggestions for reducing this burden, to Washington Headquarters Services, Directorate for Information Operations and Reports, 1215 Jefferson Davis Highway, Suite 1204, Arlington, VA 22202-4302, and to the Office of Management and Budget, Paperwork Reduction Project (0704-0188), Washington, DC 20503.

PAGE OF PAGES | MODEL/DESIGN/SERIES | SERIAL NUMBER

RECORD OF CHECKING (Enter Date) (YYMMDD)

COMPARTMENT AND ITEM NUMBER	ITEMS AND LOCATION (Grouped by compartment)	WEIGHT	ARM	MOMENT (Enter constant used below line)	1 GEN. DYN/ FT. WORTH 890219 IN AIRCRAFT	1 CHART C ENTRY	2 HILL AFB 890312 IN AIRCRAFT	2 CHART C ENTRY	3 HILL AFB 910905 IN AIRCRAFT	3 CHART C ENTRY	4 IN AIRCRAFT	4 CHART C ENTRY	5 IN AIRCRAFT	5 CHART C ENTRY	6 IN AIRCRAFT	6 CHART C ENTRY	7 IN AIRCRAFT	7 CHART C ENTRY	8 IN AIRCRAFT	8 CHART C ENTRY	9 IN AIRCRAFT	9 CHART C ENTRY
D-	(INLET, NOSE WHEEL AND LOWER FUSELAGE (BELOW WL91) (110.5-277.9 inches)																					
D-1	Inverter (2) C8715/16VE026	12	114.5	14	✓		✓		✓													
D-2	Battery (2) - Flight Cont. Pwr. Supply C8715	9	114.5	10	✓		✓		✓													
D-3	Interference Blanker 16VE019001	7	116.0	8	✓		✓		✓													
D-4	Programmer - ALE 40 16VE018001	3	149.0	4	✓		✓		✓													
D-5	Computer - Fire Control 16VE015001	29	163.0	47	✓		✓		✓													
D-6	Mount Fire Control Computer 16VE015	4	163.0	7	✓		✓		✓													
D-7	Antenna - UHF/Low Band 16VE078	2	166.4	3	✓		✓		✓													
D-8	Video Recorder (Alt. D-9) (NA)	50	168.0	84	0		0		0													
D-9	Recorder - Signal Data (SLM) (ALT D-8) 60-6437	25	168.0	42	0		0		0													
D-10	Rcvr/Trans - TACAN RT1159/A	30	172.3	52	✓		✓		✓													
D-11	Adapter - Rcvr/Trans - TACAN 81-0284	5	172.3	9	✓		✓		✓													
D-12	Mount - TACAN MT/R81-4557	7	172.5	12	✓		✓		✓													
D-13	Converter - Signal Data (SLM) (Out 79 Mar 30)	8	173.0	14	✓		✓		0	✓												
D-14	Antenna - C/D Band AS-3262/ALR	2	178.8	4	✓		✓		✓													
D-15	Light Formation (2) 16VE0820011	3	180.0	5	✓		✓		✓													
D-16	Processor CM479/ALR69	25	181.5	45	✓		✓		✓													
D-17	Rcvr/Trans - AGIFF 16VE033001	15	183	27	✓		✓		✓													
D-18	Wheel - Nose Gear 41-1401	12	185.7	22	✓		✓		✓													
D-19	Tire - Nose Gear 41-1402	15	185.7	28	✓		✓		✓													
D-20	Kit - 1A T/SEC (In 79 Mar 30) (GFE)	8	253.0	20	0		0		✓	✓												
D-21	Mount Kit - 1A T/SEC MT4579/V	2	253.0	5	✓		✓		✓													
D-22	Rcvr/Controller - Threat Warning CM10323/ALR69	19	257.8	49	✓		✓		✓													
D-23	Rcvr - Threat Warning R2094/ALR69	15	257.8	39	✓		✓		✓													
D-24	Secure Voice KY28(BASIC)KY58	17	258.0	44	✓		✓		✓													

DD Form 365-1, FEB 90 — Previous editions are obsolete. — 355/030

Figure B-2. Sample DD Form 365-1 (Chart A)

FORM B – AIRCRAFT WEIGHING RECORD	FOR USE WITH T.O. 1-1B-40, NAVAIR 01-1B-40, AND TM-55-1500-342-23	Form Approved OMB No. 0704-0188

Public reporting burden for this collection of information is estimated to average 10 minutes per response, including the time for reviewing instructions, searching existing data sources, gathering and maintaining the data needed, and completing and reviewing the collection of information. Send comments regarding this burden estimate or any other aspect of the collection of information, including suggestions for reducing this burden, to Washington Headquarters Services, Directorate for information Operations and Reports, 1215 Jefferson Davis Highway, Suite 1204, Arlington, VA 22202-4302, and to the Office of Management and Budget, Paperwork Reduction Project (0704-0188), Washington, DC 20503.

DATE WEIGHED (YYMMDD)	MODEL/DESIGN/SERIES	SERIAL NUMBER
910905	F-1XA	78-001

PLACED WEIGHED	WEIGHT AND BALANCE TECHNICIAN (Last, First, M.I.)	DUTY PHONE NUMBER
HILL AFB	GREEN, JIM B. SSGT	987-6543

REACTION (Wheels, jackpoints, etc.)	SCALE READING	CORRECTIONS	NET WEIGHT	ARM	MOMENT
LEFT MAIN	6555	-1	6554		
RIGHT MAIN	6584	-1	6583		
SUB – TOTAL (Both main)			13137	E 374.3	4917179
NOSE OR TAIL	2640	0	2640	F 88.0	232320
TOTAL (as weighed) Not to be posted on Chart C			15777	326.4	5149499

MEASUREMENTS

B= _____ the distance from the jig point, to the center of the main reactions. Obtain by measurement.

I= _____ the distance from the reference datum to the jig point of the aircraft, from which a plumb bob can be dropped to the ground. Obtain from the aircraft diagram in Chart E.

E= 374.3 [1] the distance from the reference datum to the center line of the main reactions.
E= I+B
E= I–B (If the jig point is aft of the center line of the main reactions.)

D= _____ the distance between the main and nose or tail reaction. Obtain by measurement.

F= 88.0 [1] the distance form the reference datum to the center line of the nose or tail reaction.
F= E–D (for nose reaction)
F= E+D (for tail reaction)

CORRECTIONS	LEFT MAIN	RIGHT MAIN	NOSE OR TAIL
CALB CORR			
SCALE CORR	-1	-1	0
TEMP ____ [2]			
EQUIP			
OTHER			
TOTAL	-1	-1	0

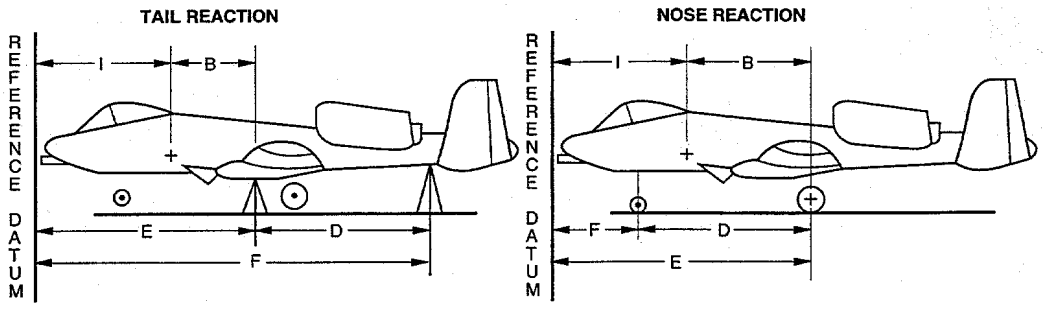

DIAGRAMS FOR MEASURING VARIOUS TYPES OF REACTIONS TO DETERMINE ARM OF SUPPORT POINTS.
See Aircraft Chart E's for specific weighing instructions.

[1] *Check dimensions E and F against approximate dimensions listed on Chart E.*
[2] *Enter temperature at time of weighing.*

DD Form 365-2, FEB 90 *Previous editions are obsolete.* 489/036

Figure B–3. Sample DD Form 365–2 (Form B) (Sheet 1 of 2)

DESCRIPTION	NET WEIGHT	ARM	MOMENT	[1] INDEX OR MOM/
TOTAL *(As weighed)* *(From front side)*	15777	326.4	5149499	
OIL	-24	375.0	-9000	
TOTAL OF ITEMS WEIGHED BUT NOT PART OF BASIC WEIGHED *(From Column I below)*	-270		-97440	
TOTAL OF BASIC WEIGHT ITEMS NOT IN AIRCRAFT WHEN WEIGHED *(From Column II below)*	+89		+25612	
BASIC AIRCRAFT *(Post to Chart C)*	15572	325.5	5068671	50686

COLUMN I				COLUMN II			
ITEMS WEIGHED BUT NOT PART OF BASIC WEIGHT	WEIGHT	ARM	MOMENT	BASIC WEIGHT ITEMS NOT IN AIRCRAFT WHEN WEIGHED	WEIGHT	ARM	MOMENT
GEAR RESTRAINTS				Survival Gear	15	128.8	1932
NOSE	5	185.7	929	Unusable Fuel	74		23680
MAIN	10	343.1	3431				
TRAPPED FUEL	255		93080				
TOTAL	270		97440	**TOTAL**	89		25612

REACTIONS USED

WING AND NOSE JACK POINTS

TYPE SCALE REVERE
SERIAL NUMBER 13876
CALIBRATION DATE (YYMMDD) 901214
CALIBRATED ACCURACY 0.1%

REMARKS

1) Basic Weight DETERMINED AT 0° (LEVEL) AIRCRAFT ATTITUDE

2) Aircraft WAS SUPPORTED BY THREE B-6 TYPE JACKS.

3) Aircraft WAS WEIGHED IN CLOSED HANGAR.

[1] *Enter constant used*

DD Form 365-2 Reverse, FEB 90

Figure B–3. Sample DD Form 365–2 (Form B) (Sheet 2 of 2)

CHART C – BASIC WEIGHT AND BALANCE RECORD

FOR USE WITH T.O. 1-1B-40, NAVAIR 01-1B-40 AND TM-55-1500-342-23

Form Approved OMB No. 0704-0188

Public reporting burden for this collection of information is estimated to average 10 minutes per response, including the time for reviewing instructions, searching existing data sources, gathering and maintaining the data needed, and completing and reviewing the collection of information. Send comments regarding this burden estimate or any other aspect of the collection of information, including suggestions for reducing this burden, to Washington Headquarters Services, Directorate for Information Operations and Reports, 1215 Jefferson Davis Highway, Suite 1204, Arlington, VA 22202-4302, and to the Office of Management and Budget. Paperwork Reduction Project (0704-0188), Washington, DC 20503.

MODEL/DESIGN/SERIES: F-1XA

SERIAL NUMBER: 78-001

PAGE NUMBER: 1

DATE (YYMMDD)	ITEM NUMBER IN	ITEM NUMBER OUT	DESCRIPTION OF ARTICLE OR MODIFICATION	WEIGHT CHANGE ADDED(+) WEIGHT	ADDED(+) ARM	ADDED(+) MOMENT[1]/100	REMOVED (–) WEIGHT	REMOVED (–) ARM	REMOVED (–) MOMENT[1]/100	CURRENT TOTAL BASIC AIRCRAFT WEIGHT	MOMENT[1]/100	ARM OR INDEX[2]
890219			Basic Weight and Moment as weighed (See Column 1, Chart A)							15513	50417	325.0
890330	D-20		Kit-1A T/Sec	8	253.0	20						
"		D-13	Converter - Signal Data				8	173.0	14			
890330			TOTAL	8	253.0	20	8	173.0	14			
890330			Overall Weight and Moment Change	0		6						
890627		✓	Engine S/N E681105 removed				303.7	427.1	129.71			
"	✓		Engine S/N E703031 installed	306.1	426.9	130.67						
"	✓		CTR FUS Blkhd TCT01F-1XA-600 20 AUG 88	3.6	443.9	1.60						
890627			TOTAL	309.7		132.33	303.7		129.71			
890627			Overall Weight and Moment Change	6.0		2.62						
890627			Basic Weight and Moment as Calculated							15573	50679	325.4
910905			Basic Weight and Moment as Weighed							15572	50686	325.5

[1] Enter constant used below line. [2] Load adjuster index.

DD Form 365-3, FEB 90 — Previous editions are obsolete. — 209/030

Figure B-4. Sample DD Form 365-3 (Chart C)

Table 2-5. Useful Load Miscellaneous

FLIGHT CREW

WEIGHT (LBS)	MOMENT / 100
145	200
155	213
(1) 165	227
175	241
185	255
195	269
205	282
(2) 215	296
225	310
235	324

CREW MOMENT ARM–137.7

(1) - 5TH PERCENTILE
(2) - 95TH PERCENTILE

ENGINE OIL (USABLE)

GALLONS (APPROX)	LEVEL	WEIGHT (LBS)	MOMENT / 100
0.8	1/4	6	23
1.6	1/2	12	45
2.6	3/4	20	75
3.1	FULL	24	90

OIL MOMENT ARM–375.0

PAVE PENNY (FUSELAGE MOUNTED)

DESCRIPTION	WEIGHT	ARM	MOMENT / 100
ADAPTER	25	189.6	47
SENSOR	32	179.4	57
INTERFACE UNIT	26	204.4	53
INSTALLATION TOTAL	83	189.2	157

PEN AIDS

LOADING ITEM	UNIT WEIGHT	EXPENDABLE		NON-EXPENDABLE		TOTAL AIRPLANE	
		WEIGHT (LBS)	MOMENT / 100	WEIGHT (LBS)	MOMENT / 100	WEIGHT (LBS)	MOMENT / 100
CHAFF MODULE (30 PKGS)	10	8	37	2	9	10	46
FLARE MODULE (15 PKGS)	14	11	50	3	14	14	64

NOTES: 1. PEN AIDS MOMENT ARM—457.0
2. MODULE(S) MAY BE LOADED AT EITHER LOCATION, RIGHT OR LEFT.

WBE-76-513

Figure B–5. Sample F–1X Chart E (Sheet 1 of 6)

Table 2-6. Armament System

THE F-1XA VULCAN ARMAMENT SYSTEM FEATURES A DOUBLE ENDED LINKLESS AMMUNITION FEED SYSTEM WHICH RETURNS SPENT CASES AND UNFIRED ROUNDS TO THE AMMUNITION DRUM RATHER THAN DISCARDING THEM OVERBOARD OR INTO A SEPARATE CONTAINER. THE SYSTEM CAPACITY IS 511 ROUNDS. THE EXPENDABLE CAPACITY IS 511 ROUNDS (157 POUNDS, 400 INCH POUNDS/100).

THIS TABLE SHOWS THE WEIGHT OF THE EXPENDABLE LIVE ROUNDS VS SPENT CARTRIDGES. CLEARED ROUNDS ARE NOT PART OF THE DATA, AND ARE NOT CONSIDERED BECAUSE OF THE UNPREDICTABLE NATURE OF THEIR OCCURENCE.

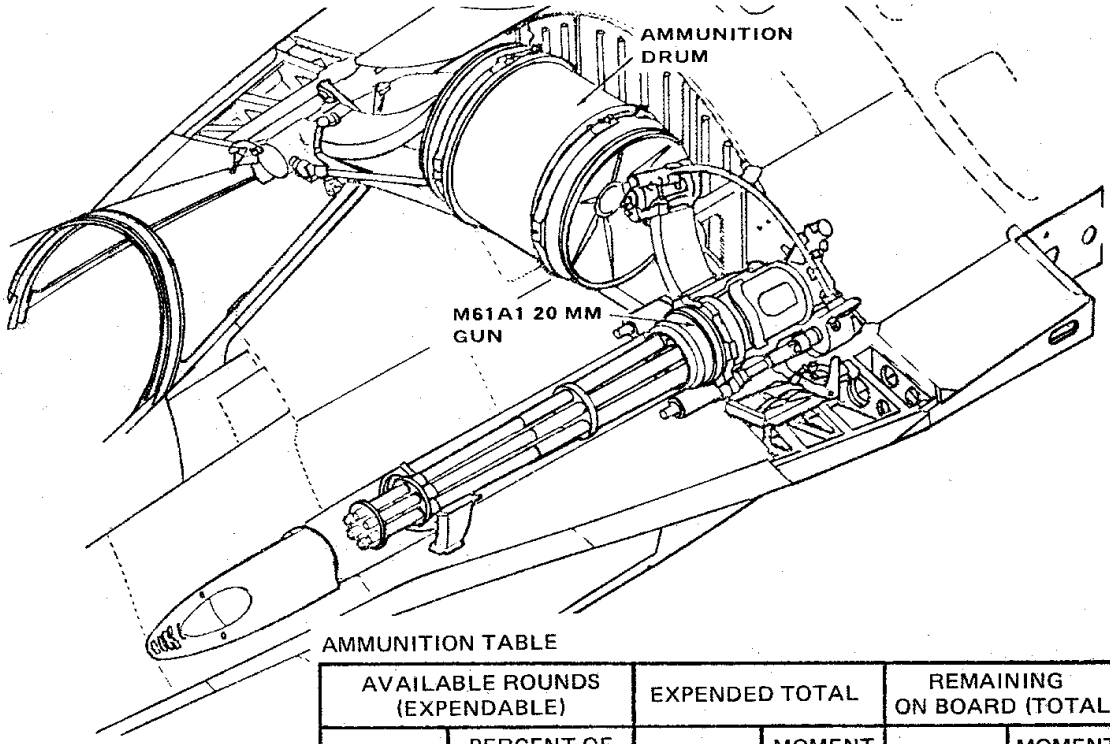

AMMUNITION TABLE

AVAILABLE ROUNDS (EXPENDABLE)		EXPENDED TOTAL		REMAINING ON BOARD (TOTAL)	
NUMBER	PERCENT OF CAPACITY	WEIGHT	MOMENT/100	WEIGHT	MOMENT/100
511	100%	0	0	287	731
500		-3	-8	284	723
450		-18	-46	269	685
400		-34	-87	253	644
383	75%	-39	-99	248	632
350		-50	-127	237	604
300		-65	-166	222	565
256	50%	-79	-201	208	530
200		-96	-245	191	486
150		-111	-283	176	448
128	25%	-118	-301	169	430
100		-127	-323	160	408
50		-142	-362	145	369
25		-150	-382	137	349
0		-157	-400	130	331

*RETAINED CASES (511) ONLY

NOTES:

1. LIVE ROUND WEIGHT IS 0.562 POUND EACH.
2. RETAINED CASE WEIGHT IS 0.254 POUND EACH.
3. MOMENT ARM FOR AMMUNITION IS FS254.70.
4. USE EXPENDED WEIGHT AND MOMENT/100 TO CHECK AFT C G EFFECT.
5. CHECK REMAINING ROUNDS TOTAL (ON STORES CONTROL PANEL) PRIOR TO MAKING DD365-4 ENTRY.

WBE-16-514

Figure B–5. Sample F–1X Chart E (Sheet 2 of 6)

Table 2-9. External Stores Loading - Missiles

DESCRIPTION	UNIT WEIGHT	QTY	WEIGHT* (LBS)	ARM (FS)	MOMENT*/100	
AIR-TO-AIR						
BL 180 (WING TIP–STA 1 & 9)						
AIM-9J SIDEWINDER	169	2	338	362.9	1227	AIM-9J
INSTALLATION TOTAL		2	338	362.9	1227	
BL180 (WING TIP–STA 1 & 9)						
AIM-9L SIDEWINDER	195	2	390	363.8	1419	AIM-9L
INSTALLATION TOTAL		2	390	363.8	1419	
NOTE: TIP LAUNCHERS INCLUDED IN BASIC WEIGHT (CHART "A" ITEM W-1)						
BL 157 (PYLON STATION 2 & 8)						
AIM-9J SIDEWINDER SUSPENSION HARDWARE (PG 2-16)	169	2	338 A-1	353.3	1194	AIM-9J
INSTALLATION TOTAL		2	338	353.3	1194	
BL 157 (PYLON STATION 2 & 8)						
AIM-9J SIDEWINDER SUSPENSION HARDWARE (PG 2-16)	195	2	390 A-1	353.4	1378	AIM-9L
INSTALLATION TOTAL			390	353.4	1378	
BL 120 (PYLON STATION 3 & 7)						
AIM-9L SIDEWINDER SUSPENSION HARDWARE (PG 2-16)	169	2	338 A-2	327.2	1106	AIM-9J
INSTALLATION TOTAL			338	327.2	1106	
BL 120 (PYLON STATION 3 & 7)						
AIM-9L SIDEWINDER SUSPENSION HARDWARE (PG 2-16)	195	2	390 A-2	328.2	1280	AIM-9L
INSTALLATION TOTAL		2	390	328.2	1280	
BL 120 (PYLON STATION 3 & 7)						
AIM-7F SUSPENSION HARDWARE (PG 2-17)			(PENDING)			AIM-7
INSTALLATION TOTAL						

*DOES NOT INCLUDE SUSPENSION HARDWARE WEIGHTS OR MOMENT/100. SEE REFERENCED PAGE FOR APPLICABLE DATA.

WBE-16-518

Figure B–5. Sample F–1X Chart E (Sheet 3 of 6)

Table 2-18. Internal Fuel (Normal Sequence)

INTERNAL FUEL TANK DATA (USABLE)

FUEL LOCATION (TANK)	GALLONS (APPROX)	ARM (FS)	FUEL POUNDS (AT 6.5 LBS/GAL)	FUEL POUNDS (AT 6.8 LBS/GAL)
FORWARD FUSELAGE	(470)		(3053)	(3195)
TANK F-1	297	215.0	1927	2016
TANK F-2	105	297.0	684	716
RESERVOIR (RIGHT)	68	326.0	442	462
AFT FUSELAGE	(424)		(2754)	(2882)
RESERVOIR (LEFT)	68	326.0	442	462
TANK A-1	356	389.5	2312	2419
WINGS	(176)	350.0	(1143)	(1196)
LINES	(3)	370.0	(22)	(23)
USABLE INTERNAL FUEL	1073	317.6	6972	7294

USABLE INTERNAL FUEL (NORMAL SEQUENCE/DISTRIBUTION)

SEQUENCE POINT	GALLONS REMAINING (APPROX)	AT 6.5 LBS/GAL WEIGHT (LBS)	AT 6.5 LBS/GAL MOMENT 100 (ARM VARIES)	AT 6.8 LBS/GAL WEIGHT (LBS)	AT 6.8 LBS/GAL MOMENT 100 (ARM VARIES)	FUEL CONDITION
A	1073	6972	22144	7294	23166	HLSO
		6600	20842	6902	21187	
		6300	19791	6589	19610	
B	897	5830	18143	6098	18977	WINGS EMPTY
		5500	17148	5753	17938	
		5200	16242	5440	16992	
	754	4900	15336	5127	16046	
		4600	14428	4814	15100	
		4300	13522	4502	14157	
		4000	12614	4182	13190	
	569	3700	11708	3869	12244	
		3400	10801	3556	11298	
		3100	9894	3244	10355	
		2800	8988	2931	9409	
	385	2500	8081	2618	8463	
		2200	7173	2298	7495	
C	304	1975	6494	2066	6973	F-1 EMPTY; AFT PARTIAL
		1600	5207	1673	5446	
D	185	1205	3851	1261	4033	AFT EMPTY; F2 PARTIAL MINIMUM LANDING
		900	2901	938	3025	
E	93	607	1988	635	2080	F2 EMPTY; RES (R) PARTIAL RES (L) FULL
F		321	1056	336	1105	RES (L) PARTIAL LINES
G	3	22	81	23	85	LINES FUEL ONLY

AIRCRAFT CG TRAVEL DUE TO INTERNAL FUEL CONSUMPTION

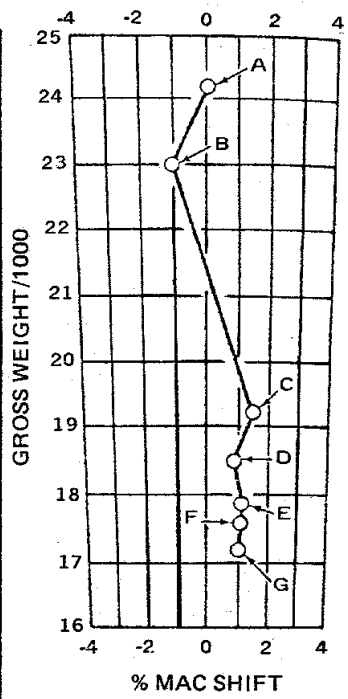

NOTES:
1. THE MAGNITUDE OF AIRCRAFT C G SHIFT DUE TO INTERNAL FUEL CONSUMPTION WILL DECREASE WITH AN INCREASE IN AIRCRAFT GROSS WEIGHT.
2. FUEL AT 6.5 LBS/GAL IS REPRESENTATIVE OF JP-4 FUEL 6.8 IS REPRESENTATIVE OF JP-5, JP-8, NATO, AND AVTUR FUELS.

WBE-16-528

Figure B–5. Sample F–1X Chart E (Sheet 4 of 6)

Table 2-19. External Fuel (Sheet 1)

EXTERNAL FUEL MOUNTING HARDWARE/TANK(S)

DESCRIPTION	UNIT WEIGHT	BL 71 (STA 4 & 6)				CENTERLINE (STA 5)				
		QTY	WEIGHT (LBS)	ARM (FS)	MOMENT / 100	QTY	WEIGHT (LBS)	ARM (FS)	MOMENT / 100	
FUEL PYLON	198	2	396	326.2	1288					B 1
370 GAL TANK	232	2	464	307.0	1424					
UNUSABLE FUEL	10		20	273.3	55					
INSTALLATION TOTAL "B-1"		2	(880)	314.4	(2767)					
PYLON TOTAL D	164					1	164	314.0	515	B 2
300 GAL TANK	340					1	340	326.5	1110	
UNUSABLE FUEL	12						12	290.0	35	
INSTALLATION TOTAL "B-2"						1	(516)	321.7	1660	

EXTERNAL FUEL (NORMAL SEQUENCE) – 300 GALLON TANK

USABLE FUEL – 300 GALLON (CENTERLINE)

GALLONS REMAINING (APPROX)	AT 6.5 LBS/GAL		AT 6.8 LBS/GAS		FUEL CONDITION
	WEIGHT (LBS)	(1) MOMENT / 100	WEIGHT (LBS)	(1) MOMENT / 100	
300	1950	6232	2040	6520	FULL
	1700	5433	1778	5683	
225	1463	4676	1530	4890	75% FULL
	1200	3835	1255	4011	
150	975	3116	1020	3260	50% FULL
	750	2397	785	2509	
75	488	1560	510	1630	25% FULL
	250	799	262	837	

AIRCRAFT CG TRAVEL DUE TO EXTERNAL FUEL CONSUMPTION

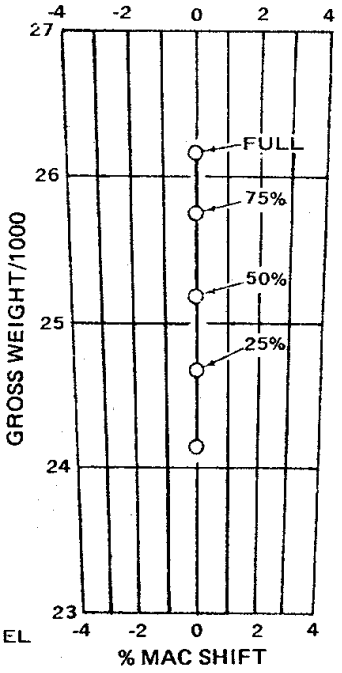

NOTES:

1. (1) CONSTANT FUEL ARM OF 319.61
2. NON-COMPARTMENTED TANK.
3. THE MAGNITUDE OF AIRCRAFT C G SHIFT DUE TO EXTERNAL FUEL CONSUMPTION WILL DECREASE WITH AN INCREASE IN AIRCRAFT GROSS WEIGHT.
4. FUEL AT 6.5 LBS/GAL IS REPRESENTATIVE OF JP-4 FUEL; 6.8 IS REPRESENTATIVE OF JP-5, JP-8, NATO AND AVTUR FUELS.

WBE-16-529

Figure B–5. Sample F–1X Chart E (Sheet 5 of 6)

Table 2-19. External Fuel (Sheet 2)

EXTERNAL FUEL (NORMAL SEQUENCE) - 370 GALLON TANKS

USABLE FUEL—370 GALLON WING TANKS (BL 71—STA 4 & 6)

SEQUENCE POINT	GALLONS REMAINING (APPROX)	AT 6.5 LBS/GAL		AT 6.8 LBS/GAL		FUEL CONDITION
		WEIGHT (LBS)	MOMENT / 100 (ARM VARIES)	WEIGHT (LBS)	MOMENT / 100 (ARM VARIES)	
A	740	4810	14487	5032	15156	FULL
		4600	13835	4812	14473	
	677	4400	13214	4603	13824	
		4200	12593	4394	13162	
	615	4000	11972	4185	12526	
		3800	11351	3975	11874	
	554	3600	10730	3766	11225	
		3400	10109	3557	10576	
	492	3200	9488	3348	9927	
		3000	8867	3138	9275	
		2800	8246	2929	8626	
B	404	2626	7706	2747	8061	CENTER EMPTY: FULL FWD & AFT
		2400	6893	2510	7208	
	338	2200	6173	2302	6459	
		2000	5454	2092	5704	
		1800	4734	1883	4952	
C	236	1534	3777	1605	3952	EMPTY AFT: FULL FWD
		1400	3447	1465	3607	
	105	1200	2954	1255	3090	
		1000	2462	1046	2575	
	123	800	1970	837	2061	
		600	1477	628	1546	
	62	400	985	418	1029	
		200	492	209	515	

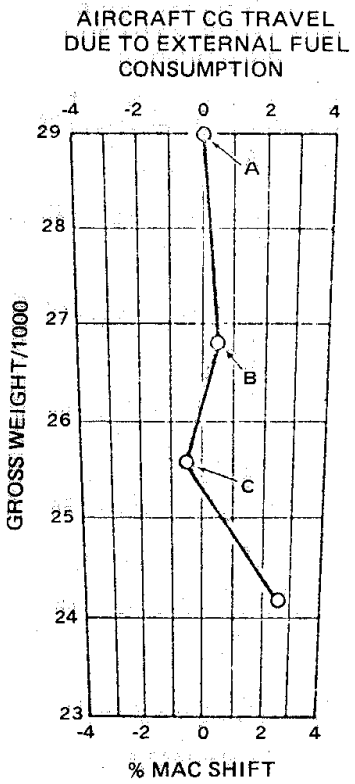

NOTES: 1. COMPARTMENTED TANK
2. FUEL SEQUENCE: CENTER BAY, AFT BAY, FORWARD BAY
3. THE MAGNITUDE OF AIRCRAFT C G SHIFT DUE TO EXTERNAL FUEL CONSUMPTION WILL DECREASE WITH AN INCREASE IN AIRCRAFT GROSS WEIGHT.
4. 6.5 LBS/GAL IS REPRESENTATIVE OF JP-4 FUEL; 6.8 IS REPRESENTATIVE OF JP-5, JP-8, NATO, AND AVTUR FUELS.

WBE-16-530

Figure B-5. Sample F-1X Chart E (Sheet 6 of 6)

WEIGHT AND BALANCE CLEARANCE FORM F-TACTICAL

(Use reverse for transport missions)

FOR USE WITH T.O. 1-1B-40, NAVAIR 01-1B-40, AND TM-55-1500-342-23

DATE (YYMMDD) 910827	AIRCRAFT TYPE F-1XA	FROM HILL AFB	HOME STATION HILL AFB
MISSION AIR TO AIR	SERIAL NO. 78-001	TO	PILOT L/C A.C. WATT

CORRECTION/MOST FWD/MOST AFT (Ref. 11)

COMPT	ITEM	CHANGES (+ OR –) WEIGHT	MOM/100
	Corrections		
	Taxi + To Fuel	-576	-1788
	Gear Retraction	0	-162
	TOTAL	-576	-1950
	Most Forward		
	Operating Wgt.	15814	51145
	AMMO 511 Rnds.	287	731
	Hardware "config B-1"	880	2767
	740 Gal. External	4810	14487
	897 Gal. External	5830	18143
	Gear Retraction	0	-162
	Minus Chaff/Flares	-24	-110
	Most Forward	27597	87001
		30.6%	MAC
	Most Aft		
	Operating Wgt.	15818	51145
	AIM-9J	338	1227
	AMM: 0 Live Rnds.	130	331
	304 Gal. External	1975	6494
	Most Aft	18257	59197
		37.7%	MAC
TOTAL WEIGHT ADDED		+	+
TOTAL WEIGHT REMOVED		–	–
NET DIFFERENCE (Ref. 11)			

REMARKS

Fuel loaded at 6.5 lb/Gal.
Landing Condition (Estimated)

(1) FUEL Approx. 106 Gal (688 lb.)

(2) AMMO 1/2 Live Rnds. Remaining (208 lbs.)

(3) External Fuel Tanks-Pylons Dropped
Zero Fuel Condition-36.6% MAC
Gear Down
Gear Retraction Moment = -16177
LEMAC = 276.4 in.
MAC = 126.9 in.

REF	ITEM	WEIGHT	MOM/100
1	BASIC AIRCRAFT (From Chart C)	15573	50679
2	OIL (3.1 Gal)	24	90
3	DISTRIBUTION OF LOAD		
	COMPT / CREW NO. / CREW WEIGHT / CARGO/MISC		
	Pilot / 1 / 193	193	266
	24 / Chaff/Flares	24	110
4	OPERATING WEIGHT	15814	51145
5	AMMO: 511 Rnds. (20 mm)	287	731
6	BOMBS, MISSILES, ETC.: AIM-8J (2-TIP)	338	1227
7	FUEL: 1073 Gal Internal	6972	22144
	740 Gal External	4810	14487
	Hardware Config. "B-1"	880	2767
8	MISC. VARIABLES		
9	TAKEOFF CONDITION (Uncorrected)	21010	92501
10	TAKEOFF C.G. IN % M.A.C.	32.7% MAC Gear Down	
11	CORRECTIONS (if required)	-576	-1950
12	TAKEOFF CONDITION (Corrected)	20525	90551
13	TAKEOFF C.G. IN % M.A.C.	32.3% MAC Gear Up	
14	TAKEOFF FUEL	-11206	-34843
	LESS EXPENDABLES	-338	-1227
		-880	-2767
		-97	-301
	Gear Extension	0	162
15	ESTIMATED LANDING FUEL	6882	22441
16	ESTIMATED LANDING CONDITION	16707	53931
17	ESTIMATED LANDING C.G. IN % M.A.C. OR IN	36.5% MAC Gear Down	

LIMITATIONS

GROSS WT. TAKEOFF (lb.)	GROSS WT. LANDING (lb.)
33000	27500

PERMISSIBLE C.G. TAKEOFF (% M.A.C.)	FORWARD	AFT
	27.7	39.5
PERMISSIBLE C.G. landing (% M.A.C.)	FORWARD	AFT
	19.6	39.5

COMPUTED BY SIGNATURE
Sgt. John Doe

WEIGHT AND BALANCE AUTHORITY SIGNATURE
TSGT Jim Gun

PILOT SIGNATURE
Lt. Col A. C WATT

DD Form 365-4 Reverse, APR 89

Figure B–6. Sample DD Form 365–4 Form F (Tactical)

FORM B – AIRCRAFT WEIGHING RECORD	FOR USE WITH T.O. 1-1B-40, NAVAIR 01-1B-40, AND TM-55-1500-342-23	Form Approved OMB No. 0704-0188

Public reporting burden for this collection of information is estimated to average 10 minutes per response, including the time for reviewing instructions, searching existing data sources, gathering and maintaining the data needed, and completing and reviewing the collection of information. Send comments regarding this burden estimate or any other aspect of the collection of information, including suggestions for reducing this burden, to Washington Headquarters Services, Directorate for information Operations and Reports, 1215 Jefferson Davis Highway, Suite 1204, Arlington, VA 22202-4302, and to the Office of Management and Budget, Paperwork Reduction Project (0704-0188), Washington, DC 20503.

DATE WEIGHED (YYMMDD)	MODEL/DESIGN/SERIES	SERIAL NUMBER
910905	F-1XA	78-001

PLACED WEIGHED	WEIGHT AND BALANCE TECHNICIAN (Last, First, M.I.)	DUTY PHONE NUMBER
HILL AFB	GREEN, JIM B. SSGT	987-6543

REACTION (Wheels, jackpoints, etc.)	SCALE READING	CORRECTIONS	NET WEIGHT	ARM	MOMENT
LEFT MAIN	6555	-1	6554		
RIGHT MAIN	6584	-1	6583		
SUB – TOTAL (Both main)			13137	E 374.3	4917179
NOSE OR TAIL	2640	0	2640	F 88.0	232320
TOTAL (as weighed) Not to be posted on Chart C			15777	326.4	5149499

MEASUREMENTS

B= _____ the distance from the jig point, to the center of the main reactions. Obtain by measurement.

I= _____ the distance from the reference datum to the jig point of the aircraft, from which a plumb bob can be dropped to the ground. Obtain from the aircraft diagram in Chart E.

E= 374.3 [1] the distance from the reference datum to the center line of the main reactions.
E= I+B
E= I–B (If the jig point is aft of the center line of the main reactions.)

D= _____ the distance between the main and nose or tail reaction. Obtain by measurement.

F= 88.0 [1] the distance form the reference datum to the center line of the nose or tail reaction.
F= E–D (for nose reaction)
F= E+D (for tail reaction)

CORRECTIONS	LEFT MAIN	RIGHT MAIN	NOSE OR TAIL
CALB CORR			
SCALE CORR	-1	-1	0
TEMP ____ [2]			
EQUIP			
OTHER			
TOTAL	-1	-1	0

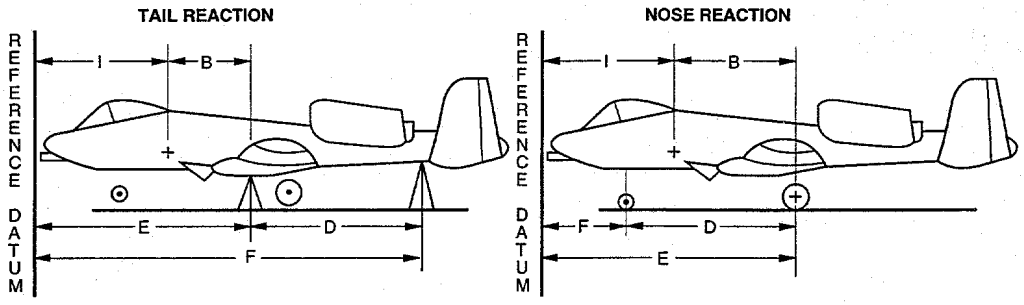

DIAGRAMS FOR MEASURING VARIOUS TYPES OF REACTIONS TO DETERMINE ARM OF SUPPORT POINTS.
See Aircraft Chart E's for specific weighing instructions.

[1] *Check dimensions E and F against approximate dimensions listed on Chart E.*

[2] *Enter temperature at time of weighing.*

DD Form 365-2, FEB 90 *Previous editions are obsolete.* 489/036

Figure B–7. Sample DD Form 365–2 Form B (Sheet 1 of 2)

DESCRIPTION	NET WEIGHT	ARM	MOMENT	[1] INDEX OR MOM/
TOTAL *(As weighed)* *(From front side)*	15777	326.4	5149499	
OIL	-24	375.0	-9000	
TOTAL OF ITEMS WEIGHED BUT NOT PART OF BASIC WEIGHED *(From Column I below)*	-270		-97440	
TOTAL OF BASIC WEIGHT ITEMS NOT IN AIRCRAFT WHEN WEIGHED *(From Column II below)*	+89		+25612	
BASIC AIRCRAFT *(Post to Chart C)*	15572	325.5	5068671	50686

COLUMN I				COLUMN II			
ITEMS WEIGHED BUT NOT PART OF BASIC WEIGHT	WEIGHT	ARM	MOMENT	BASIC WEIGHT ITEMS NOT IN AIRCRAFT WHEN WEIGHED	WEIGHT	ARM	MOMENT
GEAR RESTRAINTS				Survival Gear	15	128.8	1932
NOSE	5	185.7	929	Unusable Fuel	74		23680
MAIN	10	343.1	3431				
TRAPPED FUEL	255		93080				
TOTAL	270		97440	**TOTAL**	89		25612

REACTIONS USED

WING AND NOSE JACK POINTS

TYPE SCALE REVERE
SERIAL NUMBER 13876
CALIBRATION DATE *(YYMMDD)* 901214
CALIBRATED ACCURACY 0.1%

REMARKS

1) Basic Weight DETERMINED AT 0° (LEVEL) AIRCRAFT ATTITUDE

2) Aircraft WAS SUPPORTED BY THREE B-6 TYPE JACKS.

3) Aircraft WAS WEIGHED IN CLOSED HANGAR.

[1] *Enter constant used*

DD Form 365-2 Reverse, FEB 90

Figure B–7. Sample DD Form 365–2 Form B (Sheet 2 of 2)

RECORD OF WEIGHT AND BALANCE PERSONNEL

	Last Name	First Name	M	Grade, Rate, or Rank	Where Qualified	When Qualified	Station	Date Assigned	Date Relieved
	Brown	John	A	KTR	General Dynamics	1968/10/16	Fort Worth, TX	2001/01/18	2001/01/18
	Green	Jim	B	SSgt	Chanute AFB Il	1975/05/01	Hill AFB	2001/01/18	
*									

Figure B–8. Sample AWBS Record of Weight and Balance Personnel

CHART A – BASIC WEIGHT CHECKLIST RECORD

MDS	Serial Number	Constant	Working Date		
F-1XA	78-001	100	1991/09/05	(910905) Hill AFB	6.
				(890312) Hill AFB	7.
Compartment	Compartment Description			(890219) General Dynamics,	8.
D	Inlet, Nose Wheel, and Lwr Fuse (Below WL91) (110.5-277.9 in)			4.	9.
				5.	10.

	Item Number	Item Description	Weight	H. Arm	H. Moment (Simp)	In A/C	P.	Date	910905	890312	890219	4.	5.	6.	7.	8.	9.	10.
	D -003.00	Interference Blanker 16VE019001	7.0	116.00	8.1	☑	☐	1991/09/05	I	I	I	.	.	.	.	.	.	.
	D -004.00	Programmer - ALE 40 16VE018001	3.0	149.00	4.5	☑	☐	1991/09/05	I	I	I	.	.	.	.	.	.	.
	D -005.00	Computer - Fire Control 16VE015001	29.0	163.00	47.3	☑	☐	1991/09/05	I	I	I	.	.	.	.	.	.	.
	D -006.00	Mount Fire Control Computer 16VE015	4.0	163.00	6.5	☑	☐	1991/09/05	I	I	I	.	.	.	.	.	.	.
	D -007.00	Antenna - UHF/Low Band 16VE078	2.0	166.40	3.3	☑	☐	1991/09/05	I	I	I	.	.	.	.	.	.	.
	D -008.00	Video Recorder (Alt D-9) (NA)	50.0	168.00	84.0	☐	☐	1991/09/05	O	O	O	.	.	.	.	.	.	.
	D -009.00	Recorder - Signal Data (SLM) (ALT D-8) 60-6437	25.0	168.00	42.0	☐	☐	1991/09/05	O	O	O	.	.	.	.	.	.	.
	D -010.00	Rcvr/Trans - TACAN RT1159/A	30.0	172.30	51.7	☑	☐	1991/09/05	I	I	I	.	.	.	.	.	.	.
	D -011.00	Adapter - Rcvr/Trans - TACAN 81-0284	5.0	172.30	8.6	☑	☐	1991/09/05	I	I	I	.	.	.	.	.	.	.
	D -012.00	Mount - TACAN MT/R81-4557	7.0	172.50	12.1	☑	☐	1991/09/05	I	I	I	.	.	.	.	.	.	.
	D -013.00	Converter - Signal Data (SLM) (Out 89 Mar 30)	8.0	173.00	13.8	☐	☐	1991/09/05	O	I	I	.	.	.	.	.	.	.
	D -014.00	Antenna - C/D Band AS-3262/ALR	2.0	178.80	3.6	☑	☐	1991/09/05	I	I	I	.	.	.	.	.	.	.
	D -015.00	Light Formation (2) 16VE0820011	3.0	180.00	5.4	☑	☐	1991/09/05	I	I	I	.	.	.	.	.	.	.
	D -016.00	Processor CM479/ALR69	25.0	181.50	45.4	☑	☐	1991/09/05	I	I	I	.	.	.	.	.	.	.
	D -017.00	Rcvr/Trans - AFIFF 16VE033001	15.0	183.00	27.4	☑	☐	1991/09/05	I	I	I	.	.	.	.	.	.	.
	D -018.00	Wheel - Nose Gear 41-1401	12.0	185.70	22.3	☑	☐	1991/09/05	I	I	I	.	.	.	.	.	.	.
	D -019.00	Tire - Nose Gear 41-1402	15.0	185.70	27.9	☑	☐	1991/09/05	I	I	I	.	.	.	.	.	.	.
▶	D -020.00	Kit-1A T/SEC (In 89 Mar 30) GFE	8.0	253.00	20.2	☑	☐	1991/09/05	I	O	O	.	.	.	.	.	.	.
	D -021.00	Mount - Kit - 1A T/SEC MT 4579/V	2.0	253.00	5.1	☑	☐	1991/09/05	I	I	I	.	.	.	.	.	.	.
	D -022.00	Rcvr/Controller - Threat Warning CM10323/ALR69	19.0	257.80	49.0	☑	☐	1991/09/05	I	I	I	.	.	.	.	.	.	.
	D -023.00	Rcvr - Threat Warning R2094/ALR69	15.0	257.80	38.7	☑	☐	1991/09/05	I	I	I	.	.	.	.	.	.	.
	D -024.00	SAecure Voice KY28 (Basic) KY58	17.0	258.00	43.9	☑	☐	1991/09/05	I	I	I	.	.	.	.	.	.	.
*			0	0	0	☐	☐		.	.	.	.	.	.	.	.	.	.

Figure B–9. Sample AWBS Chart A

FORM B

Page 1/2

FORM B - AIRCRAFT WEIGHING RECORD — 3-POINT

DATE WEIGHED	1989/02/19	MODEL/DESIGN	F-1XA	SERIAL NUMBER	78-001
PLACE WEIGHED		TECHNICIAN	John A. Brown	DUTY PHONE	

REACTION	SCALE READING	CORRECTIONS	NET WEIGHT	HOR. ARM	HOR. MOM	LAT. ARM	LAT. MOM
LEFT MAIN	6555.0	-1.0	6554.0	374.30	2453162.2		
RIGHT MAIN	6584.0	-1.0	6583.0	374.30	2464016.9		
NOSE or TAIL	2640.0		2640.0	88.00	232320.0		
TOTALS	15779.0	-2.0	15777.0	326.39	5149499.1		

HORIZONTAL MEASUREMENTS

B = _____ Distance from the jig point to the center line of the main reactions
I = _____ Distance from the reference datum line to the jig point
E = 374.30 Distance from the reference datum line to the center line of the main reactions
D = _____ Distance between the main and the nose or tail reactions
F = 88.00 Distance from the reference datum line to the center line of the nose or tail reactions

LATERAL MEASUREMENTS

LM = _____ Distance from the lateral reference datum line to the Left Main reaction
RM = _____ Distance from the lateral reference datum line to the Right Main reaction
NT = _____ Distance from the lateral reference datum line to the Nose or Tail reaction

ADJUSTMENTS		NET WEIGHT	H. ARM	H. MOMENT	L. ARM	L. MOMENT
Level Weigh - No Correction						
Total (As Weighed Above)		15777.0	326.39	5149499.1		
Total of Column I (page 2)	-	294.0	362.04	106439.5		
Total of Column II (page 2)	+	89.0	287.78	25612.0		
BASIC AIRCRAFT		15572.0	325.50	5068671.6		

SIMPLIFIED HORIZONTAL MOMENT	50686.7	SIMPLIFIED LATERAL MOMENT		CONSTANT	100

SCALE

SCALE TYPE: Revere

SERIAL NUMBER: 13876

CALIBRATION ACCURACY: 0.1%

CALIBRATION DATE: 1990/12/14

REACTIONS USED
Wing and Nose Jack Points

CORRECTIONS

REACTION	CALIB	SCALE	TEMP	EQUIP	OTHER	TOTAL
LEFT MAIN		-1.0				-1.0
RIGHT MAIN		-1.0				-1.0
NOSE or TAIL						

REMARKS
1. Basic Weight determined at 0 degrees (level) aircraft attitude
2. Aircraft was supported by three B-6 type jacks
3. Aircraft was weighed in a closed hangar

Figure B–10. Sample AWBS Form B (Sheet 1 of 2)

Page 2/2

COLUMN I					
Items Weighed But Not Part of Basic Weight	WEIGHT	HOR. ARM	HOR. MOM	LAT. ARM	LAT. MOM
Nose Restraints	5.0	185.70	928.5		
Mian Restraints	10.0	343.10	3431.0		
Trapped Fuel	255.0	365.02	93080.0		
Oil	24.0	375.00	9000.0		
TOTAL of Items Weighed But Not Part of Basic Weight	294.0	362.04	106439.5		

COLUMN II					
Basic Weight Items Not in Aircraft When Weighed	WEIGHT	HOR. ARM	HOR. MOM	LAT. ARM	LAT. MOM
Survival Gear	15.0	128.80	1932.0		
Unusable Fuel	74.0	320.00	23680.0		
TOTAL Basic Weight Items Not in Aircraft When Weighed	89.0	287.78	25612.0		

Figure B–10. Sample AWBS Form B (Sheet 2 of 2)

CHART C – BASIC WEIGHT AND BALANCE RECORD

MDS	Serial Number	Constant	Basic Weight	Basic H. Arm	Basic H. Moment (Simp)	%MAC	1st Pg#
F-1XA	78-001	100	15572.0	325.50	50686.7	38.69	1

	Date	Act.	Item Number	Description	Weight	H. Arm	H. Moment (Simp)	Basic Weight	Basic H. Arm	Basic H. Moment	%MAC
	2001/01/18	H		As Carried Forward from Manual Records				15513.0	325.00	50417.0	38.30%
	1989/02/19	I		Calculated Weight and Moment per Inventory Completed at General Dynamics, Fort Worth, TX				15513.0	325.00	50417.0	38.30%
	1989/03/12	I		Calculated Weight and Moment per Inventory Completed at Hill AFB				15513.0	325.00	50417.0	38.30%
	1989/03/30	R	D -013.00	Converter - Signal Data (SLM) (Out 89 Mar 30)	8.0	173.00	13.8	15505.0	325.08	50403.2	38.36%
	1989/03/30	A	D -020.00	Kit-1A T/SEC (In 89 Mar 30) GFE	8.0	253.00	20.2	15513.0	325.04	50423.4	38.33%
	1989/06/27	R		Engine S/N E681105 Removed	3037.0	427.10	12971.0	12476.0	300.20	37452.4	18.75%
	1989/06/27	A		Engine S/N E70303 Installed	3061.0	426.90	13067.4	15537.0	325.16	50519.8	38.42%
	1989/06/27	A		Center Fuselage Bulkhead, TCTO 1F-1XA-600, 20 Aug 88	36.0	443.90	159.8	15573.0	325.43	50679.6	38.64%
	1991/09/05	I		Calculated Weight and Moment per Inventory Completed at Hill AFB				15573.0	325.43	50679.6	38.64%
	1989/02/19	W		BASIC A/C, WEIGHED AT :	15572.0	325.50	50686.7	15572.0	325.50	50686.7	38.69%
*					0	0	0	0	0	0	

Figure B–11. Sample AWBS Chart C

TACTICAL FORM F

WEIGHT AND BALANCE CLEARANCE FORM F - TACTICAL										
								LEMAC		276.40
								MAC		126.90
								Moment Simplifier		100
DATE(YYYYMMDD) 1991/08/27	AIRCRAFT		F-1XA	FROM		Hill AFB	HOME STATION			Hill AFB
MISSION TRAINING	SERIAL NO		78-001	TO		Hill AFB	PILOT			Lt Col A.C. Watt

WORST CASE CONDITIONS CALCULATIONS				REF	ITEM	WEIGHT	MOMENT
ITEM	WEIGHT	MOMENT	%MAC	1	BASIC AIRCRAFT (From Chart C)	**15572**	**50686.7**
M O S T F W D				3	Pilot	193	266.0
RAMP WEIGHT	29100	92508.7	32.7%		Co-Pilot		
Take Off Fuel	-11782	-36631.0	36.5%		Retained Ammunition	208	530.0
Most FWD Fuel Condition	10640	32630.0	31.7%				
Gear-Up Moment (GUMC)		-162.0	31.2%		Oil	24	90.0
AIM-8J (2 Tip)	-338	-1227.0	30.7%				
Chaff / Flare	-24	-110.0	30.6%				
MOST FORWARD CONDITION	27596	87008.7					
MOST FWD CG LIMIT vs ACTUAL		26.0% <	30.6%				
M O S T A F T							
RAMP WEIGHT	29100	92508.7	32.7%				
Take Off Fuel	-11782	-36631.0	36.5%				
Most AFT Fuel Condition	1975	6494.0	36.9%				
Exp Ammo - 511 Rds (20 mm)	-79	-201.0	37.2%	4	OPERATING WEIGHT	**15997**	**51572.7**
H/W Config B-1	-880	-2767.0	37.5%	5	Exp Ammo - 511 Rds (20 mm)	79	201.0
MOST AFT CONDITION	18334	59403.7		6	AIM-8J (2 Tip)	338	1227.0
MOST AFT CG LIMIT vs ACTUAL		41.0% >	37.5%		H/W Config B-1	880	2767.0
					Chaff / Flare	24	110.0
				7	Internal Fuel (1073 Gallons)	6972	22144.0
					External Fuel (740 Gallons)	4810	14487.0
				9	RAMP WEIGHT	**29100**	**92508.7**
				10	RAMP CG (Gear Down) (%MAC)		**32.7%**
				11	TAXI FUEL	-576	-1788.0
					GEAR UP Moment (GUMC)		-162.0
				12	TAKEOFF WEIGHT	**28524**	**90558.7**
				13	TAKEOFF CG (Gear Up) (%MAC)		**32.4%**
				14	FUEL AT TAKEOFF	-11206	-34843.0
					Exp Ammo - 511 Rds (20 mm)	-79	-201.0
					AIM-8J (2 Tip)	-338	-1227.0
					H/W Config B-1	-880	-2767.0
					GEAR DOWN Moment (GDMC)		162.0
				15	ESTIMATED LANDING FUEL	688	2241.0
				16	ESTIMATED LANDING WEIGHT	**16709**	**53923.7**
				17	ESTIMATED LANDING CG (Gear Down) (%MAC)		**36.5%**

REMARKS
- GEAR RETRACTION: -162.0
- FUEL LOADED at 6.5 LBS/GAL
- ESTIMATED LANDING FUEL: 688 LBS (105 gallons)
- Landing Condition
  - Fuel Approx 106 gals
  - Ammo 1/2 Live Rnds remaining (208 lbs)
  - External tanks - pylons dropped
- Zero Fuel Condition - 36.6% MAC
- Gear Down

LIMITATIONS					
Ramp Weight vs Limit			<		
Takeoff Weight vs Limit		28524	<	33000	
Landing Weight vs Limit		16709	<	27500	
Zero Wing Fuel Wt vs Limit			<		
CG LIMITS	FWD	CURRENT		AFT	
Ramp CG (Gear Down)	<		<		
Takeoff CG (Gear Down)	19.6%	< 32.8%	<	39.5%	
Takeoff CG (Gear Up)	27.7%	< 32.4%	<	39.5%	
Landing CG (Gear Up)	27.7%	< 35.7%	<	39.5%	
Landing CG (Gear Down)	19.6%	< 36.5%	<	39.5%	
Zero Fuel Weight CG (GD)	<		<		
WORST CASE CG	FWD	CURRENT		AFT	
Most Forward CG	26.0%	< 30.6%			
Most AFT CG		37.5%	<	41.0%	

COMPUTED BY SIGNATURE
Sgt John Doe

WEIGHT AND BALANCE AUTHORITY SIGNATURE
TSgt Jim Gun

PILOT SIGNATURE
Lt Col A.C. Watt

Figure B–12. Sample AWBS Form F (Sheet 1 of 2)

TRANSPORT FORM F

WEIGHT AND BALANCE CLEARANCE FORM F - TRANSPORT			
		LEMAC	1254.24
		MAC	370.52
		Moment Simplifier	10000
DATE(YYYYMMDD) 2001/01/12	AIRCRAFT C-5B	FROM Dover AFB	HOME STATION Dover AFB
MISSION TRAINING	SERIAL NO 83-1285	TO Andover AFB	PILOT Lt. Col Joe Cool

REMARKS
GEAR RETRACTION: 9.3
FUEL LOADED at 6.5 LBS/GAL
ESTIMATED LANDING FUEL: 18200 LBS (2800 gallons)

REF	ITEM	WEIGHT	MOMENT
1	BASIC AIRCRAFT	**368663**	**51604.7**
3	Crew [Six]	1290	61.7
4	Crew Bags		
5	Steward's Equip		
6	Emergency Equip		
7	Extra Equip		
8	Liquid Nitogen	1500	212.7
9	OPERATING WEIGHT	**371453**	**51879.1**
10	Internal Fuel	182000	25433.6
	Aux/External Fuel		
11			
12	TOTAL AIRCRAFT WEIGHT	**553453**	**77312.7**
13	Pallets	6600	821.0
	Pallet Nets	1188	147.8
	Pallet Load	210079	26133.8
	WRM Kit	680	40.8
16	RAMP WEIGHT	**772000**	**104456.1**
17	RAMP CG (Gear Down) (%MAC)		**26.7%**
18	TAXI FUEL	-1820	-254.3
19	TAKEOFF WEIGHT	**770180**	**104201.8**
20	TAKEOFF CG (Gear Down) (%MAC)		**26.6%**
	FUEL AT TAKEOFF	-180180	-25179.3
21	ZERO FUEL WEIGHT	590000	79022.5
22	LESS EXPENDABLES/AIR DROP		
23	ESTIMATED LANDING FUEL	18200	2543.3
24	ESTIMATED LANDING WEIGHT	**608200**	**81565.8**
25	ESTIMATED LANDING CG (Gear Down) (%MAC)		**23.4%**

DISTRIBUTION OF ALLOWABLE LOAD

LIMITATIONS		
Ramp Weight vs Limit	772000 <	920000
Takeoff Weight vs Limit	770180 <	920000
Landing Weight vs Limit	608200 <	675000
Zero Fuel Weight vs Limit	590000 <	635000
Load vs Max Allowable Load	218547 <	263547
Remaining Allowable Load	**45000**	

CG LIMITS	FWD	CURRENT	AFT
Ramp CG (Gear Down)	19.0% <	26.7% <	41.0%
Takeoff CG (Gear Down)	19.0% <	26.6% <	41.0%
Takeoff CG (Gear Up)	19.0% <	26.7% <	41.0%
Landing CG (Gear Up)	19.0% <	23.5% <	41.0%
Landing CG (Gear Down)	19.0% <	23.4% <	41.0%
Zero Fuel CG (GD)	19.0% <	23.0% <	41.0%

COMPUTED BY SIGNATURE

WEIGHT AND BALANCE AUTHORITY SIGNATURE

PILOT SIGNATURE

Figure B–12. Sample AWBS Form F (Sheet 2 of 2)

FORM B - AIRCRAFT WEIGHING RECORD (STANDARD - HORIZONTAL)

DATE WEIGHED	MODEL/DESIGN	SERIAL NUMBER
890219	F-1XA	78-001
PLACE WEIGHED	**TECHNICIAN**	**DUTY PHONE**
Gen. Dyn/Ft. Worth	Brown, John A	123-7654

REACTION	SCALE RDG	CORR	NET WGT	H. ARM	H. MOM	L. ARM	L. MOM
LEFT MAIN	6820.0	0	6820.0	343.30	2341306.0	.00	.0
RIGHT MAIN	6821.0	0	6821.0	343.30	2341649.3	.00	.0
NOSE OR TAIL	1658.0	0	1658.0	185.00	306730.0	.00	.0
TOTALS	15299.0	0	15299.0	326.14	4989685.3	.00	.0

HORIZONTAL MEASUREMENTS

B =	-31.00	Distance from the jig point to the center line of main reactions
I =	374.30	Distance from the reference datum line to the jig point
E =	343.30	Distance from the reference datum line to the center line of main reactions
D =	158.30	Distance between the main and the nose or tail reactions
F =	185.00	Distance from the reference datum line to the center line of the nose or tail reactions

LATERAL MEASUREMENTS

LM=	.00	Distance from the lateral reference datum line to the Left Main reaction
RM=	.00	Distance from the lateral reference datum line to the Right Main reaction
NT=	.00	Distance from the lateral reference datum line to the Nose or Tail reaction

DESCRIPTION		NET WGT	H. ARM	H. MOM	L. ARM	L. MOM
Total (As Weighed Above)		15299.0	326.14	4989685.3	.00	.0
Oil in Aircraft	-	.0	.00	.0	.00	.0
Total of Column I (page 2)	-	11.0		1477.0		.0
Total of Column II (page 3)	+	225.0		53503.5		.0
Basic Aircraft		15513.0	325.00	5041711.8	.00	.0

SIMPLIFIED HORIZONTAL MOMENT	SIMPLIFIED LATERAL MOMENT	CONSTANT
50417.1	.0	100

SCALE	REACTION	CORRECTIONS CALB	SCALE	TEMP	EQUIP	OTHER	TOTAL
SCALE TYPE Howe-Richardson Beam	LEFT MAIN	0	0	0	0	0	0
SERIAL NUMBER 13577	RIGHT MAIN	0	0	0	0	0	0
CALIBRATION ACCURACY 0.1%	NOSE OR TAIL	0	0	0	0	0	0
CALIBRATION DATE 880915							

REACTIONS USED

Nose and Main Gear

REMARKS

1) Aircraft eff. applicable to this weighing: USAF No. 78-001 thru 78-005
2) BW includes those items scheduled for delivery per T.O. -1F-1XA-5 check delivery, dated 19 Feb 1989.
3) BW determined at Level aircraft attitude.
4) Aircraft was weighed in closed hangar with vent/blowers off.

Figure B–13. Sample AWBS Form B (Sheet 1 of 2)

FORM B - AIRCRAFT WEIGHING RECORD (STANDARD - HORIZONTAL)

COLUMN I Items Weighed But Not Part of Basic Weight				COLUMN II Basic Weight Items Not in Aircraft When Weighed			
ITEM	WEIGHT	H. ARM L. ARM	H. MOM L. MOM	ITEM	WEIGHT	H. ARM L. ARM	H. MOM L. MOM
Protective Covers	3.0	115.00 .00	345.0 .0	Clock	1.0	114.0 .0	114.0 .0
Paper - Canopy	4.0	143.00 .00	572.0 .0	Arrestors-Lightning	1.0	454.0 .0	454.0 .0
Safety Locks	4.0	140.00 .00	560.0 .0	Chaff/Flare Pkg (LH)	6.0	457.0 .0	2742.0 .0
	.0	.00 .00	.0 .0	Survival Gear	15.0	128.8 .0	1932.0 .0
	.0	.00 .00	.0 .0	Unusable Fuel	74.0	320.0 .0	23680.0 .0
	.0	.00 .00	.0 .0	Oxygen	13.0	269.7 .0	3506.1 .0
	.0	.00 .00	.0 .0	Fuel - EPU	56.0	244.9 .0	13714.4 .0
	.0	.00 .00	.0 .0	Halon	13.0	315.0 .0	4095.0 .0
	.0	.00 .00	.0 .0	LDRF - Fire Control Radar	46.0	71.0 .0	3266.0 .0
	11.0		1477.0		225.0		53503.5

Figure B–13 Sample AWBS Form B (Sheet 2 of 2)