TECHNICAL MANUAL

PRESERVATION, PACKAGING AND PACKING

EXTERNAL AIRCRAFT FUEL TANKS/CELLS

(ATOS)

THIS MANUAL SUPERSEDES TO 00-85A-03-1, DATED 1 OCTOBER 2011.

DISTRIBUTION STATEMENT A: Approved for public release; distribution is unlimited. PA Case Number AFMC 05-263. Submit recommended changes or problems with this Technical Order to OC-ALC/ENGLA, Tinker AFB, OK 73145-9417.

Published under authority of the Secretary of the Air Force

15 AUGUST 2012

INSERT LATEST CHANGED PAGES. DESTROY SUPERSEDED PAGES.

LIST OF EFFECTIVE PAGES

NOTE: The portion of the text affected by the changes is indicated by a vertical line in the outer margins of the page. Changes to illustrations are indicated by shaded or screened areas, or by miniature pointing hands.

Dates of issue for original and changed pages are:

Original..... 0 ..... 15 August 2012

TOTAL NUMBER OF PAGES IN THIS MANUAL IS 48, CONSISTING OF THE FOLLOWING:

Page No.	*Change No.	Page No.	*Change No.	Page No.	*Change No.
Title	0				
A	0				
i - ii	0				
1-1 - 1-2	0				
2-1 - 2-11	0				
2-12 Blank	0				
3-1 - 3-19	0				
3-20 Blank	0				
4-1 - 4-6	0				
5-1 - 5-3	0				
5-4 Blank	0				

*Zero in this column indicates an original page

TABLE OF CONTENTS

Chapter		Page
1	INTRODUCTION	1-1
1.1	Purpose	1-1
1.2	General	1-1
1.3	Handling	1-1
1.4	Precautions To Be Observed	1-1
1.5	Definitions	1-2
1.6	Periodic Inspection	1-2
1.7	Additional Inspections to be Performed	1-2
1.8	Requests for Packaging Instructions	1-2
2	ASSEMBLED TANKS	2-1
2.1	General	2-1
2.2	Handling Precautions	2-1
2.3	Preservation and Packaging (All Categories of Storage)	2-1
2.4	Tank Component Parts	2-1
2.5	Assembled Tanks	2-4
2.6	Packing	2-4
2.7	Identification of Purging and Preservation Requirements	2-4
2.8	Air Shipment	2-5
2.9	Marking	2-5
2.10	Fiberglass Maintenance Instructions	2-5
2.11	Cushions	2-6
3	NESTED TANKS	3-1
3.1	General	3-1
3.2	Handling Precautions	3-1
3.3	Storage	3-1
3.4	Packing and Unpacking	3-2
3.5	Marking	3-2
3.6	Periodic Inspection of Loaded Containers	3-2
3.7	Container Inspection and Minor Repairs	3-3
3.8	General Inspection and Classification of Empty Containers	3-4
3.9	Classification	3-5
3.10	Repair Procedure for Reparable Containers	3-5
3.11	Modification Procedure for Containers Without Skids	3-7
4	FUEL, OIL AND WATER-ALCOHOL CELLS	4-1
4.1	General	4-1
4.2	Self-Sealing Fuel and Oil Cells	4-1
4.3	Bladder Type Fuel, Oil and Water-Alcohol Cells	4-2
4.4	Goodyear Nylon (Vithane) Fuel Cells	4-2
4.5	Goodyear Nylon Pliocel Fuel Cells	4-2
4.6	Four and Five Sided Wing Fuel Cells	4-2
4.7	General Packaging, Preservation and Handling Procedures	4-3
4.8	Packing	4-5
4.9	Uncrating Instructions	4-5
4.10	Identification of Purging and Preservation Requirements	4-5
4.11	Marking	4-5

5 MATERIALS AND EQUIPMENT 5-1

5.1 Materials 5-1

LIST OF ILLUSTRATIONS

Number	Title	Page
2-1	Slotted Angle Crate, ASTM D 6255 (USAF)	2-7
2-2	Reuse of Existing Strapping	2-9
2-3	Packaging of Pylons Stored in the Up Position	2-10
2-4	Packaging of Pylons Stored in the Down Position	2-11
3-1	Positioning Rolling Rings and Canister on Fixture	3-9
3-2	Fixture with Trolley and Hoists	3-10
3-3	Spreader Bar	3-11
3-4	Webbing Strap	3-12
3-5	Rolling Ring	3-13
3-6	Stand Winch	3-14
3-7	Portable Winch Stand	3-15
3-8	Canister Holding Fixture	3-16
3-9	Puller Cables	3-17
3-10	Skid and Stacking Lugs	3-18
3-11	Handling Device	3-19

LIST OF TABLES

Number	Title	Page
2-1	Containers for Assembled Tanks	2-8
2-2	Consumable Supplies	2-8
3-1	List of Illustrations	3-3

CHAPTER 1
INTRODUCTION

1.1 PURPOSE.

The purpose of this technical order is to provide general instructions which shall govern the storage, preservation, packaging and packing of external fuel tanks, hereinafter referred to as tanks; and fuel, oil, or water-alcohol cells made of synthetic rubber or nylon, hereinafter referred to as cells. The processing procedures and instructions outlined herein apply to serviceable and reparable tanks and cells. All tanks and cells shall be given the same preservation for storage, domestic or overseas shipment.

1.2 GENERAL.

1.2.1 Provides general instructions governing the handling, storage, preservation, packaging and packing of external fuel tanks and fuel cells. Provides specific markings which must be applied to the requirements on MIL-STD-129.

1.2.2 To facilitate accomplishment of periodic inspection by sampling methods, tanks and cells with like characteristics shall be stocked or stored together. Factors such as manufacturer, last reconditioning activity, date of manufacture or repair, previous storage conditions, and type of containers should be considered when complying with the requirements set forth in this technical order.

1.3 HANDLING.

1.3.1 Carry uncrated/unboxed tanks and leave in shipping container until needed. Use only specification barrier material and tape.

1.3.2 Detailed packing instructions are contained in the Special Packaging Instructions (SPI) for each stock number. References are made to using the appropriate SPI in all categories, assembled tanks, nested tanks and cells.

1.3.3 Emphasis should be placed on the careful handling and packaging of external tanks and rubber or nylon cells. Many manhours are lost because of improper packaging and storage conditions. A heavy tool dropped on a tank or cell; a careless drop of a tank; a careless step on a cell; dragging of a tank or cell over rough or sharp surfaces, or other such treatment may result in damage.

1.4 PRECAUTIONS TO BE OBSERVED.

1.4.1 Do not use cell fittings for hand-holds on lifting. Using fittings for lifting will distort the metal fittings, destroying their capability and making the cell unserviceable.

1.4.2 When handling tanks or cells that have large access door frames, a protective cover of plywood or metal shall be attached to the door frame to prevent possible damage. The cover must have all rough edges and surfaces removed to prevent scratching or denting a tank or scuffing a cell when it is folded.

1.4.3 Carry tanks or cells when moving them from one location to another. Do not drag or roll tanks or cells.

1.4.4 Do not place tanks or cells on a dirty bench or floor. Never place on the ground, always provide a protective pad of felt, canvas or wrapping paper.

1.4.5 Tanks and cells shall remain in shipping containers until needed.

1.4.6 Tanks or cells not in process of being repaired shall have all access door openings covered with access doors, fitted covers or with application of barrier material conforming to Specification MIL-PRF-121, Grade A, and taped in place with one-inch wide tape conforming to Specification SAE AMS-T-22085, Type II, NSN 8135-00-852-8179.

1.4.7 Uncrated tanks or unpackaged cells shall not be stacked.

1.4.8 Serviceable tanks possessing dents, scratches and nicks greater than those specified in the applicable overhaul manual shall require maintenance action before processing for shipment or storage.

1.5 DEFINITIONS.

1.5.1 Tank - external fuel tank, assembled or nested.

1.5.2 Cell - internal container designed to be placed inside a structure such as a wing.

1.5.3 Use of “shall,” “will,” “should” and “may” in this publication.

1.5.3.1 The word “shall” is to be construed to mean that the requirements are binding or mandatory.

1.5.3.2 The word “will” is used to express declaration of purpose.

1.5.3.3 The word “should” is used to express non-mandatory desire of preferred method of accomplishment.

1.5.3.4 The word “may” is used to express an acceptable or suggested means of accomplishment.

1.6 PERIODIC INSPECTION.

1.6.1 All tanks shall be periodically inspected in accordance with AFMAN 23-110, Vol 7, part 3. Tank inspection procedures shall be in accordance with applicable 6J14-2-series technical orders. Appropriate inspection intervals as follows:

1.6.2 Storage period between inspections and assembled tanks, uncovered, in outside storage area is 24 months.

1.6.3 Storage period between inspections for assembled tanks covered with shed material is 36 months.

1.6.4 Storage period between inspections for assembled tanks stored in inside (preferred) storage area is 60 months.

1.6.5 Nested tanks in containers may be stored indefinitely.

1.7 ADDITIONAL INSPECTIONS TO BE PERFORMED.

1.7.1 Containers shall be inspected in accordance with the requirements in Chapter 2 and Chapter 3 of this TO as applicable.

1.7.2 Foam baffle material in assembled tanks shall be tested and inspected in accordance with TO 1-1-3, Chapter 5. Inspection of the foam shall be once every 12 months for each tank in lots of ten or less. If more than ten tanks, a ten percent random selection with a minimum of ten tanks shall be inspected every year. If any deficiency is found in any one of the tanks inspected in the random selection, then all tanks shall be inspected. For any tank found to be deficient, the tank must be retagged as unserviceable until the deficiency is corrected and the tank is serviceable. Process in accordance with the instructions in Chapter 2.

1.7.3 All tanks or cells shall be tested for flammable vapors when removed from storage for domestic or overseas shipment. A combustible gas indicator will be used (as specified in TO 1-1-3, paragraph 2.6.3.1). To minimize moisture entrance into the tank or container, the reading will be made through a plug, valve, or cap opening. If the reading exceeds 5 percent LEL (lower explosive limit), the tank or cell will be purged, preserved, and documented using procedures specified in Chapter 2 or Chapter 4 of this TO.

1.8 REQUESTS FOR PACKAGING INSTRUCTIONS.

1.8.1 Detailed special packaging instructions (SPI) for specific stock numbered tanks and cells are the responsibility of the prime ALC. Requests for these instructions shall be forwarded to the attention of DSPC.

1.8.2 Reports and requests for general packaging information relative to this technical order should be directed to 403 SCMS/GUEB, 5215 Thurlow St., Suite 5, Wright-Patterson Air Force Base, Ohio 45433-5540, or http://packweb.wpafb.mil/.

CHAPTER 2
ASSEMBLED TANKS

2.1 GENERAL.

Assembled tanks are to be packed in open style containers conforming to ASTM D 6255 or MIL-C-83669 (USAF). Wooden containers shall not be used. Any waiver to this requirement shall be granted only by specific request for exception to the item manager under justifiable circumstances, e.g., shipment of tanks for known immediate use. These tanks shall be afforded closed or shed storage when available. Exceptions for closed or shed storage are as follows:

NOTE

Aluminum and aluminum alloy assembled tanks and component parts shall not be stored outside unless processed in accordance with paragraphs 2.3 through 2.5.

a. When no further use or shipment of operational or material reserve stock is anticipated, tanks may be stored outside.

b. When tanks are assembled or reconditioned at a site or activity, and no further shipment is intended, tanks and components preserved and packaged in accordance with paragraphs 2.3 through 2.5 of this technical order may be stored in base of crate with superstructure removed. The tanks and components shall be positioned in such a manner as not to collect water.

c. Crated and uncrated tanks and components when stored outside shall be preserved and packaged in accordance with paragraph 2.5 of this TO. When storage site experiences unusual wind driven sand or other abrasive substances it may be necessary to cover tanks and components with tarpaulins, complying with Specification MIL-PRF-20696, or equivalent, or plastic sheeting, conforming to Specification A-A-3174, with a minimum thickness of 0.004 inch, to prevent damage. (National Stock Numbers for polyethylene plastic film in 100 foot roll, 20 feet wide and 100 foot roll, 12 feet wide are 8135-00-579-6487 and 8135-00-579-6489, respectively). When covered with tarpaulins or plastic sheeting, the covering must provide for passage of air through the covered area so as to preclude accumulation of condensation or trapped moisture. In no case shall the stacks be completely covered, thereby, precluding adequate circulation of air and creating high humidity and corrosive conditions.

d. All tanks with attached pylons or fairing assemblies shall be stored in a tilted position with the pylon or fairing in a downward angle other than vertical to prevent entrapment of moisture. When approved by the appropriate DSP personnel, tanks provided closed or shed storage or when the air and fuel openings or other critical parts within the fairing or pylon are sealed according to approved methods specified in the Special Packaging Instruction (SPI), positioning of pylon or fairing in a downward angle is not mandatory.

e. For individual instructions and illustrated parts breakdown, see the applicable aircraft manual or tank overhaul manual and parts breakdown.

2.2 HANDLING PRECAUTIONS.

See paragraph 1.4.

2.3 PRESERVATION AND PACKAGING (ALL CATEGORIES OF STORAGE).

Methods of preservation are to be in accordance with the packaging instructions (SPI) or contract. Use MIL-STD-2073 for guidance on preservation. MIL-STD-2073 Method 55 for small items, Method 40 for non-electrical, and Method 40 or 50 for items with attached/installed electrical components or gages.

2.4 TANK COMPONENT PARTS.

2.4.1 All small detached component parts including nuts, bolts, washers, non-electrical fittings, and when applicable, detached fuel pumps, shackles, and switches, shall be preserved and consolidated under one single method of preservation required for the most critical item contained therein. The applicable method of preservation shall be Method 55 in accordance with specification MIL-STD-2073 except that metal containers conforming to specification MIL-D-6054 or MIL-D-6055

(Drums) shall be used as the exterior container. The container shall be secured with suitable strapping to the interior of the crate so as not to allow any water to stand in them or become trapped by them.

2.4.2 Large Exterior Component Parts.

a. The interior aluminum surfaces of removable parts such as fins, fairings, pylons, struts, stabilizers or tailcones, which cannot be painted, shall be treated in accordance with TO 1-1-691. The exterior surfaces of large component parts shall be afforded the same treatment as the exterior surfaces of tanks.

b. Parts such as fins, fairings or stabilizers, not equipped with electrical components, gauges, connections or release connections, shall be preserved and packed in accordance with Method 40, Specification MIL-STD-2073, or equivalent. The bag and contents shall be overpacked and secured with strapping to the interior of the crate in such a manner as not to trap water.

c. Applicable parts such as pylons, struts or tailcones provided with electrical components, gauge connections and release connections, shall be preserved and packaged in accordance with Method 40 or 50 Specification MIL-STD-2073, or equivalent.

(1) For those components requiring Methods 40 or 50 protection:

(a) Determine desiccant quantity requirements in accordance with Specification MIL-STD-2073.

(b) Humidity Indicators (Specification SAE AS26860 or MS 20003) shall be used and positioned in an easily accessible location to facilitate periodic inspections. An inspection window (Specification SAE AS26860, or equivalent) may be installed in the barrier material for inspection of the Humidity Indicator.

(2) The bag and contents shall be packed in an overseas type container and shall be secured to the interior of the crate in such a manner as not to trap water. For items packaged Method 50, the container shall be provided with an inspection port and shall be positioned in alignment with the inspection window for easy reading.

d. When parachutes are provided as a component part of the tank, they shall be preserved and packaged in accordance with the appropriate Item Specification, TO or SPI. The container shall be secured with suitable strapping to the interior of the crate in such a manner as not to trap water.

2.4.3 Pylons, Fairings Attached to Assembled Tanks.

NOTE

In climates with high humidity, barrier material taped directly to pylons may trap moisture. An alternate method may be used to cover the pylon that allows for ventilation between the pylon and cover.

a. Moving parts of piston-type actuators (such as a wing pylon release actuator) shall be coated with corrosion preventive compound, Specification MIL-C-6529, Type I, NSN 6850-00-281-2031, over-wrapped with Specification MIL-PRF-121, Type I, Grade A barrier material, NSN 8135-00-753-4661, then overwrapped with Specification MIL-PRF-131, Class I, NSN 8135-00-282-0565 and taped securely with 1/2-inch wide ASTM D 5330, NSN 7510-00-584-5838. Plastic caps which fit over the part may be used to cover the corrosion preventive compound if the pylons are subject to intermittent use. All parts shall be given this protection to insure a waterproof seal; therefore, these parts should be recoated after each use.

WARNING

For safety of personnel removing compound by air pressure, wear protective clothing and eye glasses or a full-piece face shield, L-F-36.

b. On tank assemblies processed for long-term storage, all electrical connectors not connected shall be filled with non-hardening grease-like silicone compound such as Dow-Corning 4 Compound and General Electric Company's G624 Compound furnished under NSN 6850-00-880-7616. A two-part silicone rubber sealing compound NSN 8030-00-145-0372 or NSN 8030-00-809-0607 may be used as an alternate material. Plastic caps presently on connectors should fit the connector body, not the connector nut. Replace all caps which do not fit the connector body or are missing. Fill the plastic cap with the non-hardening grease-like silicone compound and press onto the connector, but do not press farther than the final 1/4 inch. To remove the compound, apply a 10 psig air pressure to the connector. Use of the alternate compound will allow a lip of the compound to form. This mixture will form a flexible mold of the pins and connector interior. To remove, pull off the cap, grasp the lip and pull with a rolling motion.

c. Pylon assemblies shall be afforded protection according to steps a. and b. above and as required by the applicable prime ALC Special Packaging Instruction (SPI). In the absence of specific SPI guide lines, pylon protection shall conform to the following applicable paragraph:

(1) Pylons stored in the up position (above horizontal). Cover the upper portion of the pylon with barrier material securely taped to the side of the pylon (see Figure 2-2), use MIL-PRF-131 barrier material (NSN 8135-00-282-0565) and ASTM D 5486 tape (NSN 7510-00-663-0194) or alternate (NSN 750193).

(2) Pylons stored in the down position (horizontal and lower). Using MIL-PRF-131 barrier material (NSN 8135-00-282-0565) completely cover the upward side of the pylon and extend to about one-third the underside of the pylon (see Figure 2-4). Securely tape the barrier material to the tank on the upward side sealing with SAE AMS-T-22085 Type II tape (NSN 7510-00-852-8180) or alternate (NSN 7510-00-914-1614). On the underside apply several pieces of tape along the edge of the barrier material holding it to the pylon and leaving several areas three to four inches long unsealed for drainage purposes. Punch five or six pencil size drain holes in the lowest position of the barrier material. If the pylon is straight down, cover both sides of the pylon completely and seal around the entire edge of the barrier to the tank with the above tape. Again place five or six drain holes in the lowest portion of the barrier material.

(3) The interface between tank and pylon and the wiring/ejector mechanism shall be treated with Specification MIL-PRF-81309 prior to storage and at each inspection. Tank pylons will not be removed from tanks to treat interface area. Attached pylons may be treated through access doors or openings in the pylon.

(4) Open pipes and vents shall be covered with rubber caps, heavy plastic bags fabricated from Specification MIL-B-22191 barrier material, or wrapped with Specification MIL-PRF-131 barrier material. The plastic bags or Specification MIL-PRF-131 barrier materials shall be taped securely in place using ASTM-D-5330 tape.

WARNING

Perform this operation in two steps. Choose a safe location for packing foam baffle material. Removing foam baffle material from tanks that have contained fuel and inserting into polyethylene bags may cause residual fuel vapors to ignite as a result of possible static electricity from the bag. Follow the applicable handling and safety precautions of TO 1-1-3 for foam baffle material.

d. Foam baffle material may either be stored externally to the fuel tank in accordance with the procedures of TO 1-1-3, Chapter 5, or the foam may be stored inside the fuel tank.

NOTE

The storage life of the baffle material is not limited provided it is maintained in a sealed polyethylene bag and out of direct sunlight and outside weather, including high humidity and temperature. The material should be reinspected for surface deterioration (loss of tensile properties) prior to use.

2.5 ASSEMBLED TANKS.

2.5.1 Interior and Exterior Surfaces.

2.5.1.1 Prior to applying any preservative, the tank shall be purged to a health-safe limit (5 percent of the lower explosive limit) and checked using a combustible gas indicated specified in TO 1-1-3, paragraph 2.6.3.1. Prior to making any tank entry, the applicable safety requirements of TO 1-1-3 and AFI 91-203, Chapter 23, shall be followed.

2.5.1.2 The purging shall be accomplished in accordance with TO 1-1-3.

2.5.2 Preservation of Purged Tanks.

2.5.2.1 In the absence of fuel resistant coatings and after checking the health-safe limit as specified in paragraph 2.5.1.1, preserve the tank interior (do not preserve tanks containing foam) by fogging with preservatives consisting of one part compound, NSN 6850-00-281-2031, Specification MIL-C-6529, Type 1, and three parts oil, NSN 9150-00-273-2388, Specification MIL-PRF-6081, Grade 1010. The preservative shall be applied by the use of a pressure spray gun to provide complete atomization. The tank shall be vented at a point the farthest distance practicable from the point of introduction of the oil during spraying operations. The amount of preservative shall be a minimum of 0.12 cc per square foot of internal surface area. If difficulty is encountered in obtaining complete preservative film coverage on the assembled tank interior, tank interiors and interior components may be fogged prior to assembly. After assembly, fog the tank interior as above. This will recover any metal surface from which the film has been inadvertently wiped off.

NOTE

Preservative compound is compatible with fuels and need not be removed before placing the tank in service

2.5.2.2 Exterior Surface Cleaning. Clean the exterior surface in accordance with instructions in TO 1-1-691.

CAUTION

Running lights or plastic parts shall be covered before cleaning with any chemical cleaner.

2.5.2.2.1 Metal surfaces of dissimilar metals in contact shall receive protective preservation in accordance with TO 1-1-691.

2.5.2.2.2 Additional Painting and Markings. Additional painting or markings such as letters, numbers and conspicuous markings shall be applied in accordance with TO 1-1-8.

2.6 PACKING.

2.6.1 Assembled external tanks preserved and packaged as indicated in paragraphs 2.3 through 2.5 shall be packed in containers conforming to Specification MIL-C-83669 or ASTM D 6255 (See Figure 2-1 and Table 2-1). The tanks shall be positioned and cushioned in the container in accordance with applicable Special Packaging Instruction (SPI), see paragraph 1.8.1, or Specification MIL-C-83669 (USAF).

NOTE

Slight corrosion will not affect the serviceability of slotted angle.

2.6.2 To reuse the existing strapping an extra piece of strapping 12 inch - 18 inch long and one extra seal are needed (See Figure 2-2). A strict visual inspection must be conducted on all material to preclude the use of defective material especially that which is rusted, bent or nicked. The seal joint area should also be discarded since this area is the first to corrode and the rusted or weakened area may be hidden beneath the seal.

2.7 IDENTIFICATION OF PURGING AND PRESERVATION REQUIREMENTS.

All tags in the DD FORM 1500 series shall be annotated “tank purged to lower explosive level reading 5 percent and preserved in accordance with TO 00-85A-03-1.” The forms shall be dated to reflect the date of the completed action. This procedure will preclude the handling of tanks not properly purged and preserved; will decrease inspection man-hours, and assist in eliminating hazardous conditions.

2.8 AIR SHIPMENT.

Prior to shipment by air, assembled tanks shall be vented to prevent implosion or explosion. This shall be accomplished by removing the protective seals or closures from the exterior fuel and air openings. When tanks are placed in storage at their destination, the fuel and air openings shall be resealed. Tanks processed for air shipment must be certified in accordance with AFMAN 24-204.

2.9 MARKING.

Marking requirements of interior and exterior containers shall be in accordance with Specifications ASTM D 6255, MIL-C-83669 (USAF), and Standard MIL-STD-129. Containers or crates in which assembled tanks are packed shall be conspicuously marked with the following legend, "Prior to Air Shipment, Remove Seals from Fuel and Air Openings of Tank." Tanks that are to be air shipped and have contained fuel shall be purged to level specified in paragraph 2.7 and the crate marked with an "empty" label SF 41, to comply with AFMAN 24-204.

2.10 FIBERGLASS MAINTENANCE INSTRUCTIONS.

These Instructions are for performing only general maintenance and repair of fiberglass containers for specific container parts that need to be replaced, obtain the necessary information from the applicable container TO. Consumable supplies for repairing the fiberglass containers are listed in Table 2-2.

2.10.1 Fiberglass Shell. Punctures less than one foot in any direction and cracks in the fiberglass shell should be repaired on interior surfaces. During repair of these containers, strict adherence to safety labels and procedures must be followed to prevent accidents. To repair the fiberglass shell, perform the following steps:

a. Using sandpaper (Item 1 in Table 2-2), sand an area approximately three inches larger in all directions than the damaged area.

WARNING

Wear protective eye glasses for all operations with these materials. Use with adequate ventilation. Flammable, do not use near an open flame. Avoid contact with skin and eyes.

WARNING

Protective chemical goggles or face shield must be worn during any operation involving Item 3 in Table 2-2, Methyl Ethyl Ketone Peroxide (MEKP). Eye contact with MEKP can cause immediate damage (blindness). If eye contact occurs, begin irrigation with water immediately and continue for 15 minutes. Seek medical attention.

b. Mix resin (Item 2 in Table 2-2) and catalyst (Item 3 in Table 2-2) and apply mixture to area previously sanded.

c. Apply Fiberglass mat (Item 4 in Table 2-2), cut to a size three inches larger in all directions than the damaged area, to interior surface of shell over damaged area.

d. Apply resin-catalyst mixture to fiberglass mat and allow to cure for one hour.

e. Apply fiberglass cloth (Item 5 in Table 2-2), cut to a size three inches larger in all directions than the damaged area, over previously installed fiberglass mat.

f. Apply resin-catalyst mixture to fiberglass cloth and allow to cure for 24 hours.

g. Cracks or holes which may require filling from the exterior in addition to interior repair can be accomplished by filling with resin-catalyst mixture and mat.

h. After curing, sand the repaired area with sandpaper (Item 1in Table 2-2) to remove fiberglass splinters and excess resin.

WARNING

Protective chemical goggles or face shield must be worn during any operation involving Item 3 in Table 2-2, Methyl Ethyl Ketone Peroxide (MEKP). Eye contact with MEKP can cause immediate damage (blindness). If eye contact occurs, begin irrigation with water immediately and continue for 15 minutes. Seek medical attention.

2.10.2 Surface scratches on the fiberglass reinforced plastic shells may be filled by applying, using brush (Item 6 in Table 2-2), a solution made up of gelcoat (Item 7 in Table 2-2) and catalyst (Item 3 in Table 2-2) mixed in proportions of 100 parts gelcoat to 1 part catalyst, by weight. Allow catalyzed gelcoat solution to cure for one hour after application.

2.11 CUSHIONS.

To replace polyethylene cushions, obtain the correct replacement cushion in accordance with the container TO, then proceed as follows.

a. Remove unserviceable cushion.

WARNING

Use of this material may require wearing of an organic vapor respirator. Consult Bioenvironmental Engineering. Use with adequate ventilation. Avoid prolonged breathing of vapor. Avoid prolonged or repeated contact with skin. Do not take internally.

b. Clean area with Trichloroethane (Item 8 in Table 2-2) and allow to dry.

c. Using brush (Item 6 in Table 2-2), apply adhesive (Item 9 in Table 2-2) to both surfaces to be bonded and allow to dry until tacky to the touch.

d. Place cushion in place and apply moderate pressure to firmly bond surfaces. Allow one hour for complete bond.

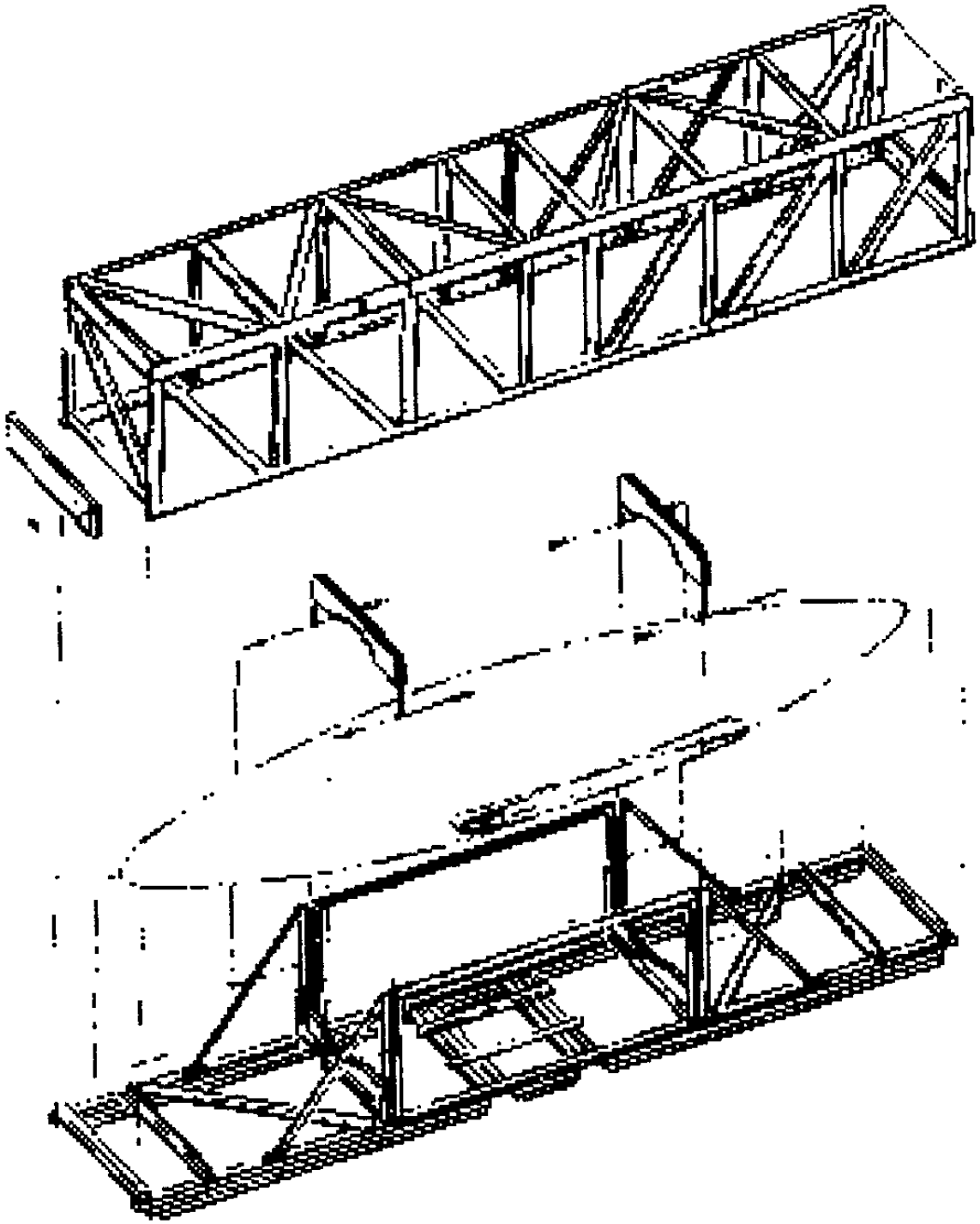

Figure 2-1. Slotted Angle Crate, ASTM D 6255 (USAF)

Table 2-1. Containers for Assembled Tanks

A/C	CAP/GAL	NSN	DESCRIPTION
F-15	600	8145-00-025-9738	Fiberglass Reinforced Plastic, Holds 2 Tanks
F-4	600	8145-00-025-9738	Fiberglass Reinforced Plastic, Holds 2 Tanks
		8145-00-026-8691BF	Slotted Angle Crate Kit for 1 Tank
F-4	370	8145-00-025-5442BF	Slotted Angle Crate Kit for 1 Tank
A-7	300	8145-00-348-1652MA	Slotted Angle Crate Kit for 1 Tank
F-105	650	8145-00-039-5371NE	Slotted Angle Crate Kit for 1 Tank
F-105	450	8145-00-025-5437NE	Slotted Angle Crate Kit for 1 Tank
F-101	450	8145-00-025-5440GU	Slotted Angle Crate Kit for 1 Tank
F-100	335	8145-00-025-5438ML	Slotted Angle Crate Kit for 1 Tank
F-100	275	8145-00-039-5357ML	Slotted Angle Crate Kit for 1 Tank
F-16	300	8115-01-208-4302FT	Slotted Angle Crate Kit for 1 Tank
F-16	370	8145-01-253-7482FT	Slotted Angle Crate Kit for 1 Tank

Table 2-2. Consumable Supplies

Item	Nomenclature	Specification	NSN
1	Sandpaper	ANSI-B74.18	5350-00-619-9166
2	Polyester Resin		8040-00-291-0164
3	MEK Peroxide Catalyst (See Warning, para 2.10.1, step h)	Hi-Point 80 WITCO Chemical US Peroxygen Div. Richmond CA	6810-00-290-7104
4	Fiberglass Mat	MIL-M-43248	
5	Fiberglass Cloth	MIL-C-19663	
6	Brush, Paint	FED SPEC H-B-420	8020-00-597-4763
7	Gelcoat	Color, 24052, Dark Green	8040-00-291-0164
8	Trichloroethane	ASTM D 4126 Grade I (Regular)	6810-00-181-1800
9	Adhesive	No. 1300, 3M Co. Minneapolis MN	8040-00-656-1285

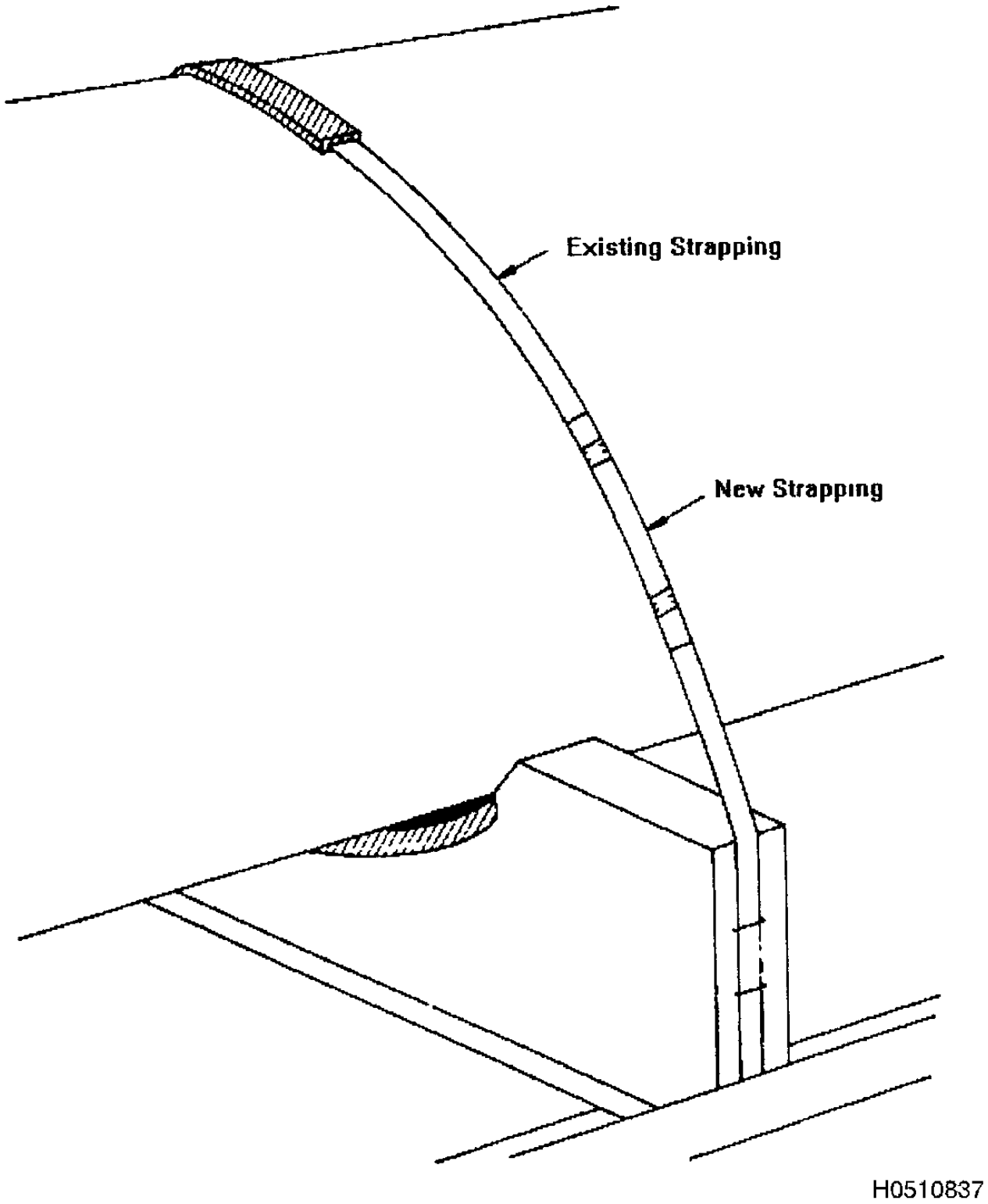

Figure 2-2. Reuse of Existing Strapping

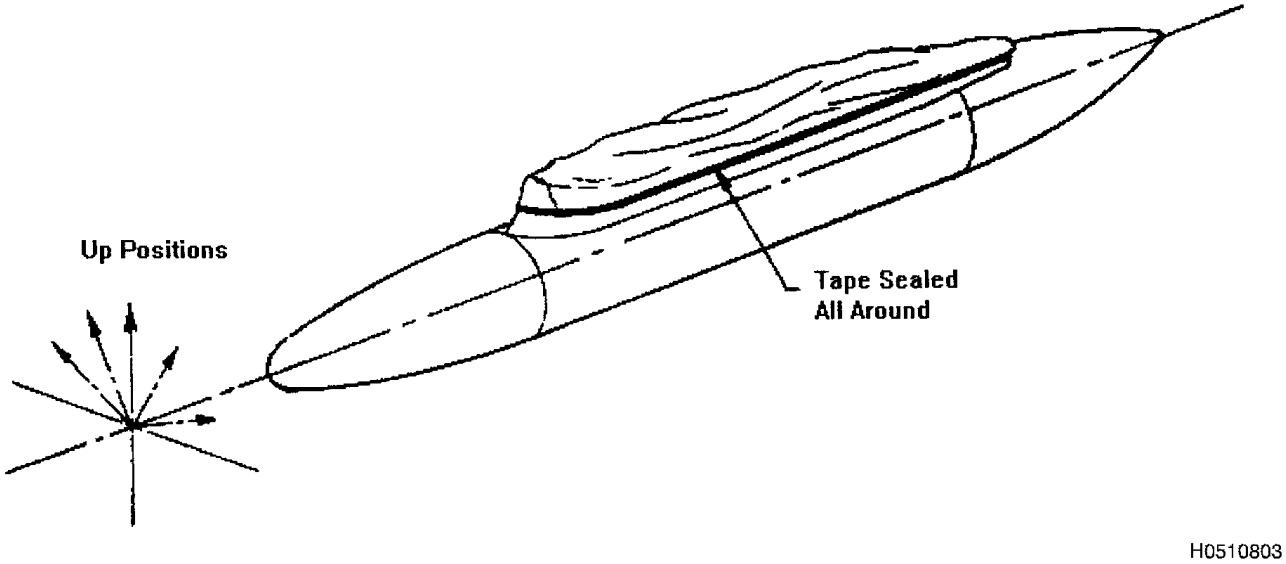

Figure 2-3. Packaging of Pylons Stored in the Up Position

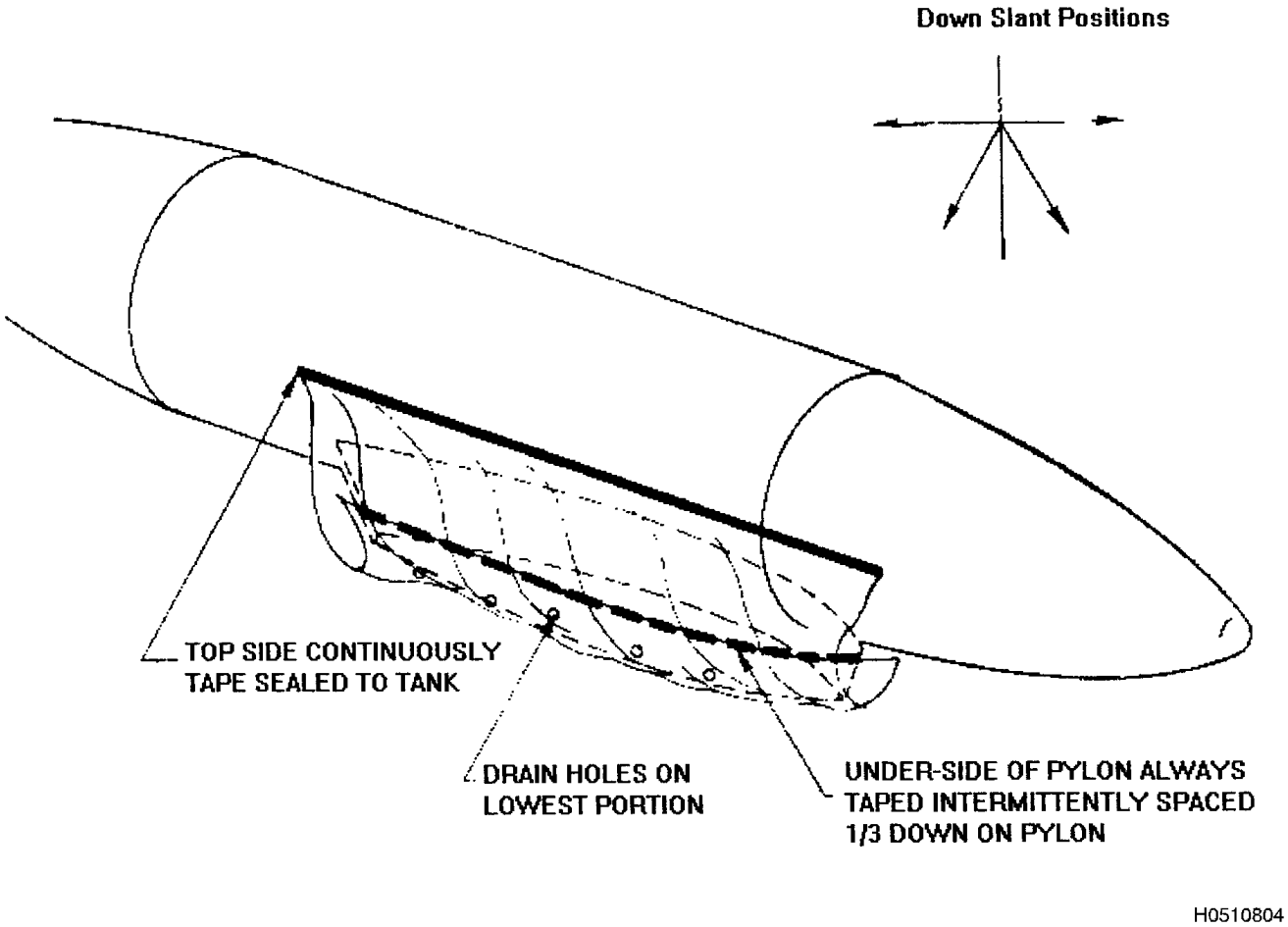

Figure 2-4. Packaging of Pylons Stored in the Down Position

CHAPTER 3
NESTED TANKS

3.1 GENERAL.

Nested tanks shall be preserved, packaged, packed and prepared for storage in accordance with Method 50 of MIL-STD 2073, and the appropriate Tank T.O. or SPI. Unpackaging and repackaging of nested tanks shall be in accordance with the manual on "Handling Instructions; Packaging, Assembly and Installation" for each specific item which is furnished within each packed container except that leakage test shall be 3 psig in lieu of 5 psig. Polypropylene cushioning in accordance with PPP-C-1797 should be substituted for paper products where cushioning is needed and also to prevent chafing.

WARNING

Prior to opening metal containers, the 3/8 inch NPT plug or the pressure relief valve on one end of the container shall be removed. The container is not pressurized; however, as the temperature increases, the air trapped within the container expands and creates a pressure.

3.2 HANDLING PRECAUTIONS.

In addition to the handling precautions set forth in paragraph 1.4, the following precautions shall be exercised:

a. Containers loaded with nested tanks shall be transported by lifting from the base of the container. Metal containers that do not have the skid modification should be lifted with the forklift forks positioned under the two center roll rings. This procedure will prevent any indentations or deformations to the outer surface of the container. Do not lift containers using the handling rings located in the center of the container.

b. When removing the contents of the packed containers for inspection or assembly of the tanks, extreme care shall be exercised to prevent any dents, scratches or gouges to any of the surfaces of the tank components. Care shall also be exercised to insure that all components such as nuts, bolts, and seals are accounted for and not discarded with any of the removed cushioning or blocking and bracing materials.

c. When nested fuel tanks are removed from the containers for assembly purposes, a cursory inspection shall be made of the empty containers in accordance with paragraph 3.8 to obtain an estimate of the quantities of serviceable, reparable, and condemned containers. The estimated data shall be provided to the appropriate Item Manager for determination of possible further use or other disposition to be made of the containers. If further use for their original purpose is determined to be required by the responsible Item Manager, then an accurate inspection and classification will be performed in accordance with paragraph 3.8 and a listing of quantities of serviceable, reparable and condemned containers available for final disposition prepared in accordance with instructions by the Item Manager.

3.3 STORAGE.

3.3.1 Nested tanks packed in sealed, desiccated metal containers conforming to Specification SAE 1967 or equivalent do not require closed or shed storage.

3.3.2 For outside storage, the end of the container on which the humidity indicator is located should be placed so that direct sunlight will not strike the humidity indicator. This will reduce the chance of obtaining inaccurate readings.

3.3.3 Containers may be stacked up to four high if properly anchored.

CAUTION

Stacking of containers without stacking provisions generally result in damage to the containers.

3.4 PACKING AND UNPACKING.

In addition to the requirements in paragraph 3.1, the following instructions apply to the unpacking and repacking of nested fuel tanks in containers when internal inspection or repair is necessary. Packing and unpacking fiberglass containers will be in accordance with the applicable tank/container TO or the instructions furnished with the container. Cylindrical metal containers can be packed and unpacked as follows:

a. Contents of container may be extracted and reinserted by the use of equipment shown in Figure 3-1 through 3-9.

b. For containers without skids, place container on fixture as shown in Figure 3-1, and make ready to remove main pack(s) in accordance with manual on handling instructions referenced in paragraph 3.1. When ready to remove main pack(s), attach appropriate pull cable, Figure 3-9, to the applicable main pack, then attach winch cable to the pull cable, to initiate removal of main pack from container, see Figure 3-2. Spreader bar(s), Figure 3-3, with webbing straps, Figure 3-4, shall be installed successively as pack is being extracted. Slight hoisting of the pack will facilitate sliding of the pack.

c. Containers with skids will require the use of rolling rings, Figure 3-5, for removal of main pack and also for rolling the container 180 degrees to remove parts such as pylons, tubes, etc., that are attached to the inside of container. The equipment in paragraph 3.4, step b. will be employed for removal of main pack.

d. If serviceable empty containers are available for the item, they should be onsite to enable direct transfer of contents from damaged to serviceable container.

NOTE

When using substitute container(s), the serial numbers for previous contents shall be obliterated and serial numbers for current contents shall be marked on the container(s). If delay in repacking is necessary due to container repair, then the contents should be temporarily stored and covered to protect against moisture, dust, loss, or damage.

e. For a fast, smooth extract insert operation, two winches are required - one attached to fixture for removing the main pack, Figure 3-6, and the other on a portable stand for insertion of pack(s), Figure 3-7, into the container. However, the operation could be accomplished with the use of a portable winch, Figure 3-7, by locating it as necessary for the extraction or insertion process.

NOTE

As an alternative, containers may also be unpacked by using a utility vehicle such as a forklift or tug with a cable assembly as shown in Figure 3-9.

f. After all the contents are inserted, service and close the container in accordance with applicable documents.

g. To eliminate the entrapment of moisture between the container cover and the clamping ring, the clamping ring shall be positioned so that the bolts are located in the 12 o'clock and 6 o'clock position.

3.5 MARKING.

Marking requirements of interior and exterior containers shall be in accordance with Specifications MIL-STD-2073, MIL-STD-129 and the appropriate SPI.

3.6 PERIODIC INSPECTION OF LOADED CONTAINERS.

The humidity indicator in each container shall be inspected once a month to determine replacement of desiccant. The indicator should be inspected during the early morning hours before sunlight strikes the container or during overcast, fog-like conditions. When the humidity indicator is pink or reads over 40 percent RH, the desiccant shall be removed and replaced by

thoroughly dried desiccant. The item contained shall not be removed unless evidence of corrosion on the item is found. If within 12 months the humidity indicator again turns pink, then the container shall be examined for sources of leakage and repaired prior to replacing the desiccant.

NOTE

Upon identification of a container with punctures or high humidity, the container shall either be repaired within 30 days or moved indoors to a temperature regulated environment.

Table 3-1. List of Illustrations

Figure No.	Title	AF Drawing No.
3-1	Positioning Rolling Rings and Canister on Fixture	
3-2	Fixture with Trolley, and Hoists	7147553
3-3	Spreader Bar	7147555
3-4	Webbing Strap	7147556
3-5	Rolling Ring	7147557
3-6	Stand Winch	7147554
3-7	Portable Winch Stand	7147558
3-8	Canister Holding Fixture	7147550
3-9	Puller Cables	7051223
3-10	Skid and Stacking Lugs	
3-11	Handling Device	

3.6.1 Before performing any work on the container, safety check the interior of the container with a combustible gas indicator (as specified in TO 1-1-3, paragraph 2.6.3.1) to obtain a lower explosive limit (LEL) reading. If there is fuel in the container and the reading is above 5 percent LEL, the container shall be depuddled and ventilated until the reading is below 5 percent LEL. Depuddling may be accomplished by using absorbent cloths, sponges, mops and approved safety container or an approved air operated vacuum, IAW TO 1-1-3, Chapter 5. At this time, a warm air heater may be used to further dry the interior of the container. The heater shall be used in accordance with T.O. 1-1-3, Chapter 5. The container shall be serviced by repairing all damaged areas that could cause the entrance of moisture. The desiccant shall be replaced, and the container shall be pressure checked in accordance with paragraph 3.8.1.2 to ensure that all of the repairs are satisfactory.

WARNING

LEL readings prior to performing hot work (cutting, welding, soldering, or any other operation that can provide a possible source of ignition) shall be less than 1.5 percent LEL (minimum requirement). Special care must be taken to eliminate the combustion hazard associated with hot work. Approval for hot work in confined spaces shall be obtained from the base fire department. To prevent accidental death, injury or damage to the container under repair, the requirements of TO 1-1-3, Chapter 5, and applicable AFOSH standards shall be followed.

3.7 CONTAINER INSPECTION AND MINOR REPAIRS.

3.7.1 Inspect each loaded container for discrepancies which directly affect the nested tanks such as puncture(s), unsafe humidity indication, deep dents, as well as for those which affect the container storage life and handling such as gouges, corrosion, and damaged devices. DO NOT open the container unless there is an indication of 40 percent or higher humidity or the container is damaged to an extent dictating inspection of nested tanks for corrosion and possible represervation (see paragraph 3.1 and paragraph 3.4). When nested tanks are removed, the empty container shall be inspected and classified and if more expedient, may be replaced with a serviceable container in accordance with paragraph 3.8. Maintenance/repair priorities for correction of periodic inspection discrepancies shall be scheduled in some logical order to insure accomplishment first of the major (urgent) discrepancies and lastly those determined as minor defects, e.g., (1) puncture(s); (2) 40 percent humidity indication; (3) dent(s), not within tolerance; (4) gouges and scratches not within tolerance; (5) heavy corrosion; (6) damaged devices which impede proper servicing and/or handling; (7) other than heavy corrosion; (8) general

flaking of paint; (9) badly eroded paint or faded identification markings; and (10) scratches, nicks, and minor paint flaking, etc. Combinations of the listed elements and/or operational needs may dictate assignment of higher intermediate priorities. Temporary sealing of punctures, cracks or holes may be affected on containers pending denesting (waiting period may be extended provided humidity indication remains below 40 percent) by application of weatherproof tape, three inches wide, NSN 8135-00-059-9062, conforming to Specification SAE AMS-T-22085. Tape must be applied without stretching and firmly pressed onto a clean dry surface. Leaks caused by metal corrosion occurring beneath the roll rings may be temporarily repaired in the following manner. Make repairs by forming a minimum 1/4 inch bead on each side of the roll ring using a sealing compound equal to R-900 butyl sealant. Apply sealant around the perimeter of each ring where leaks are detected. When severe rust is present, apply one coat of primer equal to MP-150 primer prior to applying the sealant. A heavier portion of sealant may be required where the rings have been bent or separated from the body of the container. The sealant and primer may be obtained from ADCO Products Inc., Michigan Center, Michigan 49254. The primer is applied by brushing with a one inch brush. Spread the primer approximately one inch along the area to be sealed. Apply the sealing compound using an ordinary manual caulking gun.

WARNING

For safety of personnel performing wire brushing, wear protective clothing and eyeglasses or a full-piece face shield, L-F-36.

3.7.2 An alternate method of repair is to remove the corrosion by wire brushing and applying a 1/4 inch x 1/8 inch bead of EC 5354 tape where the rings have been bent or separated form the body of the container. The tapes may be obtained from Minnesota Mining Manufacturing Co., St. Paul MN 55101.

3.8 GENERAL INSPECTION AND CLASSIFICATION OF EMPTY CONTAINERS.

3.8.1 Inspection.

3.8.1.1 All containers shall be inspected prior to use for the specific purpose of determining whether they are serviceable, reparable or are to be condemned.

3.8.1.2 Inspection shall be performed by authorized Air Force maintenance personnel and/or contractor personnel as follows:

a. Inspect all bolts and nuts for cracks, burrs or defective threads.

b. Inspect container surfaces for cracks, burrs, elongation, misalignment or other defects that affect serviceability.

NOTE

Inspect clamp ring bolts and tank and accessory suspension system bolts particularly for cracks or other defects.

c. Inspect braces, lifting rings, eyes or lugs, roll over rings, desiccant holder, seals, and assembly guides for cracks, ruptures, deterioration, misalignment, and other defects.

d. Inspect the seals and gaskets. Replace if seals or gaskets show a permanent deformation or set, cuts, abrasion or any other surface defects which would affect sealing of the container. Seal or gasket material shall conform to the original specification.

e. Inspect the container body and covers for ruptures, cracks, holes (see paragraph 3.10.1.2, step d), gouges, scratches (see paragraph 3.10.1.2, step c), and dents (see paragraph 3.10.1.2, step b).

f. Inspect chimes and cover seal cavities for cracks, dents, misalignment, or other defects.

g. Inspect tank and accessory mounting brackets, rails, and assemblies for sharp, knifelike edges.

h. Inspect skids for cracks, dents, rust, and other defects that affect serviceability.

i. Inspect containers for compliance with applicable time compliance technical orders.

WARNING

For safety of personnel performing the leak check, all clamp ring bolts on the container should be installed and tightened to prevent an explosion during pressurization.

j. Inspect for leakage by pressurizing metal containers to three pounds per square inch gage (psig) and fiberglass containers to one pound per square inch gage (psig). Allow the container to remain pressurized and recheck the container after 15 minutes with an accurate pressure gage, making any necessary corrections for ambient temperature change by using the rule that for each degree Fahrenheit, a 0.04 psig change occurs in the same direction.

NOTE

As an alternate to the above method, containers may be tested for leaks in accordance with instructions in paragraph 3.10.1.1, step d.

3.9 CLASSIFICATION.

3.9.1 Upon completion of the inspection, classify the empty container(s) as serviceable, reparable or condemned. Tag the container, using DD FORMS 1574, 1575, 1576, 1577 series condition tags/labels or AFTO FORM 350 as applicable. Determine classification as follows:

a. Serviceable Containers. Empty containers which satisfactorily pass the inspection criteria in paragraph 3.8.1 shall be classified as serviceable. Serviceable classification of stored empty containers shall be verified yearly.

NOTE

Containers from which serviceable tanks and accessories have been recently removed will be considered serviceable providing the humidity indicator (prior to opening the container) indicated a safe moisture level and the general condition of the container and closure seals appear satisfactory.

b. Reparable Containers. Containers that have defective or missing parts, leaks, a badly weathered finish with large areas scraped down to bare metal, or surface defects beyond tolerable limits are considered reparable if the total cost of damage repair and replacement of parts does not exceed the maximum allowable in AFMAN 23-110, Volume 1, Part 1, Chapter 1. Itemize parts to be replaced on DD FORM 1577-2 or 1577-3 as applicable.

c. Condemned Containers. Condemn containers when the cost of repair exceeds the maximum allowable in AFMAN 23-110, cited above.

3.10 REPAIR PROCEDURE FOR REPARABLE CONTAINERS.

3.10.1 General Instructions for Container Repair.

NOTE

Container repair shall be limited to only the repair necessary to insure the container will adequately protect the nested tanks and accessories during shipment. Containers shall not be made in a like new condition for appearance.

3.10.1.1 Minor Repair. Repair of fiberglass containers shall be accomplished in accordance with paragraph 2.10 of this TO and the applicable container TO. Additional repair for metal containers shall be as follows:

a. Repair or replace damaged or missing parts. Replace fastenings on the tank and accessory suspension system with self-locking nuts, cotter keyed castellated nuts, or safety wired fasteners as appropriate.

b. Secure all unattached parts required for complete tank and accessory installation in their proper places in the container. Remove foreign material and rust on the inside of the container and prime as required with primer, Specifications TT-P-1757 or TT-P-664. Small areas, 2 square feet or less may be retouched in lieu of complete refinishing. Clean and re-prime the gasket cavity of the closure covers if required. Painted chimes must be thoroughly dry prior to final assembly to avoid adherence of the seal to the chime.

c. Provide new gaskets and seals if needed. Flat type gasket shall be cemented to the instruction receptacle cover.

d. Perform leak test of the container as follows:

(1) Pressurize metal containers to 3 psig and fiberglass containers to 1 psig. Use the original bolts in the closure clamps if serviceable after inspection as prescribed in NOTE, paragraph 3.8.1.2, step a. and 3.8.1.2, step b.

(2) Locate leakage, if indicated by the application of a soap solution, NSN 8520-00-228-0598. Apply solution to all welds, around the closure clamps and chimes, humidity indicator, closure clamp bolts, and any other closure on the container.

e. Remove foreign material and rust from the outside of the container. Prime surface (see paragraph 3.10.1.1, step b.) to be repainted and paint, as required, with enamel, olive shade Federal Standard 595/34088. Small areas, 2 square feet or less, may be retouched in lieu of complete refinishing. Data plate and manufacturer's name plate shall be cleaned after painting the container. Re-stencil all basic markings if illegible. Markings shall be in waterproof ink, paint, or decalcomania. Ink shall conform to Specification A-A-208. Decalcomanias shall conform to Specification A-A-59485. Paint shall conform to Specification MPI-8. Color of marking shall be white conforming to color number 37875 in accordance with Federal Standard 595. Apply the following markings if illegible or missing on all containers at the locations and in the sizes indicated.

NOTE

For minor stenciling and areas where using a spray gun is not practical, pressurized spray paint. Specification A-A-2787 may be used.

(1) Adjacent to the lifting rings, eyes or lugs, in two-inch letters:

LIFT HERE

Arrow five inches long shall point to the rings, eyes, and lugs.

(2) On opposite sides of the upper half of the container, corresponding to lift truck openings, in four-inch letters:

DO NOT DROP
DO NOT SET ON END

(3) Adjacent to the plug-type humidity indicator in one-inch letters:

HUMIDITY INDICATOR

(4) On each end of the applicable container in two-inch letters:

REMOVE PRESSURE RELIEF PLUG
BEFORE OPENING AND FOR AIR
SHIPMENT

(5) At the center of balance on both sides of the loaded container, a vertical line six inches long and one inch wide with the marking adjacent in one-inch letters:

CENTER OF BALANCE

f. Humidity indicator window shall be checked to ascertain that the window is clear to provide easy viewing of the humidity indicator. The humidity indicator shall be checked for condition. If damaged or missing, repair or install new part(s) as required.

3.10.1.2 Major Repair. Containers requiring repair in excess of that listed above shall be considered major repair. Repair of fiberglass containers shall be in accordance with paragraph 2.10 of this TO. Additional repair for metal containers shall be as follows:

a. Drill or burn a hole in rolling rings, gussets, or pockets to allow free drainage of water that might collect in them on the outside of the container.

b. Repair dents that are more than 1/2 inch deep in the container body. Dents in the roll rings are acceptable as long as 1/2 of the crush distance remains.

c. Repair scratches and gouges whose depth exceeds 1/3 of the surface material thickness by fill welding.

d. Repair holes and ruptures by hot forming the flange portion of the torn metal to flush position. Cracks or slits of approximately 1/16 inch gap may be closed by fill welding. If the gap cannot be fill welded or is the result of structural failure, then a suitable patch shall be welded on. Make patches from 16 gage cold rolled steel (CRS) and extend the edges of the patch at least 1/2 inch in all directions beyond rupture.

e. The alternate method of repair for loaded containers is by using steel molding compound, NSN 8030-00-670-5556, on a properly prepared surface, and/or use of a metal patch, dependent upon the area requiring the repair.

f. Restore dented or deformed closure clamps and chimes by means of hot forming and hammering; check by suitable gages.

g. Grind off sharp, knifelike edges on tank and accessory mounting brackets, rails, and assemblies.

h. Rework container to the latest configuration as directed by applicable time compliance technical orders.

3.10.2 The Air Force has a film on the repair of containers entitled, "External Fuel Tank Container Repair," (VTT-D2-61/201BL).

3.10.3 Containers that are serviceable or reparable shall have the humidity indicator nut tack-welded to inside of container cover. This will provide a capability for removal and replacement of indicator without removing container cover. To aid in this area, skids and stacking lugs have been developed (see Figure 3-10) and tested for container assemblies W27-450-5288, 32-650-5458, F-27-450-5287, 501902-1, 501902-9, and 26-370-5510.

3.11 MODIFICATION PROCEDURE FOR CONTAINERS WITHOUT SKIDS.

NOTE

Some of the most typical types of damages incurred to these containers (without skids) have been broken lifting/handling devices, dents and holes in the container walls at welded points near rolling rings, all resulting in excessive man-hours to repair and re-preserve the assets. It has been determined that damage of this type is directly attributable to the lack of adequate handling and stacking provisions. To eliminate this condition, specification design changes have been made to improve the container's handling and stacking features. Changes in the specification have resulted in a large reduction of damage to new containers; however, it did not solve the problem of the thousands of old style containers already in the field.

3.11.1 Modification of containers may be accomplished concurrently with container repair or TCTO of tanks.

3.11.2 Selection Of Containers.

3.11.2.1 Maintenance/modification priorities for correction of handling and stacking deficiencies shall be determined by the Item Manager.

3.11.2.2 Selection of containers for modification can be made during periodic inspection (see paragraph 3.6) and modification may be accomplished during the scheduled maintenance/repair.

3.11.3 Preparation Of Container. Container should be made in serviceable condition (paragraph 3.10) except for the existing handling devices (see Figure 3-11). These old handling devices should be removed with acetylene torch or hacksaw if they extend beyond the limits of maximum displacement of the container (see Figure 3-11).

3.11.4 Modification Of Container.

3.11.4.1 Skids and channels may be assembled prior to welding to container. The skin seam on the bottom of the container may be used to center the skid assembly. When rolling rings have dents where skids are to be located, shims made of material

conforming to steel, Specification QQ-S-698, shall be used. Gussets shall also be attached as shown on Air Force Drawing 7147541.

3.11.4.2 Stacking pads shall be attached to container as shown in drawing 7147541. A template or jig may be used to locate and/or hold pads during installation.

3.11.4.3 Container finish and markings shall be as specified in paragraph 3.10.1.1, step e.

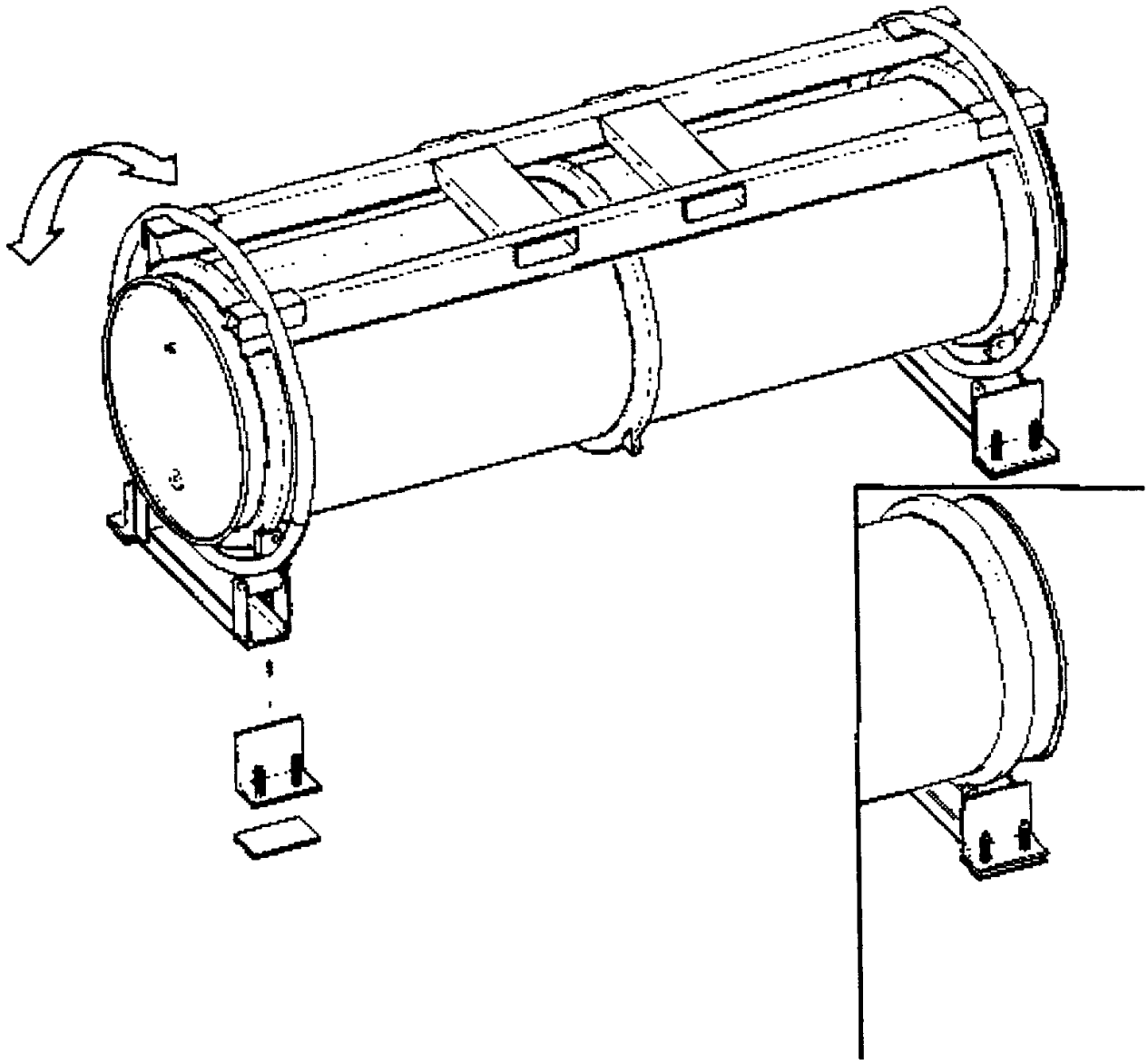

Figure 3-1. Positioning Rolling Rings and Canister on Fixture

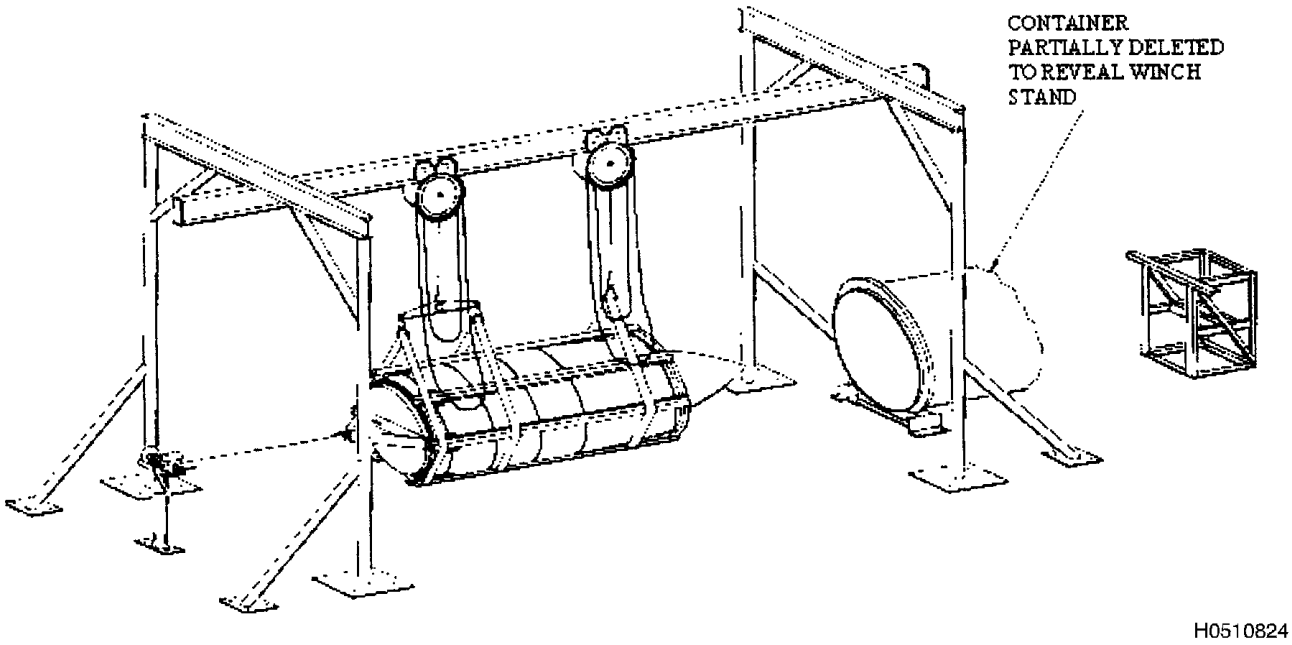

Figure 3-2. Fixture with Trolley and Hoists

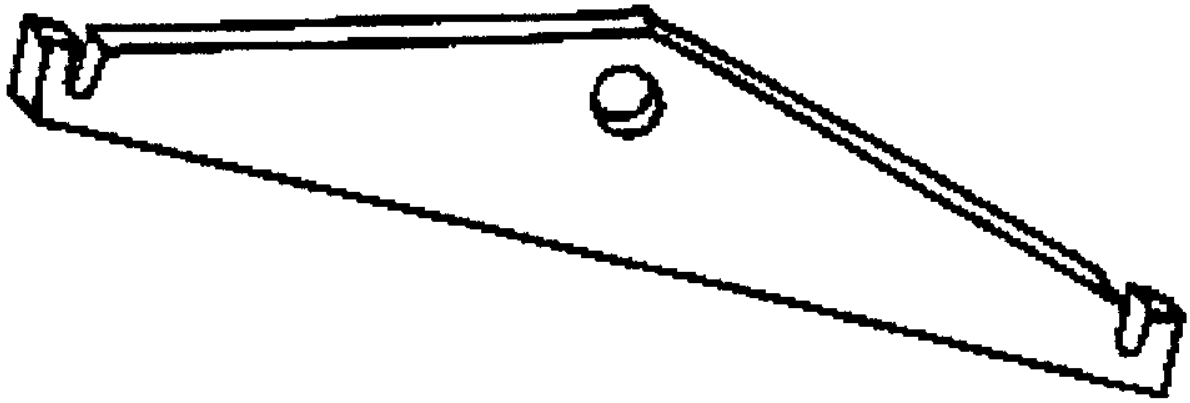

H0510825

Figure 3-3. Spreader Bar

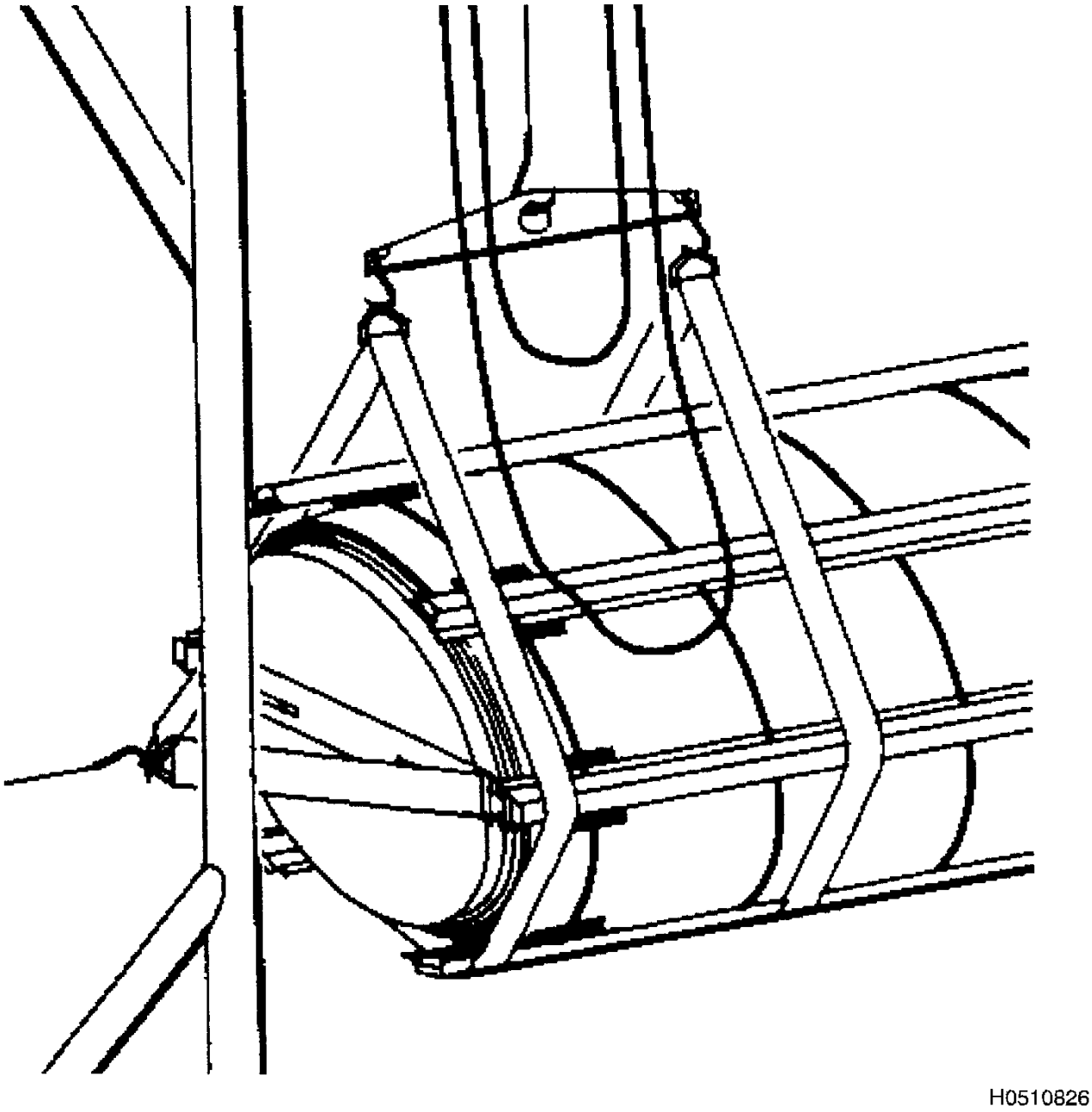

Figure 3-4. Webbing Strap

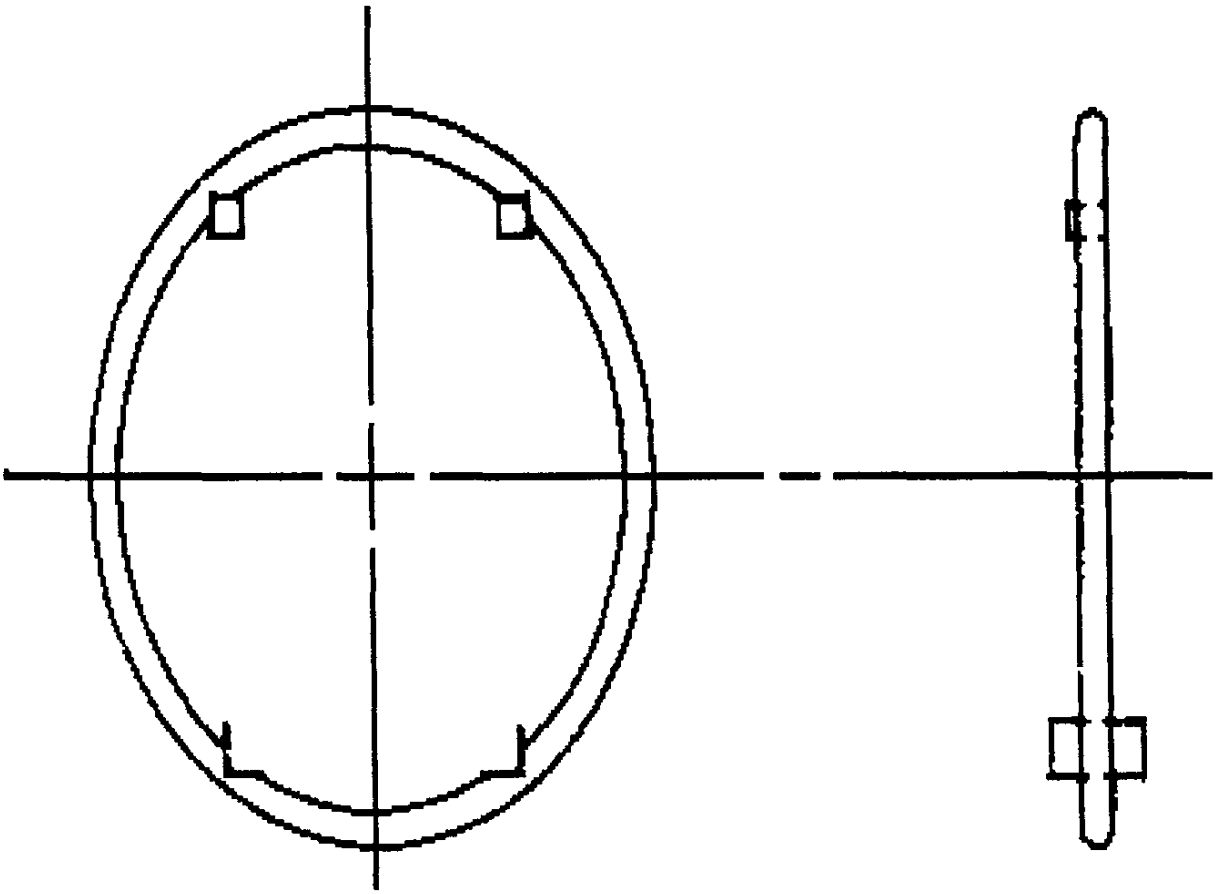

Figure 3-5. Rolling Ring

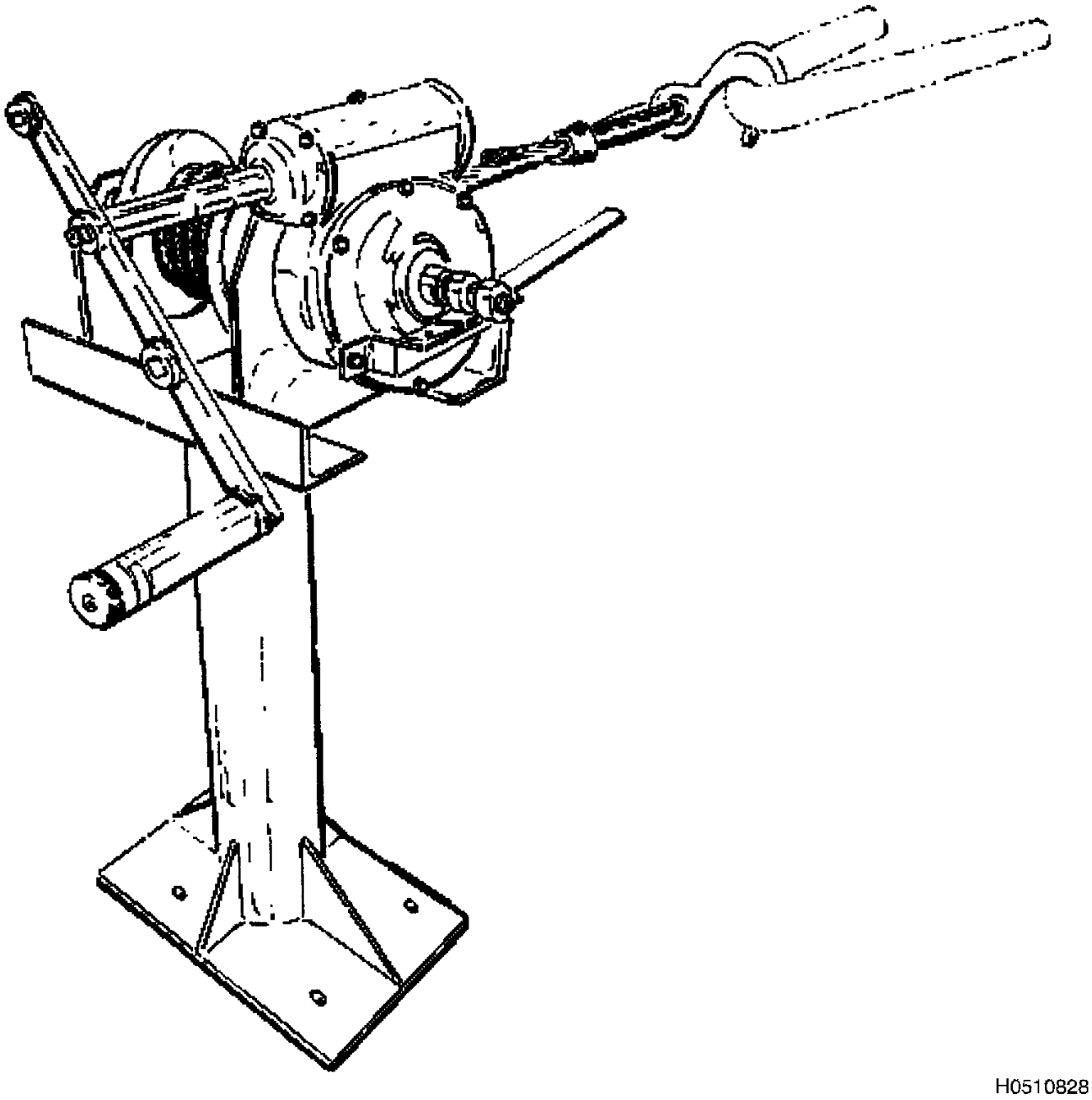

Figure 3-6. Stand Winch

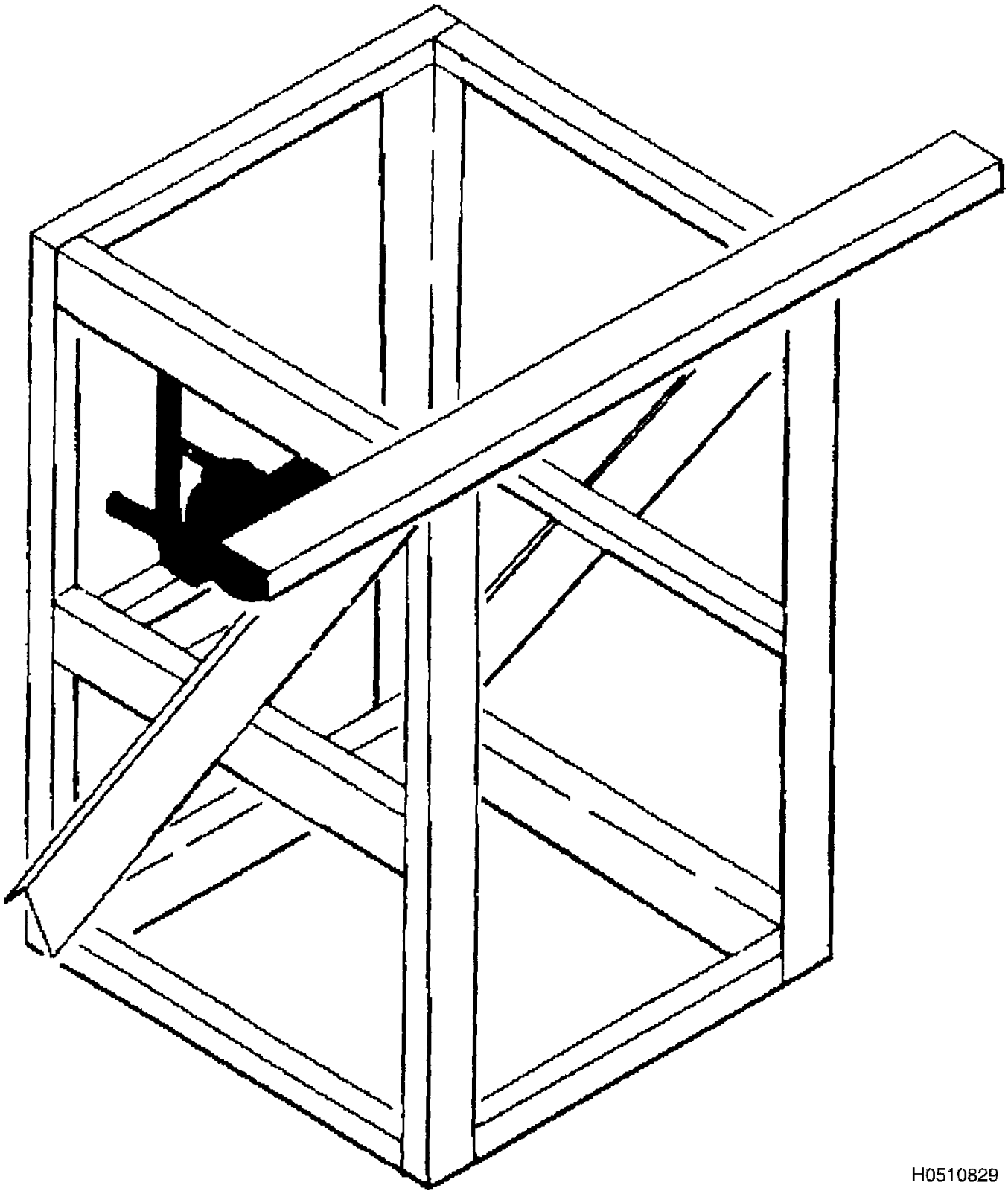

Figure 3-7. Portable Winch Stand

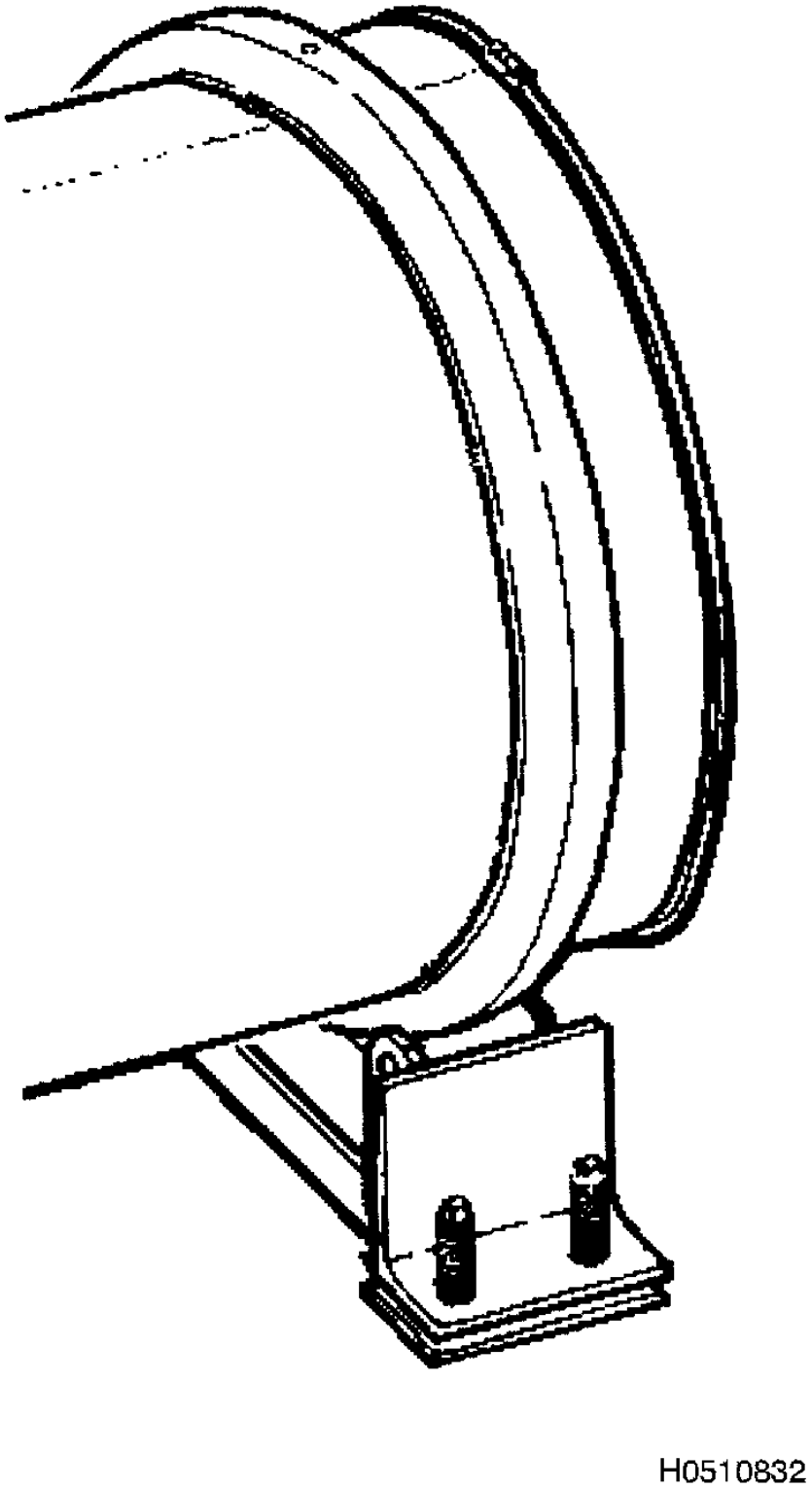

Figure 3-8. Canister Holding Fixture

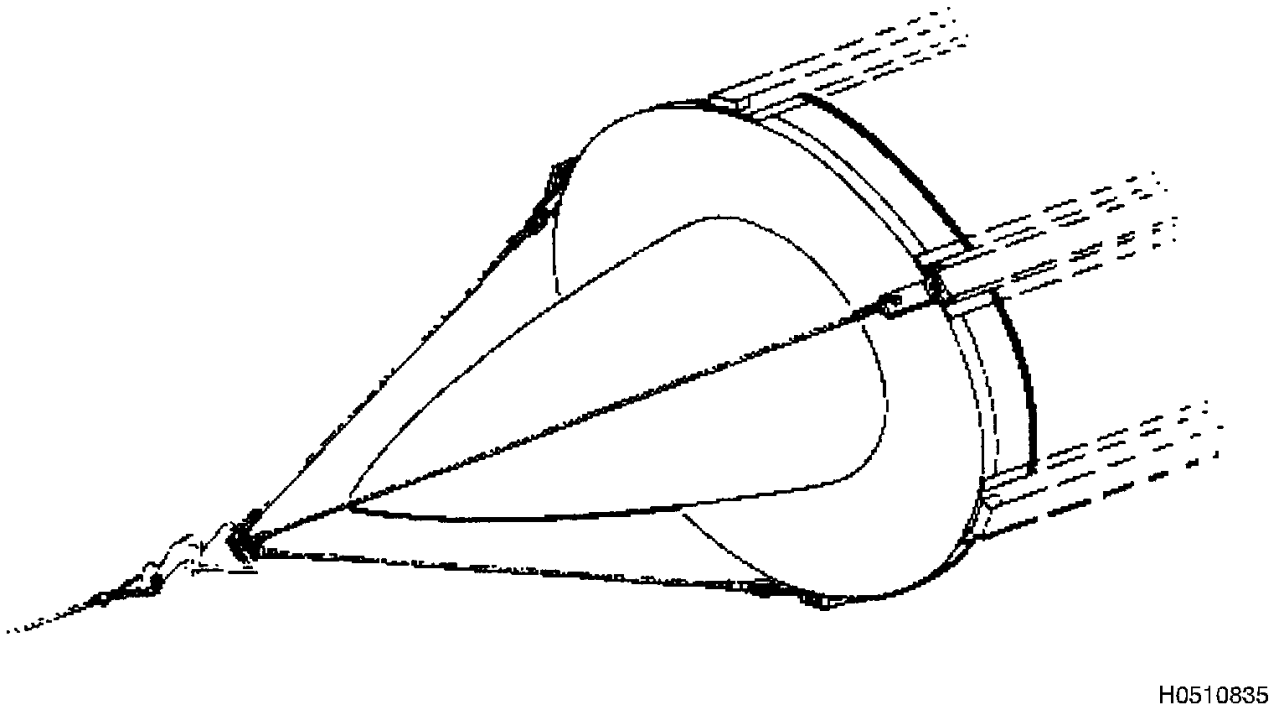

Figure 3-9. Puller Cables

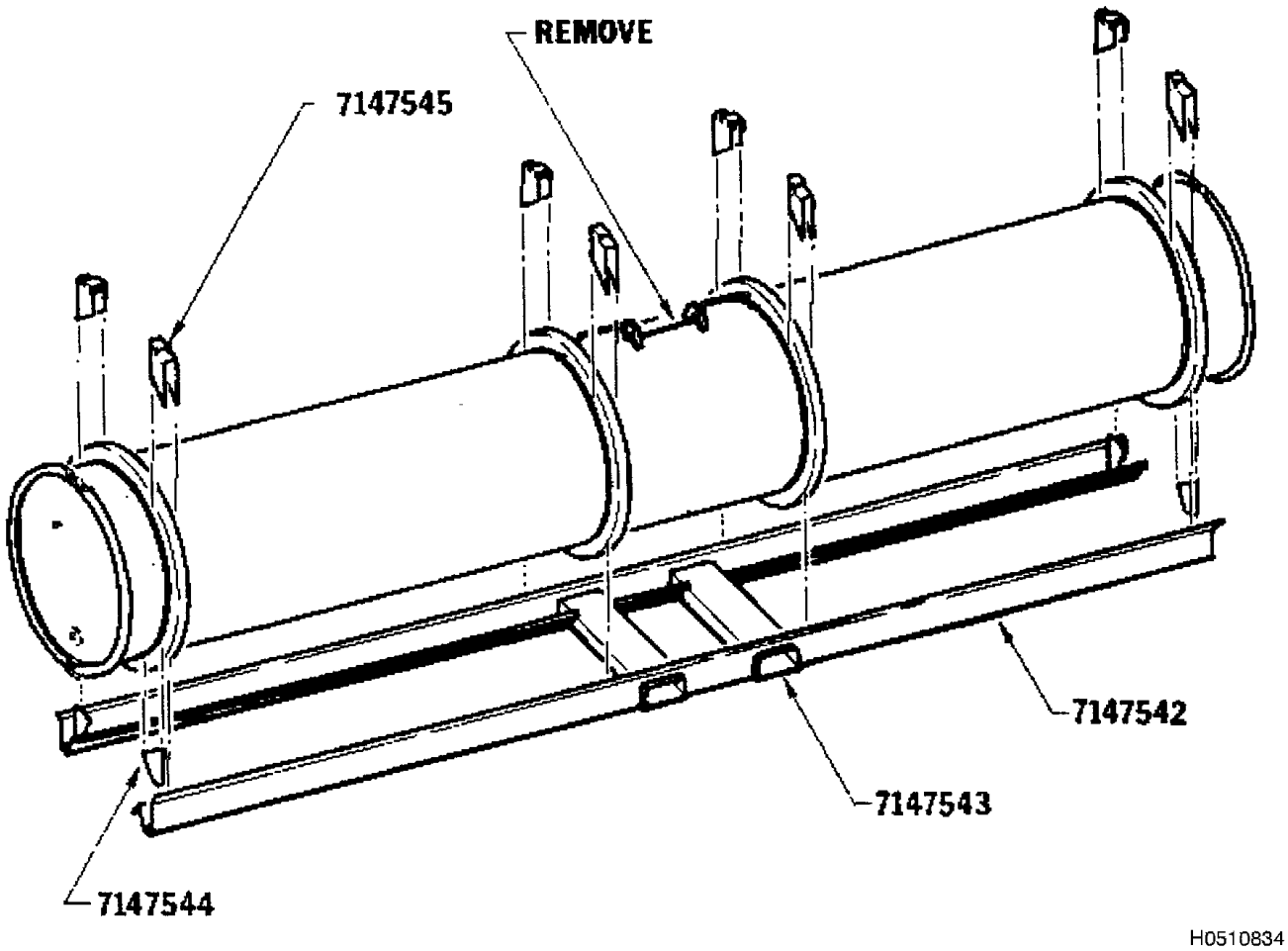

Figure 3-10. Skid and Stacking Lugs

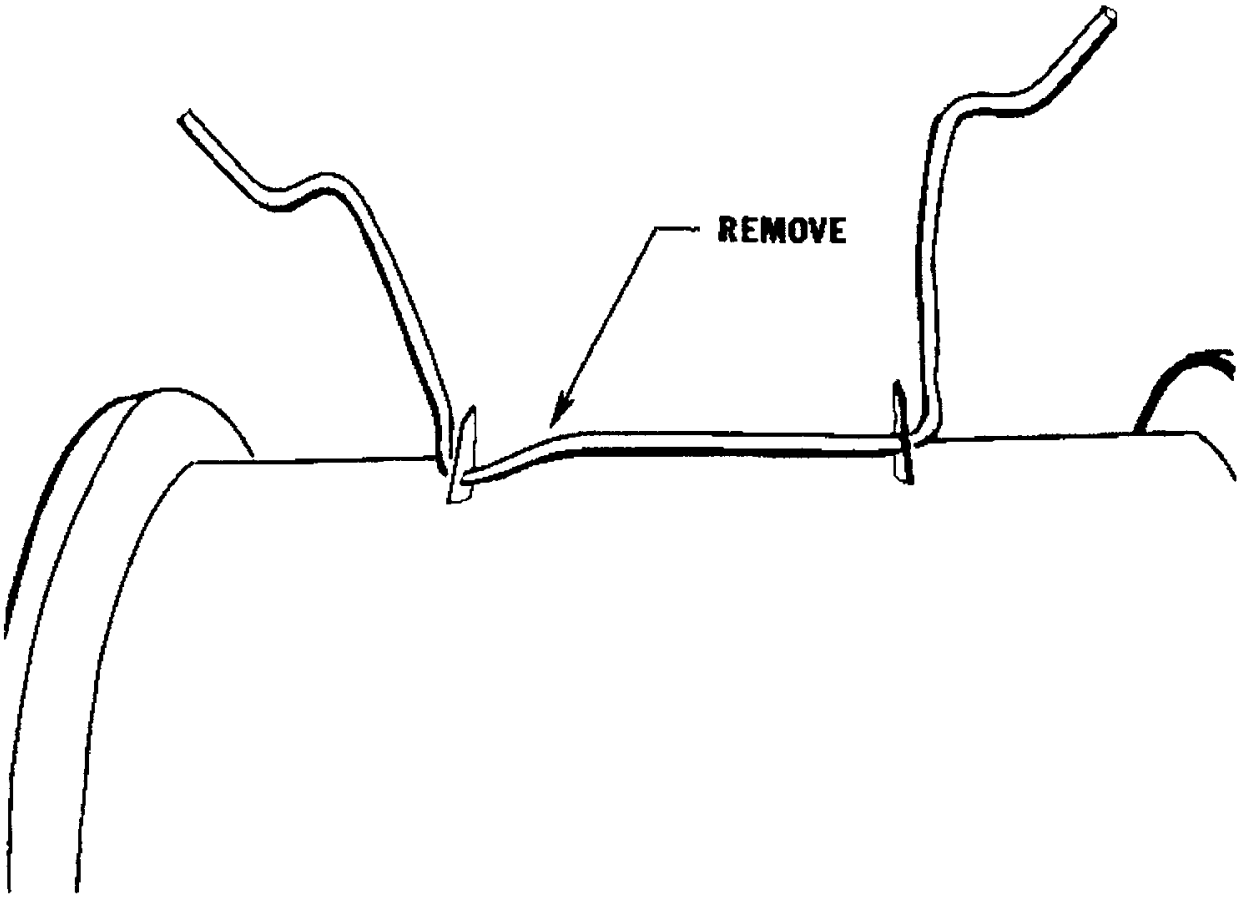

Figure 3-11. Handling Device

CHAPTER 4
FUEL, OIL AND WATER-ALCOHOL CELLS

4.1 GENERAL.

CAUTION

Exercise extreme care with these products. Do not lift or pull on fittings of any kind.

Contrary to their rugged appearance, cells are not as tough and tear resistant as other types of rubber goods such as tires and hose. The outer layer of cord is covered with a thin coat of synthetic rubber plus a coat of BunaVinylite lacquer, which will blister or separate easily if a cell is flexed beyond reasonable limits or collapsed when in rigid condition due to low temperature. Protruding fittings can be weakened and broken if cells are not handled with care. Fittings, regardless of type, shall not be used as a hand hold. Any undue strain exerted on the fittings may cause a failure. In addition to the general instructions enumerated in Chapter 1 and Chapter 3, the following special instructions shall apply.

4.2 SELF-SEALING FUEL AND OIL CELLS.

4.2.1 All cells in the self-sealing group are manufactured in accordance with Specification MIL-T-5578 and includes the exception of Specification MIL-T-6396, Type III, listed in 4.3.1, step c.

4.2.2 Additional detailed instructions for the self-sealing cells shall be adhered to. They are as follows:

a. Self-sealing cells shall not remain in a collapsed condition for longer than one hour.

b. Large access openings shall be covered with cell door cover or plywood that has been cut to fit.

(1) A minimum of six bolts shall be used to hold cover in place.

(2) Bolts shall never be more than finger tight.

(3) It will not be necessary to cover or tape over door covers.

(4) When access doors are removed and scheduled for storage with the cell they shall be preserved and sealed in bags fabricated from barrier material, Specification MIL-PRF-121.

c. Self-sealing cells.

(1) Self-sealing cells shall be supported by exterior hangers or supports to prevent collapse. End grain nailing shall not be depended upon because of the danger of splitting and the poor holding ability of nails in end grain wood. When such hangers are not available, the cells shall be blocked internally with a suitable framework constructed of a compatible material.

CAUTION

When packaging and packing of collapsible type cells of a size and configuration that requires a wooden container, caution should be exercised to prevent damage to the cells by internally exposed or protruding nails. To preclude this type of damage, a demountable type container, assembled with fasteners other than nails or screws, may be used. The use of this type container not only eliminates the exposed nail condition, but also provides for the application of a reusable container.

(2) Exterior containers shall conform to Specification PPP-B-576, PPP-B-591, ASTM D 6251, ASTM D 6880, ASTM D 5168 and ASTM D 6256, as applicable.

4.3 BLADDER TYPE FUEL, OIL AND WATER-ALCOHOL CELLS.

4.3.1 Bladder type cells are manufactured only under Specification MIL-T-6396 and are identified on their markings by Specification MIL-T-6396, Type II. Type II can be further distinguished by the fact that:

a. Type I is metallic.

b. Type II is very flexible (bladder type).

c. Type III exhibits fair rigidity and therefore is an exception to the bladder type cell (see paragraph 4.2.1).

4.3.2 Additional detailed instructions for the bladder type cells shall be adhered to. They are as follows:

a. Flexing of cells shall not be attempted until cell temperature is at or above 65°F.

b. Each bladder type shall be folded as specified in the applicable SPI. In addition, each bladder type cell shall be folded using a single layer of bubble wrap, NSN 8135-00-926-8991, in each fold, except for the final two folds made in the cell. A roll or tube of single-faced corrugated fiberboard, not less than four inches in diameter, shall be inserted inside and adjacent to each fold to prevent creases. The cell shall not be compressed excessively.

c. Cells shall be wrapped in a waterproof barrier and sealed with a waterproof tape. Barrier material conforming to Specification PPP-B-1055 and tape conforming to Specification ASTM D 5486 are suitable for this protection.

d. Cells may also be protected from moisture by placing in a heat sealable, flexible transparent bag, fabricated from material conforming to Specification MIL-B-22191, or by enclosing cell within a transparent or opaque plastic bag fabricated from material conforming to A-A-3174.

e. An exterior container should be selected that will fit the folded cell and not permit shifting.

f. Do not use a heavy paper, cardboard or fiberboard for cushioning. Bladder type cells are easily abraded by these materials.

g. Exterior containers shall conform to Specification ASTM D 5168, ASTM D 6251, or ASTM D 6256.

4.4 GOODYEAR NYLON (VITHANE) FUEL CELLS.

Vithane fuel cells are similar in appearance to and shall be handled the same as bladder type cells except for the treatment of the inside of the cell. Used vithane fuel cell shall be cleaned with soap and warm water prior to storage.

4.5 GOODYEAR NYLON PLIOCEL FUEL CELLS.

4.5.1 Pliocel fuel cells are similar in appearance to and shall be handled in the same manner as Fuel, Oil and Water-Alcohol Cells, paragraph 4.1, Bladder Type Cells, paragraph 4.3, and Four and Five Sided Wing Cells, paragraph 4.6.

NOTE

Pliocel fuel cells scheduled for short or long-term storage, not disturbed or removed from their cavities, do not require any type of preservation.

4.5.2 The interior surface of pliocel cells shall be treated with a solution of equal parts of water and glycerin. Glycerin, NSN 6505-00-153-8220 is suitable for this purpose. The solution shall be sprayed into the cells with an air-operated spray gun.

4.6 FOUR AND FIVE SIDED WING FUEL CELLS.

4.6.1 The four and five sided wing cells used on B-52 aircraft require special treatment when not in the aircraft. Because of the peculiar design, it is not possible to seal off the cells to prevent entry of foreign matter; therefore, the cells shall remain in the shipping container until just prior to installation in the aircraft. The container shall be used to return the reparable cells to repair facilities, or to the packaging or storage facilities.

CAUTION

One hour is the maximum time permitted for four and five sided cells to remain in a collapsed or folded position. Do not handle or fold cells if temperature of cell is below 65°F. Do not allow hot air in excess of 120°F to be concentrated on cell inner liner. Ideal temperature for handling cells is approximately 70°F, with 65°F minimum to 120°F maximum permissible.

4.6.2 A protective split hose is provided with new or serviceable cells to protect the beads. This protective hose must be removed from new or serviceable cells when installation in the aircraft is accomplished and placed on repairable cells. If this hose is not available, protective hose may be made from scrap hose which will cover the bead. The protective hose must remain in place through the repair and packaging operation.

4.6.3 A heavy coating of preservative is required because the cells are open, which exposes the oil to evaporation.

4.6.4 Four and five sided cells do not require an interior wrap prior to being packed in the exterior container.

4.6.5 Four and five sided cells shall be supported in the container in their normal open envelope position. The supports may be provided by use of cross members positioned in the container with cleats and holddown blocks.

4.6.6 Exterior containers shall conform to Specification PPP-B-576, PPP-B-591, ASTM D 6251, ASTM D 5168 or ASTM D 6256, as applicable.

4.7 GENERAL PACKAGING, PRESERVATION AND HANDLING PROCEDURES.

4.7.1 Handling Precautions.

4.7.1.1 Place cells on widest and flattest surface that does not have protruding fittings.

4.7.1.2 Flexing of cells shall not be attempted until cell temperature is at or above 65°F.

4.7.1.3 Serviceable and repairable cells must be provided with supports at all times until the cells are placed in the aircraft. If cells are not equipped with internal stiffeners or supports, exterior supports must be provided.

4.7.1.4 Shoes shall not be worn and all tools shall be removed from pockets before entering adequately ventilated cells. Clean cotton socks shall be worn when entering cells.

4.7.1.5 Use only approved explosion-proof lights with adequate guards installed when entering cells.

4.7.1.6 When uncrating cells follow the container opening instructions attached to the shipping container, to prevent damage to cells.

4.7.1.7 Additional information on handling of fuel cells is provided in TO 1-1-3, paragraphs 9.4 and 9.5.

4.7.2 Storage.

4.7.2.1 The rubber used in inner liners of fuel and oil cells is especially susceptible to ozone or weather. Artificial or natural heat, direct natural light, circulating air or drafts are detrimental to all rubber products. Buildings or covered structures shall be provided for the storage of serviceable and repairable cells. The areas selected for the storage of cells shall be capable of providing the required protection against the above mentioned conditions. It is most desirable that the temperature of the storage area be maintained at 45°F to 70°F.

4.7.2.2 Stock shall be arranged and rotated in such a manner so that the oldest cells will be issued first.

4.7.2.3 Properly packaged cells may be stacked in storage but not to the extent of collapsing the lowest package.

4.7.2.4 It shall be mandatory that all fuel cells be inspected annually and assigned a shelf life code in accordance with instructions from the Item Manager.

4.7.3 Interior Preservation.

4.7.3.1 Cells shall be checked with a combustible gas indicator (as specified in TO 1-1-3, paragraph 2.6.3.1) prior to preserving and fogging to insure that a safe condition exists. The combustible gas indicator reading shall be five percent (health safe), of the lower explosive level (LEL). This condition must exist prior to cell being placed in storage or prepared for shipment. The combustible gas indicator may consist of a gas detector.

WARNING

Cells which have contained fuel are potential fire and health hazards. As this condition is recurring after the cell has been purged and placed in storage, every safety precaution shall be used when cells are reopened for inspection. Cleaning and purging of fuel cells shall be accomplished as directed in TO 1-1-3. Prior to making any cell entry, the applicable safety requirements of TO 1-1-3 shall be followed.

NOTE

When cells are placed in service, the fuel has a tendency to extract the plasticizer from the inner liner of the cell. This is true of both gasoline and JP fuel. This extraction of plasticizer is not detrimental as long as fuel remains in the cell, as fuel acts as a suitable plasticizer. When the fuel is drained from the cell the plasticizer effect of the fuel is lost, the inner liner of the cell begins to dry out, and subsequent cracking and checking will occur. When gasoline has been the fuel, the drying out progresses faster than is the case with JP fuels; however, checking will occur regardless of the fuel used. This cracking or checking may penetrate through the inner liner permitting gasoline to attack the cement of the sealant layers of the cell after the cell has been refueled.

4.7.3.2 To prevent the above failure, serviceable and repairable cells which have contained any kind of fuel, shall have the inner lining coated with a thin coating of oil, either Specification MIL-PRF-6081, NSN 9150-00-273-2388, or Specification VV-L-825. This procedure shall be accomplished when it is evident that the cells will remain without fuel for more than 72 hours, or when the cells are prepared for storage or shipment. While in contact with the liner, the oil will act as a temporary plasticizer and will prevent the inner liner from drying out and cracking. If the sealant is exposed on repairable cells, cover the exposed area with tape before oiling. Extend the tape at least 1/4 inch beyond the activated area. This will prevent further activation of the sealant in defective area. Three inch tape conforming to Specification SAE AMS-T-22085, NSN 8135-00-059-9062, is suitable.

NOTE

The lighter viscosities of oil are preferable because they leave a thinner film on the walls of the cells. Do not permit excessive amounts of oil to remain in the cells in pools or puddles.

4.7.3.3 The application of oil coating on the inner liner of the cells may be accomplished by painting, fogging or spraying, whichever is best adapted to the particular cell involved.

NOTE

This procedure may not be required provided the application of oiling has been accomplished in the maintenance repair shops prior to processing the cell to the packaging operation.

4.7.3.4 When oiling of the inner liner is required, it shall be accomplished by fogging with an air-operated spray gun. The cells shall be oiled twice. The second fogging will be done with the cell in the reversed position, so the side that was down during the first fogging will be up during the second. Experience has proved that the first fogging will not oil the top side of the cell satisfactorily.

WARNING

Equipment used in the process of preserving the inner liner of the cells must be powered by air. Personnel shall wear protective clothing and wear a respirator full face-piece, NSN 4240-00-275-3177 and rubber gloves, NSN 8415-00-266-8680, or other suitable equipment approved by bioenvironmental, while accomplishing the fogging of fuel cells. Fogging shall be accomplished in a well ventilated room isolated from personnel not concerned with the fogging operation.

4.7.3.5 Cells containing any excess oil as a result of the preserving process shall be wiped out with lint-free cheese cloth prior to any further processing in preparation for packaging.

4.7.4 Exterior Preservation And Packaging.

4.7.4.1 The exterior surfaces of cells, exposed metal surfaces of fittings and attachments susceptible to corrosion shall be cleaned and preserved in accordance with TO 00-85A-03, or Specification MIL-STD-2073.

4.7.4.2 Care shall be exercised to prevent an excessive amount of preservation compound from being applied to the cell proper.

4.7.4.3 Requirements pertinent to "Preservation, Packaging, and Packing of Rubber and Nylon Fuel, Oil, and Water-Alcohol Cells" are prescribed in the applicable Tank T.O. or the appropriate SPI.

4.7.4.4 Prior to wrapping, all protruding fittings and connections shall be cushioned with a non-corrosive barrier material conforming to Specification MIL-PRF-121, Grade A, and sealed with tape conforming to Specification SAE AMS-T-22085, to prevent chafing or rubbing against the exterior surfaces.

4.8 PACKING.

4.8.1 For further protection of cells, all interior surfaces of containers shall be provided with a liner of double-faced fiberboard.

4.8.2 If the cell is not packed securely in the exterior container, it will move back and forth in the container and scuff or chafe the outer ply of the cell fabric and in due time can cause damage. In the event it is necessary to use a larger container, cellulosic cushioning material conforming to Specification A-A-1898, or equal shall be utilized to fill void area.

4.8.3 The hangers or supports shall be cushioned to prevent puncturing of the cell because of the possible splintering of the wood.

4.8.4 All corners and edges of the internal support framework shall be covered with sufficient amount of cushioning material to prevent puncture of the inner liner of the cells.

4.9 UNCRATING INSTRUCTIONS.

The packer shall attach opening instructions to the outside of the shipping container providing correct opening procedures to prevent damage to the cells. Opening instructions shall include the special marking requirements of paragraph 4.11.2.

4.10 IDENTIFICATION OF PURGING AND PRESERVATION REQUIREMENTS.

The Serviceable Tag, DD FORM 1574, or Repairable Tag, DD FORM 1577-2, shall be stamped "Cell Purged to a LEL reading of 5 percent and Preserved in Accordance with TO 00-85A-03-1" and conspicuously affixed to the exterior of the container. The forms shall be dated to reflect the date of the completed action. This procedure will preclude the handling of cells not properly purged and preserved, will decrease inspection man-hours, and assist in eliminating hazardous conditions.

4.11 MARKING.

WARNING

Nails, tacks, staples or other metal fasteners shall not be used for attaching shipping documents, condition tags, envelopes, packing list, etc. to the sides or ends of containers for fuel cells.

4.11.1 Marking requirements of interior and exterior containers shall be in accordance with Specification MIL-STD-129 and in addition, any special marking as required in the specification or SPI of the applicable shipping container.

4.11.2 Special Marking. The following precautionary marking shall be applied to exterior containers by stencil, label or other appropriate means.

CAUTION

Cell temperature must be at or above 65°F before removing or flexing cells.

4.11.2.1 New cells that have never contained fuel shall be identified on the exterior container with the following legend by a removable tag “New Cell - Purging Not Required”.

CAUTION

When new cells are removed from container, tag stating “New Cell Purging Not Required” will be removed.

CHAPTER 5
MATERIALS AND EQUIPMENT

5.1 MATERIALS.

The materials listed below will be required for compliance with this technical order. Because requirements cannot be predetermined, the material may be requisitioned from the appropriate property classes.

Specification	Nomenclature	NSN	Class	Source
SAE AMS-T-22085	Tape	8135-00-852-8179	8135	
A-A-3174	Polyethylene Plastic 20 Feet Wide	8135-00-579-6487	8135	GSA
A-A-3174	Polyethylene Plastic 12 Feet Wide	8135-00-579-6489	8135	GSA
MIL-PRF-20696	Tarpaulins 16 x 16	8340-00-817-2126	8340	GSA
MIL-D-6054	Drum, Metal		8110	
SAE AS26860	Indicator, Humidity		6685	
See MIL-B-22919	Window, Observation		9330	
MIL-C-6529	Corrosion Preventive Compound	6850-00-281-2031	6850	
MIL-PRF-121	Barrier Material	8135-00-753-4661	8135	GSA
MIL-PRF-131	Barrier Material	8135-00-282-8256	8135	GSA
ASTM D 5330	Tape	7510-00-584-5838	7510	GSA
	Silicone Rubber Sealing Compound	8030-00-809-0607	8030	
	Silicone Rubber Sealing Compound	8030-00-145-0372	8030	GSA
MIL-PRF-81309	Corrosion Preventive Compound, Water Displacing Ultra Thin Film	8030-00-938-1947	8030	GSA
MIL-PRF-6081	Lubricating Oil	9150-00-273-2388	9150	
	Plate Marking		9905	
PPP-C-1797	Cushioning Material, Polypropylene Foam		8135	
SAE AMS-T-22085	Tape	7510-00-059-9062	7510	
MIL-R-6855	Rubber		5330	
	Soap Solution	8520-00-228-0598	8520	
MPI-8	Exterior Alkyd Enamel, Flat		8010	GSA
A-A-208	Ink, Marking		7510	
A-A-59485	Plastic Material, Pressure Sensitive		9330	
A-A-2787	Enamel, Aerosol	8010-01-331-6105	8010	GSA
PPP-B-585	Box	8115	8115	GSA
ASTM D 6251	Box	8115	8115	GSA
ASTM D 6880	Box	8115	8115	GSA
ASTM D 5168	Box	8115	8115	GSA
ASTM D 6256	Box	8145		
PPP-B-1055	Barrier Material	8135-00-171-0959		GSA
MIL-B-22191	Barrier Material Transparent, Flexible, Heat Sealable			
	Respirator	4240-00-275-3177	4240	

Specification	Nomenclature	NSN	Class	Source
	Gloves	8415-00-266-8680	8415	
A-A-1898	Cushioning Cellulosic		8135	GSA
ASTM D 5486	Tape		7510	
VV-L-825	Lubricating Oil		9150	
TT-P-1757	Primer	8010-00-582-5318	8010	
TT-P-664	Primer	8010-00-292-1127	8010	
QQ-S-698	Steel		9515	
	Sealing Compound	8030-00-145-0372	8030	
	Sealing Compound	8030-00-809-0607	8030	
	Sealing Compound	6850-00-880-7617	6850	