(NAVY) NAVAIR 17-15-50.3
(ARMY) TM 38-301-3
(AIR FORCE) T.O. 33-1-37-3
(COAST GUARD) CGTO 33-1-37-3

JOINT OIL ANALYSIS PROGRAM MANUAL

VOLUME III

LABORATORY ANALYTICAL METHODOLOGY AND EQUIPMENT CRITERIA (AERONAUTICAL)

DISTRIBUTION STATEMENT A. Approved for public release; distribution is unlimited. Requests for this document shall be referred to Director, Joint Oil Analysis Program Technical Support Center, 85 Millington Avenue, Pensacola, FL 32508-5020

DESTRUCTION NOTICE - For unclassified, limited documents, destroy by any method that will prevent disclosure of contents or reconstruction of the document.

Published by direction of Commander, Naval Air Systems Command under the
authority of the Joint Oil Analysis Program Regulation.
AFI 21-131 (I)/AR 700-132/OPNAVINST 4731.1B

0817LP1082306

12 Sept 2008

LIST OF EFFECTIVE PAGES

Dates of issue for original and changed pages are:

Original ..... 0 ..... 12 Sept 2008

IRAC #1 through #38 have been incorporated in this revision.

The total number of pages in this volume is 314 consisting of the following:

Page No.	[1]Change No.	Page No.	[1]Change No.	Page No.	[1]Change No.
Title	0	iv blank	0	A-1 - A-287	0
A	0	1-1	0	B-1	0
Flyleaf-1	0	1-2 blank	0	B-2 blank	0
Flyleaf-2 blank	0	2-1 - 2-12	0		
i - iii	0				

[1]Zero in this column indicates an original page.

By Order of the Secretary of the Army:

GEORGE W. CASEY, JR.
General, United States Army
Chief of Staff

Official:

JOYCE E. MORROW
Administrative Assistant to the
Secretary of the Army
0719405

THIS PAGE INTENTIONALLY LEFT BLANK

TABLE OF CONTENTS

Section		Page
I.	INTRODUCTION	1-1
1-1.	Purpose	1-1
1-2.	Applicability	1-1
1-3.	Manual Change Procedures	1-1
II.	AERONAUTICAL EQUIPMENT WEAR METAL ANALYTICAL METHODOLOGY	2-1
2-1.	Methodology	2-1
2-2.	Evaluating Sample Results	2-2
2-3.	Special Instructions	2-4
2-4.	Analyzing Engine/Transmission Test Cell Results	2-5
2-5.	USAF/ALC Depot OAP Evaluation Criteria	2-5
2-6.	Ferrography (Army)	2-5
2-7.	Ferrographic Evaluation of AH-1 helicopter Swashplate and Scissors and Sleeve Assembly	2-6
2-8.	Ferrography As a Supplemental Oil Analysis Process	2-7

LIST OF ILLUSTRATIONS

Number	Title	Page
A-1.	J52 FDA Flowchart	A-9
A-2.	Tail Rotor Gearbox	A-202
A-3.	Tail Rotor Gearbox Nomenclature	A-203
A-4.	Tail Rotor Gearbox, Tail Rotor Servo and Pitch Control Shaft Assembly	A-203
A-5.	Tail Rotor Gearbox VH-60N	A-252
A-6.	Tail Rotor Gearbox Nomenclature	A-253
A-7.	Tail Rotor Gearbox, Tail Rotor Servo and Pitch control shaft Assembly	A-253

LIST OF TABLES

Number	Title	Page
2-1.	Decision Making Guidance	2-8
2-2.	Laboratory Recommendation Codes (Aeronautical)	2-9
2-3.	USAF, ALC Depot OAP Evaluation Criteria	2-11
2-4.	USAF, ALC Depot Decision Logic Chart	2-12
A-1.	Corrective Action Codes	A-139
A-2.	Chip Evaluation Criteria	A-204
A-3.	Excessive Copper Wear	A-205
A-4.	Element Sources	A-206
A-5.	Wear Modes and Diagnostic Methods	A-207
A-6.	Copper Levels Between 100 and 200PPM	A-232
A-7.	Copper Levels Between 100 and 200PPM (Navy and Coast Guard)	A-239
A-8.	Chip Evaluation Criteria VH-60N	A-254
A-9.	Excessive Copper Wear VH-60N	A-255
A-10.	Element Sources VH-60N	A-256
A-11.	Wear Modes Diagnostic Methods	A-257

Appendices

Number	Title	Page
A	Aeronautical Criteria Tables and Supplemental Diagnostic Guidance	A-1
B	Current Service Equipment Not Enrolled in the Joint Oil Analysis Program	B-1

TECHNICAL PUBLICATION DEFICIENCY AND AFTO 22
REPORT INCORPORATION LIST

The following deficiency reports are incorporated as part of this change:

Originator	Report Control Number
Patuxent River MD	RCN 39783-04-0109
Patuxent River MD	RCN 39783-05-0067
Tinker AFB OK	AFTO 22 21MOCGBEAD702

THIS PAGE INTENTIONALLY LEFT BLANK

SECTION I

INTRODUCTION

1-1. PURPOSE. Volume III of the Joint Oil Analysis Program (JOAP) Manual presents the methodology for evaluating spectrometric analyses of samples from aeronautical equipment. The methodology enables an evaluator to identify wear metals present in the sample and their probable sources, to judge equipment condition, and to make recommendations which influence maintenance and operational decisions. Following these recommendations can enhance safety and equipment reliability and contribute to more effective and economic maintenance practices.

1-2. APPLICABILITY. The provisions of this manual apply to all activities of the Departments of the Army, Navy, and the Air Force participating in the JOAP and to laboratories operating under contract or mutual assistance agreements to provide Department of Defense JOAP support.

1-3. MANUAL CHANGE PROCEDURES. Detailed procedures for manual changes are contained in Volume 1.

THIS PAGE INTENTIONALLY LEFT BLANK

SECTION II

AERONAUTICAL EQUIPMENT

WEAR METAL ANALYTICAL METHODOLOGY

2-1. METHODOLOGY. The JOAP aeronautical wear-metal analytical methodology encompasses the interpretation of used oil sample analysis results, assessment of equipment condition based on the analysis results, diagnosis of the probable source (s) of the wear metal(s), and the issuance of accurate and effective equipment maintenance and/or operational recommendations to the operating activity. This methodology has the potential to standardize evaluator responses and to result in more accurate evaluation criteria and laboratory recommendations.

a. The aeronautical equipment wear-metal analytical methodology uses three separate but interrelated sets of tables:

(1) Wearmetal Evaluation Criteria Tables arranged by type equipment and end item (Appendix A). These tables provide wear-metal range and trend values which relate the oil sample wear-metal concentration to the expected condition of the equipment and/or the oil condition.

(2) Supplemental Diagnostic Guidance Tables (Appendix A). These tables provide addiitional wear-metal diagnostic guidance for each type of equipment being evaluated to assist in identifying the most probable failing part of the equipment (source of the wearmetal) when wearmetals are present, singly or in combinations, at other than normal concentrations in the sample or when an abnormal trend is evident. Boxes are placed around elements that will be the primary indicators of a particular failing component.

(3) Decision Making Guidance Table (Table 2-1) which provides guidelines for the evaluator concerning appropriate recommendations that should be issued after the sample is analyzed.

(4) Appendix B contains a list of current service equipment not enrolled in the JOAP program.

b. Normally, separate Evaluation Criteria and Diagnostic Guidance Tables are provided for each type of equipment but some tables are combined for different series engines on the same or similar end items. Separate tables are usually required because of differences in the normal sampling intervals, equipment operating characteristics, mission profiles and observed operating times required for wear-metal concentrations to progress from normal to abnormal. These characteristics were combined to produce data used to establish wear metal ranges and trends. When possible, information compiled from JOAP detected failures was used to establish the abnormal wear metal concentration. When this was not possible, the abnormal wear metal concentration was established using accepted statistical methods. The concentration ranges and trend values are continually analyzed and adjusted as required, using historical information, engineering reviews, and equipment teardown results. The sampling intervals, wearmetal range limits, and trend values were established to reduce the possibility that the wear-metal concentration may go from normal to abnormal without a sample being taken. The concept is one of increased surveillance by more frequent sampling as the wear concentrations increase. Information is provided on abnormal trend values because rapid metal-wear increases, even at low concentrations and within acceptable range limits, may be indicators of impending failure. Activities identifying a requirement to modify these tables for specific equipment should contact the cognizant engineering authority for the equipment involved.

c. If the necessity for making a maintenance recommendation is established, the Supplemental Diagnostic Guidance Tables may then be used to pinpoint possible problem areas and to help identify a specific recommendation. In many cases it is possible to give maintenance personnel an indication of what components in the equipment are wearing abnormally, based on the wear metals being produced.

d. The Decision Making Guide (Table 2-1) provides a logical sequence of action for the evaluator to follow in determining appropriate laboratory recommendations during the evaluation process. This table is structured so that a laboratory recommendation may be derived from a comparison of the latest oil sample analysis with the analysis of the previous sample with consideration of the trend as a factor. Table 2-1 is intended for use as a guide for the evaluator. When making a final determination of the appropriate recommendation, the evaluator must consider all the factors involved in the evaluation process. A recommendation for maintenance action is normally considered only after a special sample confirming the previous analysis. However, the evaluator may desire to issue a "do not fly, do not operate" recommendation following an abnormal routine sample pending an evaluation of the special sample if the circumstances warrant such a recommendation. The laboratory recommendation codes in Table 2-1 are defined in Table 2-2 and are standard throughout the JOAP for aeronautical equipment. A recommendation code that is the most appropriate for the situation shall be assigned. However, the descriptive text accompanying the recommendation code may be modified to fit the situation, provided the basic definition of the code selected remains unchanged.

e. Sampling frequency is directly related to the probability of detecting impending failure which is, in turn, related to the rapidity of the failure mode. Although oil analysis is intended to provide a high probability of detection of impending failure, a reduced probability of detection may be tolerated in some cases for equipment with built in redundancy such as multi-engined aircraft, or for systems with low safety risks associated with equipment malfunction or failure, such as aircraft auxiliary power units. Normal sampling frequency requirements, however, are determined by higher authority within each service, are mandatory, and are not subject to modification by laboratory or operating activities without official direction. Laboratories may, however, recommend increased sampling frequency for special samples when analysis results indicate the need for closer equipment monitoring on a temporary basis.

2-2. EVALUATING SAMPLE RESULTS. Fully automated laboratories will receive a computer generated recommendation based on limits entered in the computer program. Although these limits are statistically correct, the computer generated recommendation is considered as a guide and is not binding upon the evaluator. Evaluator experience and judgement are extremely important factors in determining an effective recommendation since the evaluator may use additional information not contained in the computer statistical program in order to arrive at a more accurate decision for a particular set of circumstances. The following procedure will be used by the evaluator in evaluating sample results:

NOTE

Investigate missing or unusual oil servicing records (such as no oil addition, or excessive oil addition) as these records are an important part of the sample evaluation process.

a. Determine the range for each critical wear metal concentration in the sample result from the appropriate engine/component wear metal Evaluation Criteria Table in Appendix A.. Critical wear metals (elements) which require oil analysis monitoring for the particular equipment have numerical criteria provided in the applicable equipment wear metal Evaluation Criteria Table. Data on the average concentration of other elements (listed below the table) are provided for information purposes. However, if unusual concentrations of these non-critical elements are found, they may also be used as a basis for maintenance recommendations or resampling requests.

b. Compare the wear metal concentration levels of the current sample with the levels of the previous sample to determine if changes are occurring which indicate developing or impending equipment problems.

c. Determine the wear metal trend between the last sample and the current sample and compare with the trend limit listed in the Evaluation Criteria Table. Most abnormal increases will usually be readily apparent. The trend limits in the tables are based on the wear metal concentration increase over a period of 10 equipment operating hours. Most intervals between samples will not be exactly 10 hours, therefore, a conversion must be made for approximate comparison purposes. A trend comparison may be made by dividing the wear metal increase between samples by the operating hours between samples and then multiplying the result by 10. For example: an increase of 2 ppm in 2 hours is roughly equivalent to a 10 ppm increase in 10 hours; and a 15 ppm increase over 25 hours is roughly equivalent to. a 6 ppm increase in 10 hours. Trend values for 10 hours are calculated as follows:

$$\frac{A - B}{C - D} \times 10 = \text{trend value for 10 hours}$$

A = ppm this sample
B = ppm last sample
C = operating hours this sample
D = operating hours last sample

NOTE

The formula shown above for calculating trends is a quick way to determine the trend values. However, trends calculated using this formula for samples taken very frequently (less than 5 operating hours between samples) may be much less accurate and reliable than trends calculated for samples taken less frequently (more than 5 hours between samples). This possibility of error is due to spectrometer allowable tolerances and also to the possibility of a variance in the rate of wear metal production over a period of time. The calculated trends will be very helpful information in the evaluation process, but if samples taken more frequently, such as after each flight, once each flying day, etc. are being evaluated, the calculated trends are not considered accurate for use as equipment acceptable/not acceptable criteria. If the Abnormal Trend is listed as an asterisk (*), the value is too low to be determined.

d. Trend values included in the Evaluation Criteria Tables are intended as guidelines for the evaluator. There are many other factors that must be evaluated to determine actual equipment condition and whether laboratory recommendations to the customer are required. Generally, trends will fall into one of the following categories:

(1) Level (little or no change): Considered normal.

(2) Slightly to moderately increasing or decreasing: usually considered normal because of spectrometer tolerances, sampling differences, and oil usage/addition factors.

(3) Sharply increasing or decreasing within trend limits: Usually indicative of problems. A sudden increase may indicate the start of an equipment problem, while a sudden decrease may indicate defective sampling procedures, oil addition or change without documentation, or sample identification problems. Recommend verification samples and/or decreased sampling interval for sharp increases, and investigate sampling procedures or undocumented oil addition for sharp decreases.

(4) Erratic increases and decreases of trend level: Usually indicates a problem in sampling procedure, (oil addition or change without documentation, sample identification, etc.), and should trigger a request to review activity sampling procedures and submit a monitored verification sample.

(5) Increases exceeding trend limits: Generally indicative of equipment problems. Consult Decision Making Guide and review equipment history. This normally results in a resample request and/or maintenance action recommendation.

NOTE

The above categories are subjective since no limiting increase or decrease point value within the trend limits may be assigned. Categorization of the severity of increases or decreases must be determined by each evaluator after considering all factors involved. The above listing is not considered complete but is provided to show that trend variances, even while still within limits, should be monitored to detect impending problems prior to development of component/system failures, whether action recommendations to operating activities are required or not.

e. Determine the appropriate recommendation using the Decision Making Guide. The majority of sample results will be normal, with the appropriate recommendation code of A If a recommendation for maintenance action is indicated by the Decision Making Guide, the Supplemental Diagnostic Guidance Table should be reviewed. These tables may provide additional maintenance information concerning likely problem areas that may warrant inclusion in the laboratory recommendation/ maintenance advisory notification to the operating activity.

f. The above procedure can serve as a step-by-step operational guide for evaluator personnel with limited experience, while retaining considerable flexibility for use by an experienced evaluator who can readily take into account the many factors which influence evaluations and recommendations. The judgement and experience of the evaluator are an important part of the evaluation process and should not be subordinated by numerical data when unusual circumstances exist. In many cases, the Decision Making Guide provides options concerning specific recommendations to be issued by the evaluator after considering all information, time since overhaul, time since oil change, past component history, critical element(s), etc. Normally these optional recommendation codes will be sufficient, but in some cases the evaluator may use recommendations not listed as applicable, based upon a thorough evaluation of the circumstances.

NOTE

The wear metal ranges and trend criteria shown in Appendix A are intended as guidelines to represent normal situations and average equipment oil system condition as related to a numerical value. There will always be exceptions to the average situation, and it is in these cases particularly that the evaluator's experience and judgement must be carefully applied. Some equipment may be candidates for removal before the guidelines are exceeded, such as those with rapid, sharp increases in wear metal levels still within guidelines but accompanied by reported equipment symptoms/malfunctions indicative of internal problems. Conversely, other equipment may be candidates for continued operation when analysis guidelines are exceeded, such as steady, slow, increases in concentration levels that eventually exceed guidelines listed, but are within normal trends and there are no other equipment operational data that indicates problems. However, in this situation the equipment would normally be sampled more frequently in order to minimize the possibility of missing an impending failure. Evaluators perceiving unusual situations such as these should contact the controlling/cognizant engineering authority for the specific equipment for guidance.

2-3. SPECIAL INSTRUCTIONS.

a. Constant Speed Drive Units. Constant Speed Drives (CSDs) are not field repairable and must be returned to depot for overhaul. Every precaution must be taken to assure that no serviceable CSDs are removed from service due solely to decisions resulting from high spectrometric wear metal indications. All physical and functional inspections authorized must be used in conjunction with JOAP spectrometric analysis to ascertain that the CSD in question is in fact malfunctioning or is producing visible gross metal to an extent beyond acceptable limits before removal from service is recommended.

b. Helicopter Gearboxes and Transmissions. Under certain conditions the provisions of Table 2-1, Decision Making Guidance, may not fully apply. Water in helicopter gearboxes and transmissions may cause high wear metal indications (normally either high iron and copper or high iron, copper, magnesium, and aluminum as a result of internal component corrosion. When high wear metal readings of these elements are obtained, the samples should be examined for water content. If high or abnormal wear metals are detected and/or the water content of the oil is excessive (normally over 1000 PPM or 0.10%), the laboratory recommendation should be to drain the gearbox/transmission (and flush if applicable), reservice with new oil, perform serviceability check in accordance with applicable maintenance manuals, and to submit special oil samples both after serviceability check and after a specified number of flight hours both wear metal and water content analysis. Detailed instructions for evaluating a particular gearbox/transmission are included in the applicable Supplemental Diagnostic Guidance Tables for the specific equipment.

2-4. ANALYZING ENGINE/TRANSMISSION TEST CELL RESULTS. The information contained in the tables of this manual are not fully applicable to equipment oil samples taken during test cell operational testing following equipment overhaul due to (1) the overhaul process itself and the different rate of wear metal production of newly overhauled engines and transmissions, (2) the brief duration of engine run time and the impossibility of correlating results with trend tables, and (3) the differences between type equipment oil supply during test cell operation (i.e., some engines, as configured for test cell operation, do not include a complete oil system and an external oil supply is required).

a. Certain similarities do exist in determining acceptable wear metal levels and production rates for both test cell and operational engines. Any engine/transmission that exceeds the normal wear metal limit specified in the applicable Evaluation Criteria tables of this manual should be examined to determine the source of the wear metal. However, wear metal levels within the normal range as specified in this manual may also be judged as excessive for test cell purposes at the discretion of the cognizant/controlling engineering authority for the particular equipment. Since the time between oil samples is normally too brief to be useable as a trend in accordance with the Evaluation Criteria Tables of this manual, acceptable and unacceptable trend limits shall be as established by the cognizant/controlling engineering authority for the equipment involved.

b. Engines/transmissions subjected to repair/minor repair in which the oil system remained intact and no repair was accomplished that would affect the oil system wear metal generating pattern, may be evaluated using the evaluation criteria of this manual despite the fact that trend values cannot normally be determined due to the brevity of the test cell operational run. Engines/transmissions in this category are normally subject to post repair ground run and test flight sampling, and evaluator judgement must again play a large part in determining equipment acceptability for continued operation until sufficient operation time is accumulated to establish a documented equipment trend.

c. Questions concerning equipment test cell wear metal limits and trends should be addressed directly to the cognizant/controlling engineering authority for the particular type/model/series equipment involved.

2-5. USAF/ALC DEPOT OAP EVALUATION CRITERIA**.** The USAF Depot OAP evaluation criteria contained in Table 2-3 are for ALC depot level use only. When the guidelines of Table 2-3 are exceeded, the Depot Decision Logic of Table 2-4 should be used.

2-6. FERROGRAPHY (ARMY). Ferrography is a fluid analysis technique that can be applied to the analysis of lubricating oils, hydraulic oils, and greases. Ferrography can be used not only to determine the size, shape, and type of wear metal particles being generated within a component, but also to determine the mode of wear (E.g., spalling, cuffing, and rubbing) producing the wear metal particles. Wear metal particles in the size range of 1 to 250 micrometers can be analyzed using Ferrography, which makes it an effective supplemental oil analysis procedure. The Ferrographic analysis of a lubricant sample is a three step process: (1) Processing the sample through the direct reading (DR) Ferrograph, (2) Processing the sample through the Analytical Ferrograph and preparing the Ferrogram, and (3) Examining the Ferrogram under the Ferroscope. All lubricant samples are mixed with a fixer solution, which aids in the flow of the sample across the substrate and in the development of the Ferrogram.

a. The DR Ferrograph is an instrument used to measure the concentration of wear metal particles and other debris in lubricants. The sample passes through a precipitator tube placed in a gradient magnetic field. The magnetic material contained in the sample is deposited in the tube and measured at two positions. The readings are indicated as D_S (small, 1 - 2 micrometers) and D_L (large, 5 micrometers or larger). This operation takes approximately 5 minutes and provides the information needed to determine if additional analysis is required. Criteria, with thresholds, are established for a component by evaluating numerous samplings of data over a period of time. If an established DR threshold is exceeded, the development of a ferrogram and its examination under the ferroscope is required. The DR ferrograph is not normally used in the analysis of grease samples.

b. The Analytical Ferrograph is used to prepare a Ferrogram. This procedure involves pumping a lubricant sample across a substrate which has a non-wetting barrier applied to one side. The slide is mounted at a slight angle above a magnetic field gradient. Gravitational pull causes the lubricant sample to flow across the slide, and the ferrous particles in the sample are deposited in strings along the surface of the substrate. The largest ferrous particles are deposited at the entry area of the barrier on the substrate. Nonferrous particles are usually contaminated with small amounts of ferrous materials and as a result are attracted to the substrate. Precipitation also causes nonferrous particles to be deposited on the slide. After the lubricant sample is pumped across the substrate, a fixer solution is used to clean the substrate and remove any residual lubricant. After the solution dries, the wear metal particles continue to adhere to the barrier area of the substrate even after being removed from the magnetic field. The Ferrogram is then analyzed under the ferroscope.

c. The Ferroscope is a bichromatic microscope with filters and a polarizer to direct both transmitted and reflected light onto the Ferrogram. The Ferroscope can be fitted with a Polaroid camera or a 35 millimeter camera to produce pictures of Ferrograms. It can also be fitted with a video monitor for remote viewing of the Ferrogram. When examined with bichromatic light under various magnifications, prepared Ferrograms disclose relevant information about the wear particles. By observing color and shape and by using various lighting and heating techniques, ferrous and many nonferrous materials can be identified and the mode of wear determined. In order to analyze the Ferrogram, the operator requires special training and experience. Once the evaluator is proficient in the operation of the Ferrograph system and proficient in evaluation procedures and techniques, he can readily determine the size, shape, type, and amount of wear material. Additional tests such as heat treating and chemical analysis can be conducted to further determine wear metal particle characteristics when viewed under the ferroscope.

d. Modified Ferrographic oil analysis procedures are used in the analysis of grease samples. The grease sample is diluted with 14 milliliters of fixer solution to break down the bonding material of the grease. The liquid is then allowed to flow across the substrate by utilizing gravitational flow.

NOTE

The peristaltic pump in the analytical Ferrograph is not used.

The substrate is elevated at the entry end to reduce the amount of initial magnetic attraction of the wear particles in the diluted grease and to increase the flow rate across the substrate. The magnetic field aligns the ferrous particles in strings along the slide and the fixer solution is passed across the substrate to remove the residual grease. After drying, the substrate is analyzed under the ferroscope. Evaluation baselines and criteria are developed for each type of component analyzed. Evaluation guideline criteria are provided to Army Oil Analysis Program (AOAP) laboratories in the form of color photographs of samples containing various amounts and types of wear particles. Grease sample Ferrograms are compared to these photographs and a subjective evaluation of the wear particle content of the ferrogram is made. A more detailed description of the evaluation process is contained in paragraph 2-7.

2-7. FERROGRAPHIC EVALUATION OF AH-1 HELICOPTER SWASHPLATE AND SCISSORS AND SLEEVE ASSEMBLY. The Ferrographic evaluation of the grease sample is accomplished by comparing the analytical Ferrogram with the evaluation guideline photographs furnished to each laboratory under separate cover. The DR Ferrograph is not used at this time.

a. Evaluation of the swashplate and scissors and sleeve assemblies can be easily accomplished at or near the entry area using 100x magnification. The most critical type of wear particles found in the evaluation of these components are caused by spalling (contact stress fatigue) formed from the bearing race and balls. In the swashplate, these particles average between 50 and 200 micrometers but can reach 500 micrometers. For the scissors and sleeve assemblies, these particles average between 50 and 150 micrometers, but can be as large as 350 micrometers. A large increase in size and quantity of the spalling particles from one sample to the next is the most dangerous wear situation. A maintenance action may be necessary when the abnormal level of spalling wear (photograph 4) is reached.

b. Rubbing wear is caused by the bearing spinning or fretting and can be very dense in both the swashplate and scissors and sleeve grease samples. Increases in rubbing wear can be tolerated as long as the spalling particles do not increase in size and quantity. An example of this is found in photograph 8. The amount of spalling, marginal to high, makes this a more critical wear situation than that found in photograph 9, which shows abnormal rubbing wear. A removal recommendation could be based on abnormal rubbing wear, but generally the component should be closely monitored for a period of time rather than recommending immediate removal.

c. It is not unusual to see some cuffing wear in both the swashplate and the scissors and sleeve assemblies. However, an abnormal amount as shown in photograph 10, is cause for a maintenance recommendation.

d. For determining the presence of any nonferrous wear, evaluation will need to be accomplished at or near the 30mm - 10 mm (exit) area of the Ferrogram. It is unusual to see nonferrous wear in a swashplate grease sample; however, there have been instances where aluminum has been found (photograph 11). Most of the time the aluminum originates from the shims or retainer plate. The type of nonferrous wear that occurs most often in the scissors and sleeve samples is produced as brass chunks that can average from 30 to 100 micrometers in size. The brass wear originates from the bearing cages and caution should be exercised if the size and quantity of brass wear increases significantly from one sample to the next.

2-8. FERROGRAPHY AS A SUPPLEMENTAL OIL ANALYSIS PROCESS. Ferrography is routinely used as a supplemental oil analysis process by AOAP laboratories for analyzing suspect aeronautical oil samples. Suspect oil samples are defined as those for which one or more of the following diagnostic indicators are observed: chip light; vibration; metal on screens or filters; oil of unusual color, odor, or high solids content; and oil samples having abnormal spectrometric trends or wear-metal content. Ferrography is not a substitute for spectrometric analysis, but rather a supplemental analytical tool used to provide additional information in the diagnostic process.

a. The three-step process outlined in paragraph 2-6 is utilized in the ferrogrophic analysis and evaluation of suspect oil samples. In this process, the direct reading (DR) Ferrograph serves as a screening device to determine whether or not a complete ferrographic analysis is necessary.

b. DR Ferrograph evaluation guidelines for selected aeronautical components are contained in. Components having high DR readings or ratios should be monitored closely. When established guidelines are exceeded, the development of a Ferrogram and its examination under the Ferroscope is required.

c. Recommendations which could lead to the removal of a component from service, will not be made on the basis of DR analysis alone. A complete Ferrographic analysis should be performed as a final check before a recommendation leading to the removal of a component from service is made. This will enhance the laboratory's ability to pinpoint potential failures as well as help to eliminate the unnecessary removal and teardown of serviceable components.

TABLE 2-1

DECISION MAKING GUIDANCE

			RECOMMENDATIONS	
RANGE THIS SAMPLE	RANGE PREVIOUS SAMPLE	TREND	CATEGORY I	CATEGORY II
NORMAL		Normal	routine	N/A
	Normal	Abnormal	resample or surveillance required	surveillance required
	Marginal	N/A	routine or resample required	surveillance X 2 required
	High	N/A	routine or resample required	surveillance X 2 required
	Abnormal	N/A	routine or resample required	surveillance X 2 required
MARGINAL		Normal	routine or resample required	surveillance required
	Normal	Abnormal	resample required	surveillance required
		Normal	routine	N/A
	Marginal	Abnormal	resample required	surveillance required
	High	N/A	routine or resample required	surveillance X 2 required
	Abnormal	N/A	routine or resample required	surveillance X 2 required
HIGH		Normal	resample required	surveillance required
	Normal	Abnormal	resample required	resample or inspection
		Normal	surveillance required	surveillance required
	Marginal	Abnormal	resample required	resample or inspection
		Normal	surveillance required	surveillance required
	High	Abnormal	resample required	resample or inspection
	Abnormal	N/A	resample or surveillance required	surveillance X 2 required
ABNORMAL		Normal	resample required	surveillance required
	Normal	Abnormal	resample required	resample or inspection
		Normal	surveillance required	surveillance required
	Marginal	Abnormal	resample required	resample or inspection
		Normal	surveillance required	surveillance required
	High	Abnormal	resample required	resample or inspection
		Normal	resample required	resample or inspection
	Abnormal	Abnormal	inspection required	inspection required
Routine samples: A				
Resample required: B, F, P - use most applicable				
Surveillance required: C, E - use most applicable				
Inspection required: H, R, T - use most applicable				
Self-explanatory: G, J, Q,W, Z				
NOTE: Two C codes should follow a J code to establish a new baseline.				
For all routine samples, recommendation in the Category I column will be used. For all laboratory requested special/verification samples, recommendation in Category II will be used.				

TABLE 2-2. STANDARD LAB RECOMMENDATION CODES - AERONAUTICAL

FOR SPECTROMETRIC ANALYSIS

CODE	GENERAL LAB RECOMMENDATIONS
A	Sample results normal, continue routine sampling.
X	Analysis results supplied to customer; no recommendation required.
Z	Previous recommendation still applies.

CODE	INSPECTION RECOMMENDATIONS (Requires Feedback)
H**	Inspect unit and advise lab of finding. Abnormal wear indicated by _____ ppm (element).
R**	Do not fly or operate; inspect filters, screens, chip detector and sumps; advise laboratory of results.
T**	Do not fly or operate. Examine for discrepancy and advise laboratory of results and disposition. If discrepancy found and corrected, continue operation and submit resample after *** hours of operation. If discrepancy is not found, recommend remove component from service and send to maintenance.

CODE	OIL CHANGE RECOMMENDATIONS (Requires Resample)
J	Contamination confirmed. Change oil, sample after *** minute run-up and after *** operating hours.

NOTE

Contamination is defined as water, coolant, silicon, etc, and not wear-metals. Use the appropriate recommendation codes for increasing trends or elevated wear-metal conditions.

W	Contamination suspected. Change oil; run for *** additional hours, take samples hourly. (This code for Air Force ALC Depot use only.)

TABLE 2-2. STANDARD LAB RECOMMENDATION CODES - AERONAUTICAL

FOR SPECTROMETRIC ANALYSIS (Cont)

CODE	LAB REQUESTED RESAMPLES (Requires Resample)
B*	Resample ASAP, do not change oil.
C*	Resample after *** hours, do not change oil.
E*	Do not change oil. Restrict operations to local flights or reduced load operation, maintain close surveillance and submit check samples after each flight or *** operating hours until further notice.
F*	Do not change oil. Submit resample after ground or test run. Do not operate until after receipt of laboratory results or advice.
G*	Contamination suspected, do not change oil, resample unit and submit sample from new oil servicing this unit..
P*	Do not fly or operate; do not change oil; submit resample ASAP.
Q*	Normal PPM reading was obtained from test cell run after complete P.E. where oil lubricated parts were changed/removed/replaced. Monitor engine closely after installation to ensure a normal trend before release to routine sampling.

NOTE: * Resample (red cap) required
** Maintenance feedback required; advise laboratory of findings
*** Laboratory will specify time limit

TABLE 2-3. AIR FORCE LOGISTICS CENTER DEPOT OAP EVALUATION CRITERIA

(Follow ALC Depot Decision Logic When Guidance Are Exceeded.)

JOAP ATOMIC EMISSION	Fe	Ag	Al	Cr	Cu	Mg	Ni	Si	Ti
J33	16	4	4	4	5	6	-	-	-
J57-13/21/23	11	3	5	3	3	5	3	-	3
J57-19/29	11	3	5	3	3	5	3	-	3
J57-43/55/59	11	3	5	3	3	5	3	-	3
J75	9	3	4	4	2	4	-	-	2
J79	19	3	3	5	3	7	3	-	3
F100	5	2	2	2	3	3	2	15	3
TF30-P3/7/9	7	2	2	4	3	4	3	-	3
TF30-P100	7	2	2	4	2	4	2	-	3
TF33-P3/5/9/11A	10	3	5	5	3	5	3	-	3
TF33-P7/7A/100A	10	3	5	5	3	5	3	-	3
TF39	9	3	2	2	5	6	3	25	3
TF41-A-1	12	3	3	4	8	4	3	-	3
TF41-A-2	12	3	3	4	5	4	3	-	3
T56-7/9/15 (1)	2	1	1	1	1	2	1	5	12
G56-7/9/15 (1)	2	1	1	1	1	2	1	4	1
T58-3/5	21	4	6	4	6	7	-	-	-
T64	12	3	6	4	5	5	-	-	-
GTC85-70	10	2	3	2	6	5	3	25	5
GTC85-71	8	1	3	2	6	4	3	25	3
GTCP85-108	5	2	2	2	6	2	2	25	2
GTCP85-180	10	3	4	3	6	3	3	25	-
GTCP85-397	12	3	3	2	8	4	4	25	4
GTCP165-1	6	2	2	2	3	4	3	25	-
T41M-9	50	1	5	4	6	6	2	25	3

(1) Use difference between preliminary sample and acceptance sample. Change oil when Si level exceed 20 ppm.

TABLE 2-4. AIR FORCE ALC DEPOT DECISION LOGIC

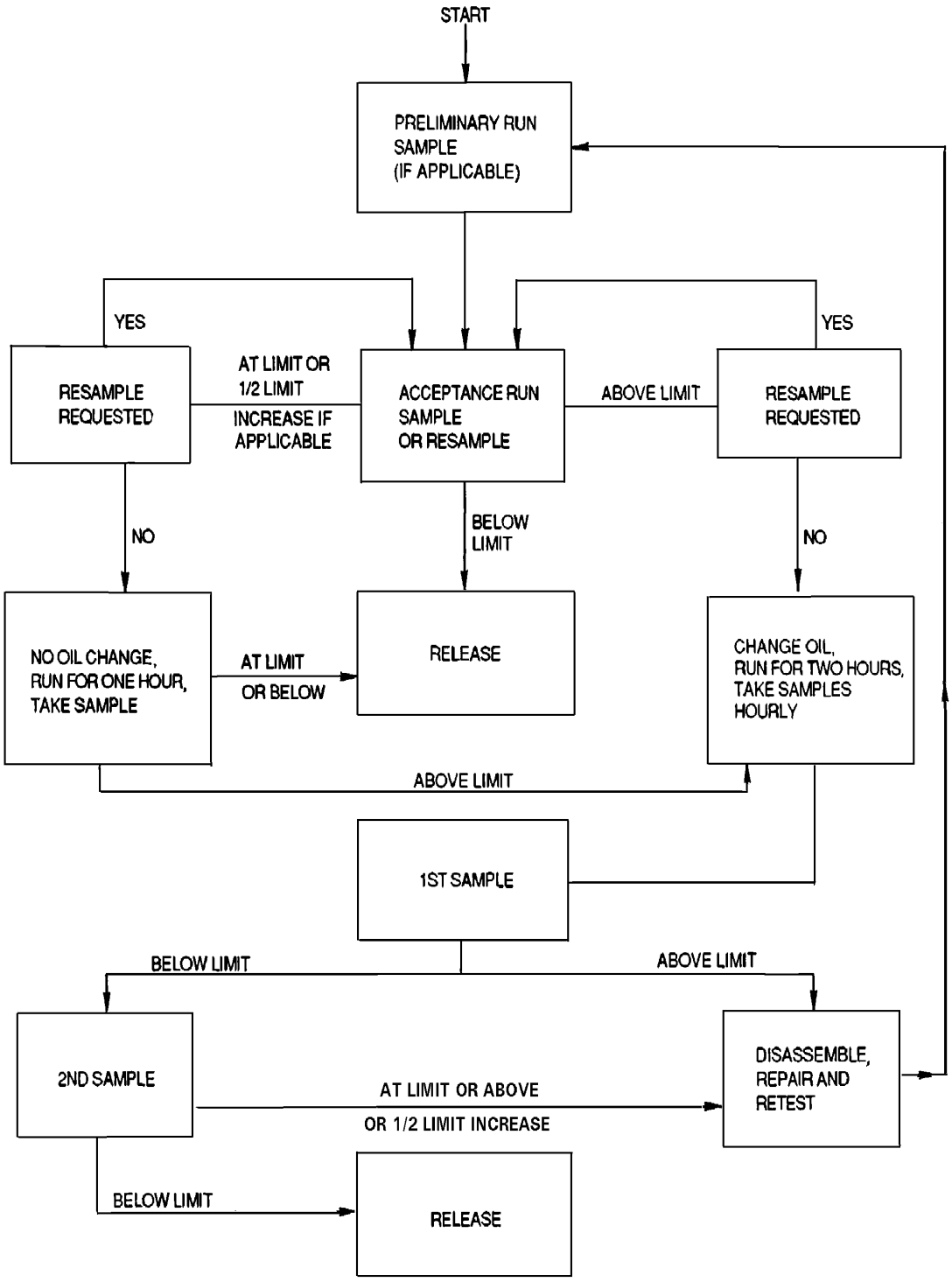

*DO NOT CHANGE OIL FOR T56 OR G56 AT ALC UNLESS REQUIRED

APPENDIX A

AERONAUTICAL EQUIPMENT CRITERIA TABLES AND SUPPLEMENTAL DIAGNOSTIC GUIDANCE TABLES

AIRCRAFT ENGINES

TURBOJET

Engine	Aircraft	Page
J52-P-8B/-8C/-408/-408A/-408B (NAVY)	A-4, EA-6B	A-7
J57-P-19/-29/-43/-59	B-52, C-135	A-10
J60-P-3/-5 (AIR FORCE)	T-39	A-12
J60-P-3/-6, JT12A (NAVY)	T-2B, T-39D, CT-39D, CT-39G	A-14
J69-T-25/-25A	T-37	A-16
J75-P-13/-17/-19	U-2	A-18
J79-GE-8/-10/-15/-17	F-4	A-20
J85-GE-4A	T-2C	A-23
J85-GE-5/-13	T-38, F-5	A-25
J85-GE-21/-21B/-21C (NAVY)	F-5E/F	A-28

TURBOPROP and TURBOSHAFT

Engine	Aircraft	Page
PT-6A-25 (NAVY)	T-34C	A-31
PT-6A-34B	T-44A	A-32
PT6A-68	T-6A	A-33
T53-L-13B, T53-L-703 (AIR FORCE)	UH-1H, TH-1H	A-35
T53-L-11/-13/-13B (ARMY)	(H -1) (ALL SERIES)	A-36
T55-L-712	CH-47D/F, MH-47E/G	A-38
T56-A- (ALL SERIES)	C-130, E-2C, E-2C+, C-2, P-3	A-39
T58-GE-3/-8/-10	H-1	A-41
T58-GE-16/-400B/-402	H-3, H-46	A-43
T63-A-/700/-720 (ARMY)	OH-58A/C	A-45
T64-GE-100/-413/-416/-416/-416A/A+/-419	CH-53D/E, MH-53E	A-46
T64-P4D	C-27	A-48
T74-CP-702 (PT6-A-20/27/28/29/41/-50)	C-12/C/D, UV-18, SDS-30	A-49
LTS101-750A-1/B-2	HH-65A	A-50
T400-CP-400/-401, T400-WV-402 (NAVY)	AH-1J, UH-1N, AH-1T, VH-1N	A-52
T400-CP-400 (AIR FORCE)	UH-1N	A-54
MK529-8X (NASA)	G-159	A-56
AE2100D3 (NAVY AND MARINES)	KC-130J	A-57
AE1107C	MV-22, CV-22	A-58

TURBOFAN and AUGMENTED TURBOFAN

Engine	Aircraft	Page
TF30-P-414A (NAVY)	F-14A	A-59
TF33-P-3/-103, TF33-P11A (WP-57F) NASA	B-52	A-61
TF33-PW-102, JT3D-3B	C-18, C-135, C-137, E-8	A-63
TF33-P-5/-9	C-135	A-65
TF33-P-7	C-141	A-68
TF33-P-100	E-3A	A-70
TF34-GE-100A (AIR FORCE)	A-10	A-72
TF34-GE- 400B (NAVY)	S-3B	A-75
TF39-GE-1C	C-5	A-78
TF41-A-2/-2A/-2B/-2C -400/-402C/-402D (NAVY)	A-7A/-7E/-7F/-7H, EA-7L, TA-7C	A-81
JT8D-9A (AIR FORCE)	VC-9C, C-9A, T-43A, C-22A/B	A-83
JT8D-9A (NAVY)	C-9B, DC-9	A-85
F100-PW-100/-200/-220/-229	F-15, F-16	A-88
F101-GE-102	B-1B	A-92
F108-CF-100GE	KC-135R	A-95
F110-GE-100	F-16	A-97
F110-GE-129	F-16	A-102
F110-GE-400	F-14B, F-14D	A-106
F118-GE-100	B-2	A-109
F118-GE-101	U2S	A-112
F119-PW-100A	F-22	A-116
F402-RR-406B/-408A/-408B (MARINES)	TAV-8B/AV-8B	A-121
F404-GE-400/402 (NAVY)	F/A-18A/B/C/D	A-122
CFM56-2A-2	E-6A	A-123
CF6-50	E-4B	A-125
F404-GE-F1D2 (AIR FORCE)	F-117A	A-127
JT15D-5B (AIR FORCE)	T-1A	A-129

OPPOSED

Engine	Aircraft	Page
IO-360-C/D	O-2, O-3	A-132
IO/O-470 (All series)	T-34, O-1, U-18	A-134
O-470-4 (NAVY)	T-34B	A-136
O-480	U-4	A-138

UNMANNED SYSTEMS

Engine	Aircraft	Page
Hunter Heavy Fueled Engine (HFE)	Unmanned Aerial Vehicles (UAV)	A-139

GEARBOXES and TRANSMISSIONS

Aircraft	Equipment	Page
AH-1W, HH-1N, UH-1N (NAVY)	Main Gearbox	A-140
	42˚ Intermediate Gearbox	A-141
	90˚ Tail Rotor Gearbox	A-142
UH-1N (NAVY)	T400 Combining Gearbox	A-143
H1 (ALL SERIES) (ARMY AND AIR FORCE)	Transmission	A-144
	42˚ Intermediate Gearbox	A-145
	90˚ Tail Rotor Gearbox	A-146
SH-2G (NAVY)	Main Gearbox	A-147
	Intermediate Gearbox	A-149
	Tail Rotor Gearbox	A-151
	Combining Gearbox	A-153
H-3 (NAVY)	Transmission	A-155
	42˚ Intermediate Gearbox	A-157
	Tail Rotor Gearbox	A-159
H-3, VH-3D	Main Transmission	A-161
	42˚ Intermediate Gearbox	A-163
	Tail Rotor Gearbox	A-165
MH-6H, MH-6J, MH-6M, MH-6N, AH-6M	Main Transmission	A-167
	90˚ Tail Rotor Gearbox	A-168
CH-34C	Transmission	A-169
	Intermediate Transmission	A-170
	Tail Rotor Gearbox	A-171
H-43	Transmission	A-172
H-46 (NAVY)	Fwd Gearbox	A-173
	Aft Gearbox	A-174
CH-47D/F, MH-47E/G	Engine Mechanical Transmission	A-175
	Combining Transmission	A-176
	Forward Transmission	A-177
	Aft Transmission	A-178
HH-52 (NAVY AND COAST GUARD)	Main Transmission	A-179
	Intermediate Gearbox	A-180
	Tail Rotor Gearbox	A-181

GEARBOXES and TRANSMISSIONS (Cont.)

Aircraft	Equipment	Page
H-53 (NAVY)	Main Gearbox	A-182
	Intermediate Gearbox	A-184
	Accessory Gearbox	A-186
	Nose Gearbox	A-188
	Tail Rotor Gearbox	A-190
H-53 (AIR FORCE)	Transmission	A-192
H-57 (NAVY)	Main Gearbox	A-193
	Tail Rotor Gearbox	A-194
OH-58A/C	Transmission	A-195
	90º Tail Rotor Gearbox	A-196
UH-60A, EH-60A, HH-60A (ARMY)	Main Transmission	A-197
UH-60L, UH-60M, EH-60L, HH-60L, MH-60L, MH-60K, MH-60M (ARMY)	Main Transmission (3 micron filter)	A-199
UH-60A, UH-60L, UH-60M, EH-60A, EH-60L, HH-60A, HH-60L, MH-60K, MH-60L, MH-60M , BLACK HAWK, (ARMY)	Tail Rotor Gearbox	A-200
	Intermediate Gearbox	A-211
SH-60B, SH-60F, HH-60H, MH-60R, MH-60S, VH-60N	Main Transmission	A-215
SH-60B, SH-60F, HH-60H, MH-60R, MH-60S, SH60-R, YSH-60J, NMH-60R, NSH-60B, HH-60J, MH-60J, MH-60T (NAVY AND COAST GUARD)	Main Transmission	A-216
SH-60B, SH-60F, HH-60H, UH-60A, UH-60L, EH-60A, MH-60L, MH-60K, MH-60R, MH-60S, VH-60N	Intermediate Gearbox	A-217
SH-60B, SH-60F, HH-60H, MH-60R, MH-60S, SH-60R, YSH-60J, NMH-60R, NSH-60B, HH-60J, MH-60J, MH-60T (NAVY AND COAST GUARD)	Intermediate Gearbox	A-222
SH-60B, SH-60F, HH-60H, MH-60R, MH-60S	Tail Rotor Gearbox	A-227
SH-60B, SH-60F, HH-60H, MH-60R, MH-60S, SH-60R, YSH-60J, NMH-60R, NSH-60B, HH-60J, MH-60J, MH-60T (NAVY AND COAST GUARD)	Tail Rotor Gearbox	A-234

GEARBOXES and TRANSMISSIONS (Cont.)

Aircraft	Equipment	Page
HH-65A	Main Gearbox	A-240
	Tail Rotor Gearbox	A-241
T-38 (NAVY)	Gearbox	A-242
PTG14/30/31 (NASA)	Gearbox	A-243
MV22 CV22	Gearbox Systems	A-244
VH-60N	Main Transmission	A-245
	Intermediate Gearbox	A-246
	Tail Gearbox	A-250

AUXILIARY and GROUND POWER UNITS

Aircraft	Equipment	Page
A-10	GTCP36-50	A-260
C-27	GTCP36-16A	A-262
C-2, F-18 (NAVY)	GTCP36-200/201C	A-263
S-3A/B (NAVY)	GTCP36-201A	A-265
C-5	GTCP165-1	A-266
C-9 (AIR FORCE)	GTCP85-98 / TE-8A	A-267
C-130	GTC85-71	A-268
C-141	GTCP85-106	A-270
CH-46A/D/F, NCH-46A, UH-46A (NAVY)	T62T-11	A-272
P-3 (NAVY)	GTCP95-2/-3	A-273
H-53	T62T-27	A-274
VH-60N	T62T-40-1	A-275
Other Equipment	GTC85 (NAVY)	A-276
	GTCP85-180 (M32A-60A)	A-277
	GTCP85-397 (M32A-60)	A-278
	GTCP100 (NAVY)	A-280
	T62T-32 (EMU-30)	A-281

CONSTANT SPEED DRIVES

Aircraft	Page
A-4F/M CSD (NAVY)	A-283
EA-6B CSD (NAVY)	A-284
AV-8A, TAV-8A Integrated Drive (NAVY)	A-285
F-14 CSD (NAVY)	A-286
S-3 Integrated Drive Generator (NAVY)	A-287

HYDRAULIC SYSTEMS

Aircraft	Page
H-1 (ALL SERIES) (ARMY AND AIR FORCE)	A-285
CH-47, MH-47 (ALL SERIES)	A-286
OH-58A/C	A-290

ARMY AERONAUTICAL END ITEM TO ENGINE CROSS REFERENCE INDEX

End Item	Component	Page
C-12C/D	Engine - PT6A-41, T74-CP-702	A-49
CH-47D/F, MH-47E/G	Engine - T55-L-712	A-38
H-1	Engine -T53-L-13	A-36
H-1	Hydraulic System	A-288
SDS-30	Engine - PT6A-50, T74-CP-702	A-49
UH-60A, EH-60A, HH-60A	Transmission	A-197
UV-18	Engine - PT6A-27	A-49

ENGINE: J52-P-8B/-8C/-408/-408A/-408B (NAVY)
AIRCRAFT: (A-4) (EA-6B)

JOAP ATOMIC EMISSION ROTRODE

	Fe	Ag	Al	Cr	Cu	Mg	Ti	Si	Mo	B	Zn
Abnormal Trend (PPM Increase in 10 hrs)	3	1	2	1	2	2	2	5	1		
Normal Range	0-5	0	0-2	0-1	0	0	0-1	0-10	0-1		
Marginal Range	6-8	*	3-4	*	1	1	2-3	11-12	*		
High Range	9-11	*	5-6	*	2	2	4-5	13-14	*		
Abnormal	≥12	≥1	≥7	≥2	≥3	≥3	≥6	≥15	≥2	10	10

Fe	Nos. 1, 4½, 5, and 6 roller bearing and races Nos. 2, 3, and 4 ball bearing and races Gearbox gears Front and main accessory drive gears
Fe Al	Front accessory drive, No. 6 and main gearbox oil pumps
Fe Ag Cu &	Front accessory bearing cages
Si Sn	Nos. 4 and 5 scavenge pump bearing cages No. 6 bearing cages
Mg	Main accessory drive housing Main gearbox
Cu & Al Fe	Main oil pump bushings
Ti & Fe	Nos. 1 and 3 bearing hubs

Elevated boron (B) and/or zinc (Zn) concentrations usually indicate contamination with another oil type, primarily MIL-PRF-2104. Recommend resampling and retesting immediately. If new value exceeds 8.0 PPM, run check with D19-0 to ensure proper instrument function. When proper function is confirmed, report both results and suspected contamination with MIL-PRF-2104 to chain of command, maintenance chief, cognizant engineering authority (Army and Navy only), and other personnel as specified by local written procedures. Recommend flushing and retesting of contaminated pre-oilers, carts, or other reservoirs where contamination is found until both B and Zn concentrations fall below 8.0 PPM. Refer to JOAP Manual Volume II Section IX, page 9-1 for more information. Recommend segregation of confirmed or suspected contaminated stocks, and submit information (batch no., lot no., MIL-PRF, nature of problem, etc.) on such stocks through the Defense supply deficiency reporting system.

ENGINE: J52-P-8B/-8C/-408/-408A/-408B (NAVY) (Cont.)
AIRCRAFT: (A-4) (EA-6B)

J-52 engines may not be operated until spectrometric oil analysis results have been received by the customer; therefore all J-52 samples shall be processed by the JOAP laboratory immediately upon receipt and before other samples previously received. Laboratory personnel shall immediately transmit results to the customer. Laboratory personnel shall log all phone calls, facsimiles and e-mails concerning transmission of results including time of sample receipt, time of results transmission, method of transmission and the name of the point of contact at the customer activity. Refer to the decision making flowchart on page A-9.

1. If the FE is at or exceeds the abnormal limit, issue advice code T, do not fly or operate, recommend engine removal.

2. If the Fe trend and the Ag trend is at or exceeds the abnormal trend limit, issue advice code T, do not fly or operate, recommend engine removal.

3. If the Fe is in the high range or the trend for Fe meets or exceeds the table limit, recommendation shall be code R, do not fly or operate, inspect filter using FDA. If the FDA inspection meets grounding criteria, assign code T, do not fly or operate, recommend engine removal. If the FDA inspection does not meet grounding criteria, place filter on a 25 hour cycle, place JOAP oil sampling on a 5 hour interval until results return to normal.

4. If Cr and/or Mo are abnormal and the Fe is in the normal range, recommend code C, resample after 5 hours, do not change oil. If the resample is abnormal, assign code T, do not fly or operate, recommend engine removal.

5. If Ag is abnormal, recommend code R, do not fly or operate, inspect filter using FDA. If the FDA inspection meets grounding criteria, assign code T, do not fly or operate, recommend engine removal. If the FDA inspection does not meet grounding criteria, place filter on a 25 hour cycle, place JOAP oil sampling on a 5 hour interval until results return to normal.

6. IF Si is abnormal, recommend code J, contamination confirmed, change oil, resample with normal sampling schedule.

NOTES

Increasing trend in Al - inspect gearbox main oil filter and main oil pump housing for scoring.

All bearing journals except titanium may be chrome plated during overhaul.

Oil pump gear journals may be chrome plated during overhaul.

Figure A-1. J52 FDA Flowchart

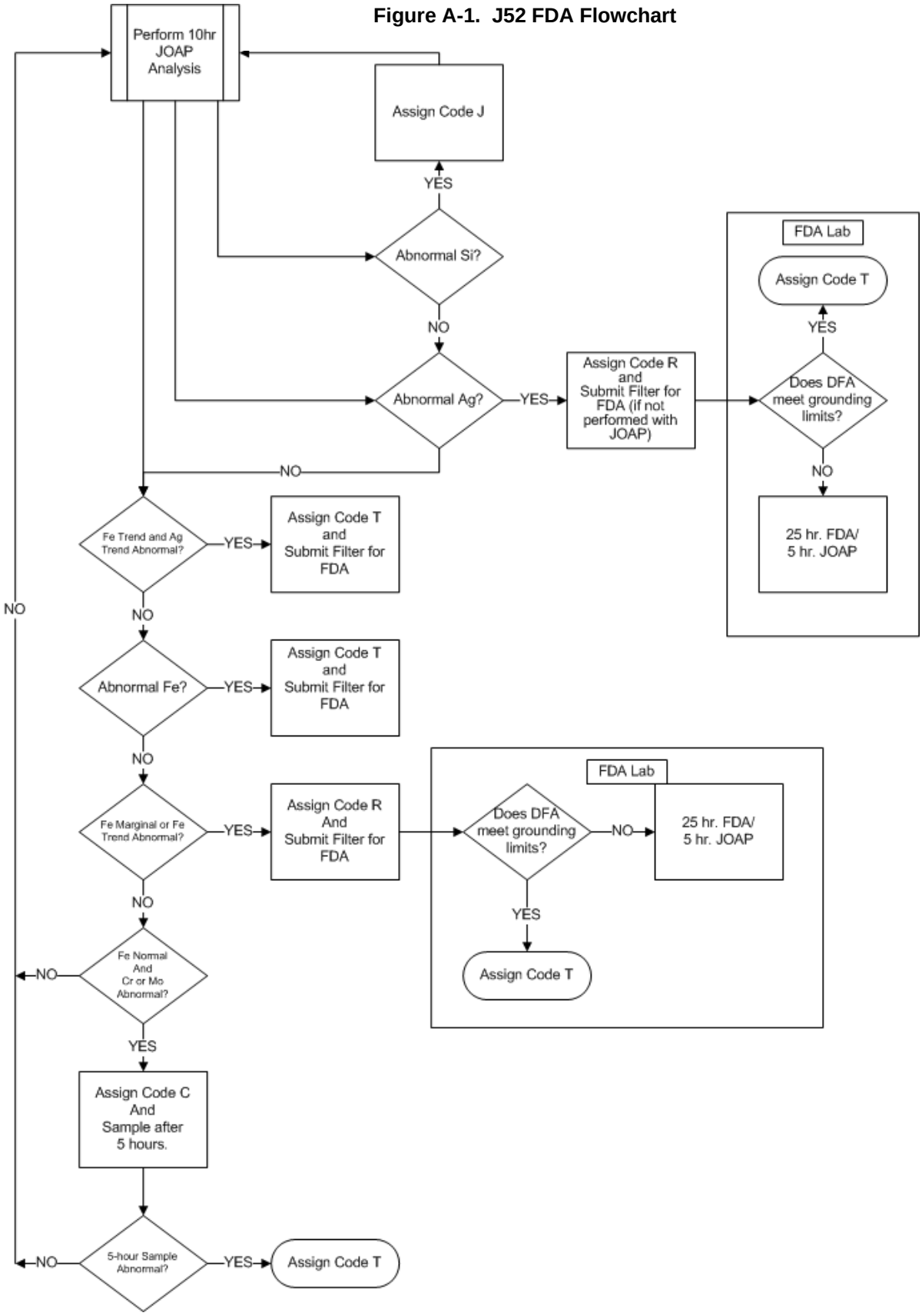

ENGINE: J57-P-19/-29/-43/-59
AIRCRAFT: (B-52/C-135)

JOAP ATOMIC EMMISION ROTRODE

	Fe	Ag	Al	Cr	Cu	Mg	Ni	Ti	B	Si	Zn
[1]Abnormal Trend (PPM Increase in 10 hrs)	9	2	3	3	3	4		4			
Normal Range	0-6	0	0-2	0	0-1	0-2		0-1			
Marginal Range	7-10	1	3	1	2	3-4		2-3			
High Range	11-16	2	4	2	3	5		4			
Abnormal	≥17	≥3	≥5	≥3	≥4	≥6		≥5	10	10	10

[1]If the calculated PPM trend value is equal to or greater than the trend PPM value limit, the engine has an abnormal trend.

Elevated boron (B) and/or zinc (Zn) concentrations usually indicate contamination with another oil type, primarily MIL-PRF-2104. Recommend resampling and retesting immediately. If new value exceeds 8.0 PPM, run check with D19-0 to ensure proper instrument function. When proper function is confirmed, report both results and suspected contamination with MIL-PRF-2104 to chain of command, maintenance chief, cognizant engineering authority (Army and Navy only), and other personnel as specified by local written procedures. Recommend flushing and retesting of contaminated pre-oilers, carts, or other reservoirs where contamination is found until both B and Zn concentrations fall below 8.0 PPM. Refer to JOAP Manual Volume II Section IX, page 9-1 for more information. Recommend segregation of confirmed or suspected contaminated stocks, and submit information (batch no., lot no., MIL-PRF, nature of problem, etc.) on such stocks through the Defense supply deficiency reporting system.

Elevated silicon (Si) concentration usually indicates contamination with soil, sand, or dust. If aluminum (Al) is also elevated, this suggests the presence of clay or soil. Recommend resampling and retesting immediately. If new value exceeds 8.0 PPM, run check with D19-0 to ensure proper instrument function. When proper function is confirmed, report both results and suspected contamination with soil, sand, or dust to chain of command, maintenance chief, cognizant engineering authority (Army and Navy only), and other personnel as specified by local written procedures. Recommend flushing and retesting of contaminated pre-oilers, carts, or other reservoirs where contamination is found until silicon concentration falls below 8.0 PPM. Refer to JOAP Manual Volume II Section IX, page 9-1 for more information. Recommend segregation of confirmed or suspected contaminated stocks, and submit information (batch no., lot no., MIL-PRF, nature of problem, etc.) on such stocks through the Defense supply deficiency reporting system.

Cu is the most significant and critical wear metal. When Cu is detected by itself in any amount, maintain close surveillance. Increasing trends in Cu are usually indicative of problem in the Nos. 2, 4, and/or No. 5 bearing. In cases of advanced wear, Cu may be accompanied by increases in Fe. Whenever Fe increases in combination with an increase in Cu, for J57-43/59 engines, first remove the angle drive and inspect the top roller bearing for cage separation, then for all engines, inspect for excessive Nos. 2, 4 and/or 5 bearing wear. Ag may also be detected in advance bearing wear. Increases in Mg usually indicate discrepancy in accessory gearbox (OPAH). When Mg is accompanied by an increase in Fe, the discrepancy is usually in the OPAH bearing area.

ENGINE: J57-P-19/-29/-43/-59 (Cont.)
AIRCRAFT: (B-52/C-135)

When Al increases to abnormal value or is accompanied by a small increase in Fe and, sometimes, Cu, the discrepancy is usually with the main lube pump or scavenge pump. Increases in Cr indicate excessive wear or failure of carbon seal. Increase in Ti indicates Nos. 1, 2, 2½, and/or No. 3 bearing hub wear in J57-43 engine. Increase in Al by itself to abnormal values may indicate a discrepancy in the angle drive coupling. Recommend an inspection to determine whether the angle drive coupling snap ring is out of place or bent in a manner to result in coupling rubbing. Although Pb is not a critical element it may be found in relatively high levels. If Pb only is high and other critical elements, i.e., iron, cooper, etc., are well within limits and Pb exceeds 50 PPM, recommend engine be placed on code "J" (drain and flush). If the Pb levels drop below 50 PPM after the first flight, place the engine on routine sampling intervals.

Ti	Nos. 1, 2, 2½ and/or No. 3 bearing hubs (applicable to -43)
Fe	Main bearing balls/rollers, races and seals Gearbox gears
Fe Al	No. 6 scavenge oil pump (applicable to -43) Gearbox oil pump (applicable to -19/-59)
Fe Al Ag Cu & Si Sn	Nos.4, 4½ and 5 scavenge oil pump
Fe Ag	Nos. 2½ and 3 bearing cages (2½ bearing applicable to -43)
Fe Ag Cu	Gearbox governor and tach drive bearings
Fe Ag Cu & Si Sn	Gearbox bearing
Fe Mg	No. 6 scavenge oil pump (applicable to -19)
Ag Cu & Si Sn	Nos. 1, 2, 4, 4½, 5 and 6 bearing cages
Al Mg	Gearbox housing and adapter

NOTES

All bearing journals, except those that are titanium, may be chrome plated during rework.

ENGINE: J60-P-3/-5 (AIR FORCE)
AIRCRAFT: (T-39)

JOAP ATOMIC EMISSION ROTRODE

	Fe	Ag	Al	Cr	Cu	Mg	Ni	Ti	B	Si	Zn
[1]Abnormal Trend (PPM Increase in 10 hrs)	7	3	3	3	4	5		3			
Normal Range	0-14	0-1	0-3	0-4	0-4	0-10		0-5			
Marginal Range	15-21	2-7	4-6	5-7	5-7	11-15		6-7			
High Range	22-34	8	7-11	8	8-14	16-24		8-9			
Abnormal	≥35	≥9	≥12	≥9	≥15	≥25		≥10	10	10	10

[1]If the calculated PPM trend value is equal to or greater than the trend PPM value limit, the engine has an abnormal trend.

Elevated boron (B) and/or zinc (Zn) concentrations usually indicate contamination with another oil type, primarily MIL-PRF-2104. Recommend resampling and retesting immediately. If new value exceeds 8.0 PPM, run check with D19-0 to ensure proper instrument function. When proper function is confirmed, report both results and suspected contamination with MIL-PRF-2104 to chain of command, maintenance chief, cognizant engineering authority (Army and Navy only), and other personnel as specified by local written procedures. Recommend flushing and retesting of contaminated pre-oilers, carts, or other reservoirs where contamination is found until both B and Zn concentrations fall below 8.0 PPM. Refer to JOAP Manual Volume II Section IX, page 9-1 for more information. Recommend segregation of confirmed or suspected contaminated stocks, and submit information (batch no., lot no., MIL-PRF, nature of problem, etc.) on such stocks through the Defense supply deficiency reporting system.

Elevated silicon (Si) concentration usually indicates contamination with soil, sand, or dust. If aluminum (Al) is also elevated, this suggests the presence of clay or soil. Recommend resampling and retesting immediately. If new value exceeds 8.0 PPM, run check with D19-0 to ensure proper instrument function. When proper function is confirmed, report both results and suspected contamination with soil, sand, or dust to chain of command, maintenance chief, cognizant engineering authority (Army and Navy only), and other personnel as specified by local written procedures. Recommend flushing and retesting of contaminated pre-oilers, carts, or other reservoirs where contamination is found until silicon concentration falls below 8.0 PPM. Refer to JOAP Manual Volume II Section IX, page 9-1 for more information. Recommend segregation of confirmed or suspected contaminated stocks, and submit information (batch no., lot no., MIL-PRF, nature of problem, etc.) on such stocks through the Defense supply deficiency reporting system.

When Fe increases in combination with an increase in Mg, the discrepancy is usually with the accessory gear case. When Fe increases in combination with an increase in Cu, the discrepancy may be a main shaft bearing; usually No. 3. High Fe, Cu and Mg in combination usually indicate discrepancy with the tower shaft bearing. Increases in Mg by itself indicate defect in accessory gear case. Fuel contamination of oil indicates rupture of fuel oil cooler.

ENGINE: J60-P-3/-5 (AIR FORCE) (Cont.)
AIRCRAFT: (T-39)

NOTES

High lead concentrations alone in J60 engine used oil DO NOT warrant engine removal and repair actions. Lead plating on No. 1 bearing, P/N 410787, is source of lead.

Fe	Main bearing balls/rollers and races Gearbox gears
Fe Al	Pressure and scavenge oil pump
Fe Ag Cu & Si Sn	Gearbox bearings.
Ag Cu & Si Sn	Main bearing cages
Al Mg	Gearbox housing and adapters
Ti	Compressor rotor front hub

OIL CAPACITY AND CONSUMPTION INFORMATION

1. Oil Capacity of the engine is 5 quarts. Ref. T.O. 1T-39A-2-1.
2. Allowable oil consumption rate (quantity per time) shall not exceed ¾ pint per hour (Ref T.O. 1T-39A-2-1).
3. Recommended engine oil consumption inspection interval: At 500-hour maintenance inspection or when engine is suspected of excessive oil usage.
4. Action to take if maximum oil consumption rate is exceeded: Identify/correct cause of high oil consumption.

ENGINE: J60-P-3/-6 AND JT12A (NAVY)
AIRCRAFT: (T-2B) (T-39D) (CT-39D) (CT-39G)

JOAP ATOMIC EMISSION ROTRODE

	Fe	Ag	Al	Cr	Cu	Mg	Ti	B	Si	Zn
Abnormal Trend (PPM Increase in 10 hrs)	6	3	3	3	3	6	3			
Normal Range	0-20	0-6	0-8	0-6	0-7	0-18	0-8			
Marginal Range	21-25	7	9	7	8	19-22	9			
High Range	26-30	8	10-11	8	9-11	23-26	10-11			
Abnormal	≥31	≥9	≥12	≥9	≥12	≥27	≥12	10	10	10

Elevated boron (B) and/or zinc (Zn) concentrations usually indicate contamination with another oil type, primarily MIL-PRF-2104. Recommend resampling and retesting immediately. If new value exceeds 8.0 PPM, run check with D19-0 to ensure proper instrument function. When proper function is confirmed, report both results and suspected contamination with MIL-PRF-2104 to chain of command, maintenance chief, cognizant engineering authority (Army and Navy only), and other personnel as specified by local written procedures. Recommend flushing and retesting of contaminated pre-oilers, carts, or other reservoirs where contamination is found until both B and Zn concentrations fall below 8.0 PPM. Refer to JOAP Manual Volume II Section IX, page 9-1 for more information. Recommend segregation of confirmed or suspected contaminated stocks, and submit information (batch no., lot no., MIL-PRF, nature of problem, etc.) on such stocks through the Defense supply deficiency reporting system.

Elevated silicon (Si) concentration usually indicates contamination with soil, sand, or dust. If aluminum (Al) is also elevated, this suggests the presence of clay or soil. Recommend resampling and retesting immediately. If new value exceeds 8.0 PPM, run check with D19-0 to ensure proper instrument function. When proper function is confirmed, report both results and suspected contamination with soil, sand, or dust to chain of command, maintenance chief, cognizant engineering authority (Army and Navy only), and other personnel as specified by local written procedures. Recommend flushing and retesting of contaminated pre-oilers, carts, or other reservoirs where contamination is found until silicon concentration falls below 8.0 PPM. Refer to JOAP Manual Volume II Section IX, page 9-1 for more information. Recommend segregation of confirmed or suspected contaminated stocks, and submit information (batch no., lot no., MIL-PRF, nature of problem, etc.) on such stocks through the Defense supply deficiency reporting system.

When Fe increases in combination with an increase in Mg, the discrepancy is usually with the accessory gear case. When Fe increases in combination with an increase in Cu, the discrepancy may be a main shaft bearing, usually No. 3. High, Fe, Cu and Mg in combination usually indicates discrepancy with the tower shaft bearing. Increases in Mg by itself indicates defect in accessory gear case. Fuel contamination of oil indicates rupture of fuel oil cooler.

Fe	Main bearing balls/rollers and races Gearbox gears
Fe Al	Pressure and scavenge oil pump

ENGINE: J60-P-3/-6 AND JT12A (NAVY) (Cont.)
AIRCRAFT: (T-2B) (T-39D) (CT-39D) (CT-39G)

Fe Ag Cu & Si Sn	Gearbox bearings
Ag Cu & Si Sn	Main bearing cages
Al Mg	Gearbox housing and adapters
Ti	Compressor rotor front hub

ENGINE: J69-T-25/-25A
AIRCRAFT: (T-37)

JOAP ATOMIC EMISSION ROTRODE

	Fe	Ag	Al	Cr	Cu	Mg	B	Si	Zn
[1]Abnormal Trend (PPM Increase in 10 hrs)*	8	3	4	4	3	4			
Normal Range	0-8	0	0-1	0	0-7	0-2			
Marginal Range	9-15	1-2	2-3	1-2	8-9	3-8			
High Range	16-40	3-9	4-14	3-18	10-11	9-14			
Abnormal	≥41	≥10	≥15	≥19	≥12	≥15	10	10	10

[1]If the calculated PPM trend value is equal to or greater than the trend PPM value limit, the engine has an abnormal trend.

Elevated boron (B) and/or zinc (Zn) concentrations usually indicate contamination with another oil type, primarily MIL-PRF-2104. Recommend resampling and retesting immediately. If new value exceeds 8.0 PPM, run check with D19-0 to ensure proper instrument function. When proper function is confirmed, report both results and suspected contamination with MIL-PRF-2104 to chain of command, maintenance chief, cognizant engineering authority (Army and Navy only), and other personnel as specified by local written procedures. Recommend flushing and retesting of contaminated pre-oilers, carts, or other reservoirs where contamination is found until both B and Zn concentrations fall below 8.0 PPM. Refer to JOAP Manual Volume II Section IX, page 9-1 for more information. Recommend segregation of confirmed or suspected contaminated stocks, and submit information (batch no., lot no., MIL-PRF, nature of problem, etc.) on such stocks through the Defense supply deficiency reporting system.

Elevated silicon (Si) concentration usually indicates contamination with soil, sand, or dust. If aluminum (Al) is also elevated, this suggests the presence of clay or soil. Recommend resampling and retesting immediately. If new value exceeds 8.0 PPM, run check with D19-0 to ensure proper instrument function. When proper function is confirmed, report both results and suspected contamination with soil, sand, or dust to chain of command, maintenance chief, cognizant engineering authority (Army and Navy only), and other personnel as specified by local written procedures. Recommend flushing and retesting of contaminated pre-oilers, carts, or other reservoirs where contamination is found until silicon concentration falls below 8.0 PPM. Refer to JOAP Manual Volume II Section IX, page 9-1 for more information. Recommend segregation of confirmed or suspected contaminated stocks, and submit information (batch no., lot no., MIL-PRF, nature of problem, etc.) on such stocks through the Defense supply deficiency reporting system.

Any T-37 oil sample that flames up in the oil analysis spectrometer will prompt the JOAP lab to place the engine on code T (tear down). Fuel contamination of the oil will be reported to responsible activity when detected. Fe is principal wear metal. Gradual increase in Fe near or to the abnormal value over a long period of time (several hundred flying hours) is sometimes indicative of rotational movement of the No. 2 bearing. This rotational movement, or creep, characteristic is normal and is a design feature of the No. 2 bearing. Rapid increases in Fe are sometimes indicative of accessory drive gear shaft nut backing off because of a sheared tang on the nut lock.

ENGINE: J69-T-25/-25A (Cont.)
AIRCRAFT: (T-37)

Rapid increases in Al, to or exceeding abnormal value, can sometimes be attributed to improper stack up of the engine resulting in rub of the No. 2 bearing labyrinth seal against the turbine shaft. When Cr approaches the abnormal value, it is a possible indication of wear in the No. 2 bearing housing, or front and rear turbine shaft. Increases in Ag are indicative of bearing wear and are usually in combination with high Fe and Cu. Increases in Cu and Mg individually, or together, are an indication of problem in the accessory case section.

Fe	Main bearing balls/rollers and races Starter generator and accessory drive gears Accessory case gears
Fe Al & Cr	Accessory oil pump
Fe Ag Cu & Sn	Accessory case bearings
Cu Sn	Starter generator and accessory drive bearing cages.
Cu & Ag	Main bearing cages
Al Mg	Accessory case housing and adapters

OIL CAPACITY AND CONSUMPTION INFORMATION REFERENCE MATERIAL

1. The engine oil capacity is 6 quarts (4.5 usable quarts).
2. The allowable oil consumption rate is 1.5 quarts per hour.
3. Oil consumption inspection interval is after each flight, within 10 minutes of engine shutdown.
4. If maximum allowable oil consumption is exceeded, check lines and seals for leaks.

ENGINE: J75-P-13/-17/-19
AIRCRAFT: (U-2)

JOAP ATOMIC EMISSION ROTRODE

	Fe	Ag	Al	Cr	Cu	Mg	Ti	B	Si	Zn
Abnormal Trend (PPM Increase in 10 hrs)	9	2	3	2	3	4	2			
Normal Range	0-30	0-3	0-8	0-4	0-6	0-12	0-2			
Marginal Range	31-37	N/A	9	5	7	13-15	3			
High Range	38-44	4	10-11	6	8-9	16-17	4			
Abnormal	≥45	≥5	≥12	≥7	≥10	≥18	≥5	10	10	10

Elevated boron (B) and/or zinc (Zn) concentrations usually indicate contamination with another oil type, primarily MIL-PRF-2104. Recommend resampling and retesting immediately. If new value exceeds 8.0 PPM, run check with D19-0 to ensure proper instrument function. When proper function is confirmed, report both results and suspected contamination with MIL-PRF-2104 to chain of command, maintenance chief, cognizant engineering authority (Army and Navy only), and other personnel as specified by local written procedures. Recommend flushing and retesting of contaminated pre-oilers, carts, or other reservoirs where contamination is found until both B and Zn concentrations fall below 8.0 PPM. Refer to JOAP Manual Volume II Section IX, page 9-1 for more information. Recommend segregation of confirmed or suspected contaminated stocks, and submit information (batch no., lot no., MIL-PRF, nature of problem, etc.) on such stocks through the Defense supply deficiency reporting system.

Elevated silicon (Si) concentration usually indicates contamination with soil, sand, or dust. If aluminum (Al) is also elevated, this suggests the presence of clay or soil. Recommend resampling and retesting immediately. If new value exceeds 8.0 PPM, run check with D19-0 to ensure proper instrument function. When proper function is confirmed, report both results and suspected contamination with soil, sand, or dust to chain of command, maintenance chief, cognizant engineering authority (Army and Navy only), and other personnel as specified by local written procedures. Recommend flushing and retesting of contaminated pre-oilers, carts, or other reservoirs where contamination is found until silicon concentration falls below 8.0 PPM. Refer to JOAP Manual Volume II Section IX, page 9-1 for more information. Recommend segregation of confirmed or suspected contaminated stocks, and submit information (batch no., lot no., MIL-PRF, nature of problem, etc.) on such stocks through the Defense supply deficiency reporting system.

High Fe or Fe in combination with Cu usually indicates bearing trouble, particularly Nos. 3, 4, or 5 bearings. Increase in Mg which may be accompanied with increase in Fe indicate possible discrepancy due to fretting of the bearing liner in the main gearbox. High Al and Fe may indicate defective oil pump. Ti is a significant wear metal. Increases in Ti are indicative of the spacer between Nos. 2, 2½ and 3 bearing turning on the shaft. High Fe together with high Ti indicate discrepancy in the Nos. 2, 2½ and No. 3 bearing area.

NOTES

High Al by itself may be indicative of worn threaded area on oil tank breather tee fitting and is due to movement of fitting.

ENGINE: J75-P-13/-17/-19 (Cont.)
AIRCRAFT: (U-2)

Fe	Main bearing balls/rollers, races, seals and housing Front accessory drive gears Main accessory drive gears and housing Main gearbox gears
Fe Al	Front accessory drive oil pump Main gearbox oil pump
Fe Ag	No. 3 bearing cages Main accessory drive bearings
Fe Ag Cu & Si Sn	Main gearbox bearings
Ag Cu & Si Sn	Nos. 1, 2, 2½, 4, 4½, 5 and 6 bearings cages
Mg	Front accessory drive and main gearbox housing
Ti	No. 2 hub shaft between Nos. 2, 2½, and 3 main bearing.

ENGINE: J79-GE-15/-17 (AIR FORCE)
AIRCRAFT: (F-4)

JOAP ATOMIC EMISSION ROTRODE

	Fe	Ag	Al	Cr	Cu	Mg	B	Si	Zn
Abnormal Trend (PPM Increase in 10 hrs)	11	2	3	6	5	4			
Normal Range	0-29	0-3	0-8	0-10	0-18	0-14			
Marginal Range	30-36	4	9	11-12	19-22	15-17			
High Range	37-44	5	10-11	13-14	23-27	18-21			
Abnormal	≥45	≥6	≥12	≥15	≥28	≥22	10	10	10

Elevated boron (B) and/or zinc (Zn) concentrations usually indicate contamination with another oil type, primarily MIL-PRF-2104. Recommend resampling and retesting immediately. If new value exceeds 8.0 PPM, run check with D19-0 to ensure proper instrument function. When proper function is confirmed, report both results and suspected contamination with MIL-PRF-2104 to chain of command, maintenance chief, cognizant engineering authority (Army and Navy only), and other personnel as specified by local written procedures. Recommend flushing and retesting of contaminated pre-oilers, carts, or other reservoirs where contamination is found until both B and Zn concentrations fall below 8.0 PPM. Refer to JOAP Manual Volume II Section IX, page 9-1 for more information. Recommend segregation of confirmed or suspected contaminated stocks, and submit information (batch no., lot no., MIL-PRF, nature of problem, etc.) on such stocks through the Defense supply deficiency reporting system.

Elevated silicon (Si) concentration usually indicates contamination with soil, sand, or dust. If aluminum (Al) is also elevated, this suggests the presence of clay or soil. Recommend resampling and retesting immediately. If new value exceeds 8.0 PPM, run check with D19-0 to ensure proper instrument function. When proper function is confirmed, report both results and suspected contamination with soil, sand, or dust to chain of command, maintenance chief, cognizant engineering authority (Army and Navy only), and other personnel as specified by local written procedures. Recommend flushing and retesting of contaminated pre-oilers, carts, or other reservoirs where contamination is found until silicon concentration falls below 8.0 PPM. Refer to JOAP Manual Volume II Section IX, page 9-1 for more information. Recommend segregation of confirmed or suspected contaminated stocks, and submit information (batch no., lot no., MIL-PRF, nature of problem, etc.) on such stocks through the Defense supply deficiency reporting system.

ENGINE: J79-GE-8/-10 (NAVY) (Cont.)
AIRCRAFT: (F-4)

Caution must be exercised when evaluating this system due to the common oil supply of engine and CSD. When Fe increases by itself or in combination with Cu, recommend transfer gearbox starter drive area be checked for loose nut on drive or for broken carbon seal. Also recommend inspection of the front of transfer gearbox for same problem and inspection of filters including CSD filter. When Cu increases in combination with Fe, but Cu is higher, the problem will usually be in the CSD. High Mg is usually indicative of discrepancy in the gearbox. Any increase in Ag in usually indicative of incipient No. 2 bearing failure and will be accompanied with high Fe with or without increases in Cu.

Fe & Ni	Main bearing housings
Fe & Cr	Afterburner fuel pump gears and bearings No. 2 bearings, balls and races
Fe & Cr Ni	No. 1 bearing rollers, races and carbon seal runners Gearbox gears, shafts and splines
Fe & Cr Al or Ni	No. 3 bearing rollers and races
Fe & Cr Cu or Ni	Accessory variable nozzle actuator
Fe Cu & Al Si	Accessory main lube and hydraulic pump
Fe Cu & Al Ni	Accessory scavenge pumps
Fe Cu & Ag Cr Si	Gearbox bearings
Fe Cu Mg & Al	Constant speed drive
Fe Cu Ag* & Al Cr Sn Pb Ni Si	Accessory variable nozzle pump *Ag in 1P, 1M and 1N pumps
Fe Cu Al Mg & Cr Ni	Variable nozzle control valve
Cu & Ag Fe Si	Main bearing cages and afterburner fuel pump bearing cages
Al Mg	Gearbox castings
Cr & Fe Ni	Main bearing seal races

ENGINE: J79-GE-15/-17 (Cont.)
AIRCRAFT: (F-4)

Caution must be exercised when evaluating this system due to the common oil supply of engine and CSD. When Fe increases by itself or in combination with Cu, recommend transfer gearbox starter drive area be checked for loose nut on drive or for broken carbon seal. Also recommend inspection of the front of transfer gearbox for same problem and inspection of filters including CSD filter. When Cu increases in combination with Fe, but Cu is higher, the problem will usually be in the CSD. Also, increase in Mg and/or in combination with Fe and/or Cu may be caused by CSD's. The CSD should be removed and bench checked to determine if CSD replacement will eliminate the wear metal problems. High Mg is usually indicative of discrepancy in the gearbox.

Any increase in Ag is usually indicative of incipient No. 2 bearing failure and will be accompanied with high Fe with or without increases in Cu. When Fe increases 5 PPM, between consecutive oil samples from J79-15 and J79-17 engines without accompanying increases to other wear metals, it may be indicative of an afterburner fuel pump bearing failure. Check samples should be requested to confirm Fe increases. All unmodified afterburner fuel pumps (Part Number P/N 512D809P8, P9, P11, and P12) will be removed and sent to repairable supply. Fuel pumps with other part numbers may be retained but visually examined for discrepancies.

Fe & Ni	Main bearing housings
Fe & Cr	Afterburner fuel pump gears and bearings No. 2 bearings, balls and races
Fe & Cr Ni	No. 1 bearing rollers, races and carbon seal runners Gearbox gears, shafts and splines
Fe & Cr Al or Ni	No. 3 bearing rollers and races
Fe & Cr Cu or Ni	Accessory variable nozzle actuator
Fe Cu & Al Si	Accessory main lube and hydraulic pump
Fe Cu & Al Si	Accessory scavenge pumps
Fe Cu & Ag Cr Si	Gearbox bearings
Fe Cu Mg & Al	Constant speed drive
Fe Cu & Al Cr Sn Pb Ni Si	Accessory variable nozzle pump
Cu & Ag Fe Si	Main bearing cages and afterburner fuel pump bearing cages
Mg	Gearbox castings
Cr & Fe Ni	Main bearing seal races

ENGINE: J85-GE-4A
AIRCRAFT: (T-2C)

JOAP ATOMIC EMISSION ROTRODE

	[1]Fe	Ag	Al	Cr	[1]Cu	Mg	B	Si	Zn
Abnormal Trend (PPM Increase in 10 hrs)	9	3	4		3	5			
Normal Range	0-35	0-5	0-12		0-4	0-16			
Marginal Range	36-44	6-7	13-15		[1]5-6	17-19			
High Range	[1]45-53	8-10	16-17		13-14	20-23			
Abnormal	≥54	≥11	≥18		≥15	≥24	10	10	10

[1]Recommend remove if Fe and Cu are both in ranges indicated (High Fe and Marginal Cu). If iron (Fe) is in the high range with copper (Cu) less than 5 PPM and nickel (Ni) is approximately 15% of the iron value, recommend that the unit be placed on 5 hour sampling intervals until next aircraft phase inspection or operated for 125 hours, whichever occurs first. Inspect compressor shaft for spline wear.

Elevated boron (B) and/or zinc (Zn) concentrations usually indicate contamination with another oil type, primarily MIL-PRF-2104. Recommend resampling and retesting immediately. If new value exceeds 8.0 PPM, run check with D19-0 to ensure proper instrument function. When proper function is confirmed, report both results and suspected contamination with MIL-PRF-2104 to chain of command, maintenance chief, cognizant engineering authority (Army and Navy only), and other personnel as specified by local written procedures. Recommend flushing and retesting of contaminated pre-oilers, carts, or other reservoirs where contamination is found until both B and Zn concentrations fall below 8.0 PPM. Refer to JOAP Manual Volume II Section IX, page 9-1 for more information. Recommend segregation of confirmed or suspected contaminated stocks, and submit information (batch no., lot no., MIL-PRF, nature of problem, etc.) on such stocks through the Defense supply deficiency reporting system.

Elevated silicon (Si) concentration usually indicates contamination with soil, sand, or dust. If aluminum (Al) is also elevated, this suggests the presence of clay or soil. Recommend resampling and retesting immediately. If new value exceeds 8.0 PPM, run check with D19-0 to ensure proper instrument function. When proper function is confirmed, report both results and suspected contamination with soil, sand, or dust to chain of command, maintenance chief, cognizant engineering authority (Army and Navy only), and other personnel as specified by local written procedures. Recommend flushing and retesting of contaminated pre-oilers, carts, or other reservoirs where contamination is found until silicon concentration falls below 8.0 PPM. Refer to JOAP Manual Volume II Section IX, page 9-1 for more information. Recommend segregation of confirmed or suspected contaminated stocks, and submit information (batch no., lot no., MIL-PRF, nature of problem, etc.) on such stocks through the Defense supply deficiency reporting system.

When Fe trend is increasing and with increasing Cu, suspect main bearing or accessory bearing defect. Suspect first No. 1 main bearing; next, No. 2 main bearing or Axis "E" accessory bearing. High Fe is frequently due to Axis "C" aft carbon seal mating ring wearing into Axis "C" aft bearing inner race. High Fe is also due to combination of Axis "B" forward and Axis "F" forward bearing outer races spinning in their housings.

ENGINE: J85-GE-4A (Cont.)
AIRCRAFT: (T-2C)

J85 Power Plant Change 5 provides for chromium plating of Axis "B" forward, Axis "C" aft and Axis "D" forward bearing housings. This change should reduce high Fe. Outer races turning will show increasing and high chromium. Fuel contamination can be detected by the sampling catching fire. Small concentrations of fuel will be detected by odor. Recommend inspection of fuel heat exchanger or fuel pump.

Fe & Ni	No. 1 bearing races
Fe & Cr	No. 1 bearing rollers and front frame casing Nos. 2 and 3 bearing support Accessory drive gearbox and PTO bearing balls/rollers and races Accessory drive gearbox seal and bearing housings
Fe & Cr Ni	Gearbox bearing spinning in liners, PTO scavenge tube Main bearing carbon seal runners No. 1 bearing compressor rotor front shaft No. 2 bearing locknut and compressor driveshaft No. 3 bearing locknut and turbine wheel shaft PTO radial driveshaft, bevel gears, bearing housing, axial bearing support and retainer Accessory lube and scavenge pump spur gear, lube filter and oil cooler valve Accessory drive gearbox shaft and bevel gears
Fe & Cr	Accessory drive gearbox gear locknut
Ni Si	
Fe & Cr	PTO and No. 2 bearing retainer
Ni Mg	Accessory drive gearbox spanner nuts
Fe & Cr Al	Nos. 2 and 3 bearing balls/rollers and races Accessory drive gearbox seal mating rings Accessory lube and scavenge pump rotors, liners and blades
Al	Accessory oil cooler housing, oil pressure transducer and oil tank Rotor wear in front frame sump
Al & Mg Si	Accessory filter bypass relief valve housing
Al & Cu	Accessory lube and scavenge pump housing
Mg Si	
Cu & Al	Accessory lube and scavenge pump bearings
Fe Pb Si	
Mg Si &	Main and PTO bearing cages
Fe Ag	Accessory drive gearbox bearing cages

ENGINE: J85-GE-5/-13
AIRCRAFT: (T-38) (F-5)

JOAP ATOMIC EMISSION ROTRODE

	Fe	Ag	Al	Cr	Cu	Mg	B	Si	Zn
[1]Abnormal Trend (PPM Increase in 10 hrs)*	10	2	2	3	3	4			
Normal Range	0-10	0	0-1	0	0-1	0-3			
Marginal Range	11-28	1-2	2-3	1-2	2-4	4-10			
High Range	29-49	3-6	4-7	3-8	5-11	11-21			
Abnormal	≥50	≥7	≥8	≥9	≥12	≥22	10	10	10

[1]If the calculated PPM trend value is equal to or greater than the trend PPM value limit, the engine has an abnormal trend.

Elevated boron (B) and/or zinc (Zn) concentrations usually indicate contamination with another oil type, primarily MIL-PRF-2104. Recommend resampling and retesting immediately. If new value exceeds 8.0 PPM, run check with D19-0 to ensure proper instrument function. When proper function is confirmed, report both results and suspected contamination with MIL-PRF-2104 to chain of command, maintenance chief, cognizant engineering authority (Army and Navy only), and other personnel as specified by local written procedures. Recommend flushing and retesting of contaminated pre-oilers, carts, or other reservoirs where contamination is found until both B and Zn concentrations fall below 8.0 PPM. Refer to JOAP Manual Volume II Section IX, page 9-1 for more information. Recommend segregation of confirmed or suspected contaminated stocks, and submit information (batch no., lot no., MIL-PRF, nature of problem, etc.) on such stocks through the Defense supply deficiency reporting system.

Elevated silicon (Si) concentration usually indicates contamination with soil, sand, or dust. If aluminum (Al) is also elevated, this suggests the presence of clay or soil. Recommend resampling and retesting immediately. If new value exceeds 8.0 PPM, run check with D19-0 to ensure proper instrument function. When proper function is confirmed, report both results and suspected contamination with soil, sand, or dust to chain of command, maintenance chief, cognizant engineering authority (Army and Navy only), and other personnel as specified by local written procedures. Recommend flushing and retesting of contaminated pre-oilers, carts, or other reservoirs where contamination is found until silicon concentration falls below 8.0 PPM. Refer to JOAP Manual Volume II Section IX, page 9-1 for more information. Recommend segregation of confirmed or suspected contaminated stocks, and submit information (batch no., lot no., MIL-PRF, nature of problem, etc.) on such stocks through the Defense supply deficiency reporting system.

No. 2 main bearing is a major problem area detectable by JOAP. These failures usually occur rapidly. Maintain close surveillance even when small increases in Fe are noted. High Fe and Cu (with/without Ag) indicate main or accessory bearing defect. Suspect first, No. 3 and No. 2 main bearings; next, Axis "E" accessory bearing. High Fe is also frequently due to defect in gearbox Axis "B" bearing. High Ag alone may indicate fuel contamination of lube system; recommend inspection of fuel oil cooler and/or fuel pump. Fuel contamination can also occur without significant Ag present and is detectable by sample odor.

ENGINE: J85-GE-5/-13 (Cont.)
AIRCRAFT: (T-38) (F-5)

Fe & Ni	No. 1 bearing races
Fe & Cr	No. 1 bearing rollers and front frame casing Nos. 2 and 3 bearing support Accessory drive gearbox and PTO bearing balls/rollers and races Accessory drive gearbox seal and bearing housings
Fe & Cr Ni	Gearbox bearing spinning in liners, PTO scavenge tube Main bearing carbon seal runners No. 1 bearing compressor rotor front shaft No. 2 bearing locknut and compressor driveshaft No. 3 bearing locknut and turbine wheel shaft PTO radial driveshaft, bevel gears, bearing housing, axial bearing support and retainer Accessory lube and scavenge pump spur gear, lube filter and oil cooler valve Accessory drive gearbox shaft and bevel gears
Fe & Cr Ni Si	Accessory drive gearbox gear locknut
Fe & Cr	PTO and No. 2 bearing retainer
Ni Mg	Accessory drive gearbox spanner nuts
Fe & Cr A	Nos. 2 and 3 bearing balls/rollers and races Accessory drive gearbox seal mating rings Accessory lube and scavenge pump rotors, liners and blades
Al	Accessory oil cooler housing, oil pressure transducer and oil tank Rotor wear in front frame sump
Al & Mg Si	Accessory filter bypass relief valve housing
Al & Cu Mg Si	Accessory lube and scavenge pump bearings
Cu & Al Fe Pb Si	Accessory lube and scavenge pump bearings
Cu Si & Fe Ag	Main and PTO bearing cages Accessory drive gearbox bearing cages

ENGINE: J85-GE-5/-13 (Cont.)
AIRCRAFT: (T-38) (F-5)

OIL CAPACITY AND CONSUMPTION INFORMATION

1. The oil capacity for the J85-GE-5/-13 is four quarts.

2. The maximum allowable oil consumption for the J85-GE-13 is one-half (½) pint per hour. The maximum allowable oil consumption for the J85-GE-5 is three-eighths (⅜) pint per hour.

3. There is no recommended oil consumption interval in the manuals, but check the oil level after each flight and after a test cell run.

4. Action to take if maximum allowable oil consumption is exceeded:

a. External oil leaking: Check all external oil lines for leaks and make any necessary corrections.

b. Loose or leaking oil filler caps: Check filler caps for proper assembly and for damaged packings. Tighten caps or replace packing.

c. Oil venting from oil tank relief valve: Check for overfilled tank. Remove and replace tank relief valve.

d. Internal oil leak: Return engine to shop for further investigation. Disassemble engine and inspect for missing or damaged packing and for damaged or leaking carbon seals. Replace damaged parts as necessary.

ENGINE: J85-GE-21/-21B/-21C (NAVY)
AIRCRAFT: (F-5E/F)

JOAP ATOMIC EMISSION ROTRODE

	Fe	Ag	Al	Cr	Cu	Mg	Ti	B	Si	Zn
[1]Abnormal Trend (PPM Increase in 10 hrs)*	10	2	2	3	3	4	3			
Normal Range	0-16	0-1	0-1	0-1	0-1	0-3	0-2			
Marginal Range	17-38	2	2	2	2	4-9	3			
High Range	39-49	3	3	3	3	10-15	4			
Abnormal	≥50	≥4	≥4	≥4	≥4	≥16	≥5	10	10	10

[1]If the calculated PPM trend value is equal to or greater than the trend PPM value limit, the engine has an abnormal trend.

Elevated boron (B) and/or zinc (Zn) concentrations usually indicate contamination with another oil type, primarily MIL-PRF-2104. Recommend resampling and retesting immediately. If new value exceeds 8.0 PPM, run check with D19-0 to ensure proper instrument function. When proper function is confirmed, report both results and suspected contamination with MIL-PRF-2104 to chain of command, maintenance chief, cognizant engineering authority (Army and Navy only), and other personnel as specified by local written procedures. Recommend flushing and retesting of contaminated pre-oilers, carts, or other reservoirs where contamination is found until both B and Zn concentrations fall below 8.0 PPM. Refer to JOAP Manual Volume II Section IX, page 9-1 for more information. Recommend segregation of confirmed or suspected contaminated stocks, and submit information (batch no., lot no., MIL-PRF, nature of problem, etc.) on such stocks through the Defense supply deficiency reporting system.

Elevated silicon (Si) concentration usually indicates contamination with soil, sand, or dust. If aluminum (Al) is also elevated, this suggests the presence of clay or soil. Recommend resampling and retesting immediately. If new value exceeds 8.0 PPM, run check with D19-0 to ensure proper instrument function. When proper function is confirmed, report both results and suspected contamination with soil, sand, or dust to chain of command, maintenance chief, cognizant engineering authority (Army and Navy only), and other personnel as specified by local written procedures. Recommend flushing and retesting of contaminated pre-oilers, carts, or other reservoirs where contamination is found until silicon concentration falls below 8.0 PPM. Refer to JOAP Manual Volume II Section IX, page 9-1 for more information. Recommend segregation of confirmed or suspected contaminated stocks, and submit information (batch no., lot no., MIL-PRF, nature of problem, etc.) on such stocks through the Defense supply deficiency reporting system.

No. 2 main bearing is a major problem area detectable by JOAP. These failures usually occur rapidly. Maintain close surveillance even when small increases in Fe are noted. High Fe and Cu (with/without Ag) indicate main or accessory bearing defect. Suspect first, No. 3 and No. 2 main bearings, next, Axis "E" accessory bearing. High Ag alone indicated fuel contamination of lube system; recommend inspection of fuel oil cooler and/or fuel pump.

ENGINE: J85-GE-21/-21B/-21C (NAVY) (Cont.)
AIRCRAFT: (F-5E/F)

Fe	PTO shaft gear bearing shim
Fe & Ni	No. 1 bearing races
Fe & Cr	No. 1 bearing rollers and front frame casing Nos. 2 and 3 bearing support Accessory drive gearbox and PTO bearing balls/rollers and races Accessory drive gearbox seal and bearing housings
Fe & Cr Ni	Gearbox bearing spinning in liners, PTO scavenge tube Main bearing carbon seal runners No. 1 bearing compressor rotor front shaft No. 2 bearing locknut and compressor driveshaft No. 3 bearing locknut and turbine wheel shaft PTO radial driveshaft, bevel gears, bearing housing, axial bearing support and retainer Accessory lube and scavenge pump spur gear, lube filter and oil cooler valve Accessory drive gearbox shaft and bevel gears
Fe & Ti Cr	No. 1 bearing inner race and carbon seal runner (-21) No. 1 bearing compressor rotor front shaft (-21 only) ENGINE: J85-GE-21/-21B/-21C (Cont.) AIRCRAFT: (F-5E/F)
Fe & Cr	PTO and No. 2 bearing retainer
Ni Mg	Accessory drive gearbox spanner nuts
Fe &	Accessory drive gearbox gear locknut
Cr Ni Si	
Fe & Cr Al	Nos. 2 and 3 bearing balls/rollers and races Accessory drive gearbox seal mating rings Accessory lube and scavenge pump rotors, liners and blades
Al	Accessory oil cooler housing, oil pressure transducer and oil tank Rotor wear in front frame sump
Al & Mg Si	Accessory filter bypass relief valve housing
Al &	Accessory lube and scavenge pump bearings
Cu Mg Si	
Cu &	Accessory lube and scavenge pump bearings
Al Fe Pb Si	
Cu Si &	Main and PTO bearing cages
Fe Ag	Accessory drive gearbox bearing cages

ENGINE: J85-GE-21/-21B/-21C (NAVY) (Cont.)
AIRCRAFT: (F-5E/F)

OIL CAPACITY AND CONSUMPTION INFORMATION

1. The oil capacity for the J85-GE-21 is four quarts.

2. The maximum allowable oil consumption rate (quantity per time) for the J85-GE-21 is one-half (½) pint per hour.

3. There is no recommended oil consumption interval in the manuals, but check the oil level after each flight and after a test cell run.

4. Action to take if maximum allowable oil consumption is exceeded:

a. External oil leaking: Check all external oil lines for leaks and make any necessary corrections.

b. Loose or leaking oil filler caps: Check filler caps for proper assembly and for damaged packings. Tighten caps or replace packing.

c. Oil venting from oil tank relief valve: Check for overfilled tank. Remove and replace tank relief valve.

d. Internal oil leak: Return engine to shop for further investigation. Disassemble engine and inspect for missing or damaged packings and for damaged or leaking carbon seals. Replace damaged parts as necessary.

ENGINE: PT-6A-25 (NAVY)
AIRCRAFT: (T-34C)

JOAP ATOMIC EMISSION ROTRODE

	Fe	Ag	Al	Cr	Cu	Mg	Ti	Ni	Sn	Si	B	Zn
Abnormal Trend (PPM Increase in 10 hrs)	4	3	4	3	3	3	2	3	4	3		
Normal Range	0-11	0-6	0-11	0-4	0-6	0-6	0-1	0-4	0-19	0-27		
Marginal Range	12-14	7	12-13	5-6	7	7	2-3	5-6	20-22	28-30		
High Range	15-17	8-9	14-15	7	8-9	8-9	4-5	7-8	23-24	31-34		
Abnormal	≥18	≥10	≥16	≥8	≥10	≥10	≥6	≥9	≥25	≥35	10	10

Elevated boron (B) and/or zinc (Zn) concentrations usually indicate contamination with another oil type, primarily MIL-PRF-2104. Recommend resampling and retesting immediately. If new value exceeds 8.0 PPM, run check with D19-0 to ensure proper instrument function. When proper function is confirmed, report both results and suspected contamination with MIL-PRF-2104 to chain of command, maintenance chief, cognizant engineering authority (Army and Navy only), and other personnel as specified by local written procedures. Recommend flushing and retesting of contaminated pre-oilers, carts, or other reservoirs where contamination is found until both B and Zn concentrations fall below 8.0 PPM. Refer to JOAP Manual Volume II Section IX, page 9-1 for more information. Recommend segregation of confirmed or suspected contaminated stocks, and submit information (batch no., lot no., MIL-PRF, nature of problem, etc.) on such stocks through the Defense supply deficiency reporting system.

Fe			Accessory gears, main bearings, races and splines
Fe	Cu	Ag	Main bearings and bearing cages
Fe	Cu	Al	Accessory bushing bearing turning in magnesium housing
Fe	Cu	Mg	Accessory bushing bearing turning in magnesium housing
Ag			Plating on bearing cages
Si			Oil contamination
Sn			Plating on planet gear bearing carriers

ENGINE: PT6A-34B
AIRCRAFT: (T-44A)

JOAP ATOMIC EMISSION ROTRODE

	Fe	Ag	Al	Cr	Cu	Mg	Ti	Ni	Sn	Si	B	Zn
Abnormal Trend (PPM Increase in 10 hrs)	4	3	4	3	3	3	2	3	4	3		
Normal Range	0-11	0-6	0-11	0-4	0-6	0-6	0-1	0-4	0-19	0-27		
Marginal Range	12-14	7	12-13	5-6	7	7	2-3	5-6	20-22	28-30		
High Range	15-17	8-9	14-15	7	8-9	8-9	4-5	7-8	23-24	31-34		
Abnormal	≥18	≥10	≥16	≥8	≥10	≥10	≥6	≥9	≥25	≥35	10	10

Elevated boron (B) and/or zinc (Zn) concentrations usually indicate contamination with another oil type, primarily MIL-PRF-2104. Recommend resampling and retesting immediately. If new value exceeds 8.0 PPM, run check with D19-0 to ensure proper instrument function. When proper function is confirmed, report both results and suspected contamination with MIL-PRF-2104 to chain of command, maintenance chief, cognizant engineering authority (Army and Navy only), and other personnel as specified by local written procedures. Recommend flushing and retesting of contaminated pre-oilers, carts, or other reservoirs where contamination is found until both B and Zn concentrations fall below 8.0 PPM. Refer to JOAP Manual Volume II Section IX, page 9-1 for more information. Recommend segregation of confirmed or suspected contaminated stocks, and submit information (batch no., lot no., MIL-PRF, nature of problem, etc.) on such stocks through the Defense supply deficiency reporting system.

Fe			Accessory gears, main bearings, races and splines
Fe	Cu	Ag	Main bearings and bearing cages
Fe	Cu	Al	Accessory bushing bearing turning in magnesium housing
Fe	Cu	Mg	Accessory bushing bearing turning in magnesium housing
Ag			Plating on bearing cages
Si			Oil contamination
Sn			Plating on planet gear bearing carriers

ENGINE: PT6A-68
AIRCRAFT: (T-6A)

JOAP ATOMIC EMISSION ROTRODE

	Fe	Ag	Al	Cr	Cu	Mg	Ni	Si	Ti	B	Zi
Abnormal Trend (PPM Increase in 10 hrs)	3	3	4	3	3	3	3	10	2		
Normal Range	0-6	0-3	0-6	0-2	0-3	0-2	0-3	0-10	0-3		
Marginal Range	7-11	4-6	7-11	3-4	4-6	3-4	4-5	11-27	4-5		
High Range	12-15	7-8	12-16	5-6	7-9	5-6	6-7	28-34	6-7		
Abnormal	≥16	≥9	≥17	≥7	≥10	≥7	≥8	≥35	≥8	10	10

Elevated boron (B) and/or zinc (Zn) concentrations usually indicate contamination with another oil type, primarily MIL-PRF-2104. Recommend resampling and retesting immediately. If new value exceeds 8.0 PPM, run check with D19-0 to ensure proper instrument function. When proper function is confirmed, report both results and suspected contamination with MIL-PRF-2104 to chain of command, maintenance chief, cognizant engineering authority (Army and Navy only), and other personnel as specified by local written procedures. Recommend flushing and retesting of contaminated pre-oilers, carts, or other reservoirs where contamination is found until both B and Zn concentrations fall below 8.0 PPM. Refer to JOAP Manual Volume II Section IX, page 9-1 for more information. Recommend segregation of confirmed or suspected contaminated stocks, and submit information (batch no., lot no., MIL-PRF, nature of problem, etc.) on such stocks through the Defense supply deficiency reporting system.

The corresponding recommended maintenance action for the PT6A-6B engine based on the JOAP results is as follows:

1. Normal or marginal range: continue engine in service and maintain normal sampling schedule.

2. High or abnormal range:
   a. Inspect the engine oil filter element. If the engine is serviceable per maintenance manual, continue in service.
   b. Perform the following after the next flight:
      (1) Take a second oil sample and analyze.
      (2) Inspect the engine oil filter element. If engine is serviceable per maintenance manual, continue in service.
      (3) If analysis of the second oil sample indicates the presence of elements in marginal or normal ranges, continue engine in service and maintain normal JOAP sampling schedule.
      (4) If analysis of the second oil sample indicates the presence of elements in high or abnormal ranges, continue engine in service and refer to revised JOAP sample Interval and Maintenance action in (5) below.
      (5) Revised JAOP sample interval and maintenance action for second sample test results indicating an abnormal trend or the presence of elements in high or abnormal range:
         (a) Perform a ground engine run, take an oil sample and analyze.

ENGINE: PT6A-6B (Cont.)
AIRCRAFT: (T-6A)

(b) Inspect the engine oil filter element. If engine is serviceable per maintenance manual, continue operating engine.
(c) If analysis of the ground engine run oil sample indicates the presence of elements in the high or abnormal ranges, return engine to an approved facility for investigation.

3. Abnormal trend.
   a. Take a second oil sample prior to the next flight to confirm the abnormal trend.
   b. If the second sample taken prior to the next flight indicates a return to typical normal readings, return the engine to service and resume normal engine JOAP sampling schedule.
   c. If the second sample taken prior to the next flight indicates a result which continues to fall within the abnormal trend column, perform maintenance actions in step 2.b.(5).

4. It is recommended that engine oil JOAP samples are taken:

   a. After the engine has run for at least 30 minutes.
   b. Within 10 minutes of engine shutdown.
   c. Prior to the addition of new engine oil.
   d. From the same location on the engine each time samples are taken.

5. The wearmetal limits are derived from the analysis of results of engine JOAP history data supplied by the field labs. These limits will be revised as new data becomes available and experience is gathered on the PT6A-6B engines.

ENGINE: T53-L-13B, T53-L-703 (AIR FORCE)
AIRCRAFT: (UH-1H, TH-1H)

JOAP ATOMIC EMISSION ROTRODE

	Fe	Ag	Al	Cr	Cu	Mg	Si	B	Zn
[1]Abnormal Trend (PPM Increase in 10 hrs)*	4	2	4	2	3	4	10		
Normal Range	0-10	0	0	0	0	0	0-15		
Marginal Range	11-16	1-3	1-12	1-6	1-9	1-12	16-40		
High Range	17-19	4	13-14	7	10-11	13-14	41-49		
Abnormal	≥20	≥5	≥15	≥8	≥12	≥15	≥50	10	10

[1]If the calculated PPM trend value is equal to or greater than the trend PPM value limit, the engine has an abnormal trend.

Elevated boron (B) and/or zinc (Zn) concentrations usually indicate contamination with another oil type, primarily MIL-PRF-2104. Recommend resampling and retesting immediately. If new value exceeds 8.0 PPM, run check with D19-0 to ensure proper instrument function. When proper function is confirmed, report both results and suspected contamination with MIL-PRF-2104 to chain of command, maintenance chief, cognizant engineering authority (Army and Navy only), and other personnel as specified by local written procedures. Recommend flushing and retesting of contaminated pre-oilers, carts, or other reservoirs where contamination is found until both B and Zn concentrations fall below 8.0 PPM. Refer to JOAP Manual Volume II Section IX, page 9-1 for more information. Recommend segregation of confirmed or suspected contaminated stocks, and submit information (batch no., lot no., MIL-PRF, nature of problem, etc.) on such stocks through the Defense supply deficiency reporting system.

ENGINE: T53-L-11/-13/-13B (ARMY)
AIRCRAFT: (H -1) (ALL SERIES)

JOAP ATOMIC EMISSION ROTRODE

	Fe	Al	Cr	Cu	Mg	Si	B	Zn	
Abnormal Trend (PPM Increase in 10 hrs)	3	2	2	2	2	4			
Normal Range	0-6	0-1	0-1	0-2	0-3	0-15			
Marginal Range	7	N/A	1	2	N/A	16-17			
High Range	8-9	2	2	3	4	18-23			
Abnormal	≥10	≥3	≥3	≥4	≥5	≥24	10	10	

Elevated boron (B) and/or zinc (Zn) concentrations usually indicate contamination with another oil type, primarily MIL-PRF-2104. Recommend resampling and retesting immediately. If new value exceeds 8.0 PPM, run check with D19-0 to ensure proper instrument function. When proper function is confirmed, report both results and suspected contamination with MIL-PRF-2104 to chain of command, maintenance chief, cognizant engineering authority (Army and Navy only), and other personnel as specified by local written procedures. Recommend flushing and retesting of contaminated pre-oilers, carts, or other reservoirs where contamination is found until both B and Zn concentrations fall below 8.0 PPM. Refer to JOAP Manual Volume II Section IX, page 9-1 for more information. Recommend segregation of confirmed or suspected contaminated stocks, and submit information (batch no., lot no., MIL-PRF, nature of problem, etc.) on such stocks through the Defense supply deficiency reporting system.

Fe	Bearing Speed reduction or accessory drive gearing, spacer, shims or splines
Fe & Cu	Bearings
Fe Ag & Cu	Main bearing or Gear Assemblies
Fe & Mg	Accessory bearing lining and case

ENGINE: T53-L-11/-13/-13B (ARMY) (Cont.)
AIRCRAFT: (H -1) (ALL SERIES)

NOTES

1. Cr along with a sharp increase in Fe and oil consumption will be associated with plating wear on carbon seal journals.

2. High Si indicates contamination probably due to sampling error.

OIL CAPACITY AND CONSUMPTION INFORMATION AIR FORCE REFERENCE MATERIAL ONLY

T.O. Reference: 1H-1(H)H-2-1, Paragraph 2-82

1. Oil capacity of engine is 3.0 U.S. gallons.

2. Allowable oil consumption rate (quantity per time) is 3 pints per hour.

3. Recommended oil consumption inspection interval (if appropriate for your engine): After every flight during postflight inspection. Limit is 3 pints per hour.

4. Action to take if maximum allowable oil consumption is exceeded: Remove and repair engine at appropriate level maintenance, if not return to Depot.

ENGINE: T55-L-712
AIRCRAFT: (CH-47D/F, MH-47E/G)

JOAP ATOMIC EMISSION ROTRODE

	Fe	Ag	Al	Cr	Cu	Mg	Si	B	Zn
Abnormal Trend (PPM Increase in 10 hrs)	2	2	2	2	2	2	2		
Normal Range	0-4	1	1	1	1	0-5	0-7		
Marginal Range *	5	2	2	2	2	6-7	8-9		
High Range	6	3	3	3	3	8	10-11		
Abnormal	≥7	≥4	≥4	≥4	≥4	≥9	≥12	10	10

Elevated boron (B) and/or zinc (Zn) concentrations usually indicate contamination with another oil type, primarily MIL-PRF-2104. Recommend resampling and retesting immediately. If new value exceeds 8.0 PPM, run check with D19-0 to ensure proper instrument function. When proper function is confirmed, report both results and suspected contamination with MIL-PRF-2104 to chain of command, maintenance chief, cognizant engineering authority (Army and Navy only), and other personnel as specified by local written procedures. Recommend flushing and retesting of contaminated pre-oilers, carts, or other reservoirs where contamination is found until both B and Zn concentrations fall below 8.0 PPM. Refer to JOAP Manual Volume II Section IX, page 9-1 for more information. Recommend segregation of confirmed or suspected contaminated stocks, and submit information (batch no., lot no., MIL-PRF, nature of problem, etc.) on such stocks through the Defense supply deficiency reporting system.

Elevated silicon (Si) concentration usually indicates contamination with soil, sand, or dust. If aluminum (Al) is also elevated, this suggests the presence of clay or soil. Recommend resampling and retesting immediately. If new value exceeds 8.0 PPM, run check with D19-0 to ensure proper instrument function. When proper function is confirmed, report both results and suspected contamination with soil, sand, or dust to chain of command, maintenance chief, cognizant engineering authority (Army and Navy only), and other personnel as specified by local written procedures. Recommend flushing and retesting of contaminated pre-oilers, carts, or other reservoirs where contamination is found until silicon concentration falls below 8.0 PPM. Refer to JOAP Manual Volume II Section IX, page 9-1 for more information. Recommend segregation of confirmed or suspected contaminated stocks, and submit information (batch no., lot no., MIL-PRF, nature of problem, etc.) on such stocks through the Defense supply deficiency reporting system.

ENGINE: T56-A-(ALL SERIES)
AIRCRAFT: (C-130) (E-2C) (E2-C+) (C-2) (P-3)

JOAP ATOMIC EMISSION ROTRODE

	Fe	Ag	Al	Cr	Cu	Mg	B	Si	Zn
Abnormal Trend (PPM Increase in 10 hrs)	10	3	3	3	5	9			
Normal Range	0-35	0-6	0-6	0-6	0-12	0-37			
Marginal Range	36-45	7-9	7	7	13-18	38-48			
High Range	46-54	10-11	8-9	8-9	19-24	49-59			
Abnormal	≥55	≥12	≥10	≥10	≥25	≥60	10	10	10

Elevated boron (B) and/or zinc (Zn) concentrations usually indicate contamination with another oil type, primarily MIL-PRF-2104. Recommend resampling and retesting immediately. If new value exceeds 8.0 PPM, run check with D19-0 to ensure proper instrument function. When proper function is confirmed, report both results and suspected contamination with MIL-PRF-2104 to chain of command, maintenance chief, cognizant engineering authority (Army and Navy only), and other personnel as specified by local written procedures. Recommend flushing and retesting of contaminated pre-oilers, carts, or other reservoirs where contamination is found until both B and Zn concentrations fall below 8.0 PPM. Refer to JOAP Manual Volume II Section IX, page 9-1 for more information. Recommend segregation of confirmed or suspected contaminated stocks, and submit information (batch no., lot no., MIL-PRF, nature of problem, etc.) on such stocks through the Defense supply deficiency reporting system.

Elevated silicon (Si) concentration usually indicates contamination with soil, sand, or dust. If aluminum (Al) is also elevated, this suggests the presence of clay or soil. Recommend resampling and retesting immediately. If new value exceeds 8.0 PPM, run check with D19-0 to ensure proper instrument function. When proper function is confirmed, report both results and suspected contamination with soil, sand, or dust to chain of command, maintenance chief, cognizant engineering authority (Army and Navy only), and other personnel as specified by local written procedures. Recommend flushing and retesting of contaminated pre-oilers, carts, or other reservoirs where contamination is found until silicon concentration falls below 8.0 PPM. Refer to JOAP Manual Volume II Section IX, page 9-1 for more information. Recommend segregation of confirmed or suspected contaminated stocks, and submit information (batch no., lot no., MIL-PRF, nature of problem, etc.) on such stocks through the Defense supply deficiency reporting system.

Caution must be exercised when evaluating this system since the power section and reduction gearbox are lubricated with the same oil supply. Reduction gearbox lube pump failures are usually indicated when Mg increases with some increase in Fe and Cu in combination. Reduction gearbox lube pump should be visually inspected for galling of end plate and pump body. When Fe increase is more than Cu increase, accompanied by moderate increase in Mg and small amount of Cr and Ag, discrepancy is usually with reduction gearbox pinion bearing. When increase in Fe and Mg occur, accompanied by moderate increases in Cu with small amount of Cr and Ag, then discrepancy is usually in one of three components: Power section side gear bearing, accessory case bearing, or reduction gearbox oil pump drive gear bearing. A significant increase in Fe in absence of other wear metals may indicate discrepancy in reduction gear train and/or rear turbine scavenge pump assembly. Dislocation of main drive gear vibration dampener is usually indicated by a rapid increase in Mg with possibly some increase in Fe.

ENGINE: T56-A-(ALL SERIES) (Cont.)
AIRCRAFT: (C-130) (E-2C) (E2-C+) (C-2) (P-3)

Inspection of vibration damper on G56/-7/15 may be accomplished through unused generator drive pad. Inspection on G56-9 requires removal of rear case.

Fe					Main bearing balls/rollers and races Reduction gear assembly gears Accessory drive gears, shafts and splines
Fe	Cu	&	Si		Accessory diffuser scavenge pump
Fe	Cu	&	Si	Mg	Accessory turbine scavenge pump
Fe	Mg				Accessory drive housing
Mg					Reduction gear assembly oil pump
Cu	Mg				Reduction gear assembly oil pump
Cu	Ag	&	Fe	Si	Main bearing cages Reduction gear assembly bearings

NOTES

The T-56 engine has been removed from the oil analysis program by the US Air Force and US Navy. The information above is retained for information purposes.

ENGINE: T58-GE-3/-8/-10
AIRCRAFT: (H-1)

JOAP ATOMIC EMISSION ROTRODE

	Fe	Ag	Al	Cr	Cu	Mg	B	Si	Zn
Abnormal Trend (PPM Increase in 10 hrs)	8	2	4	2	4	3			
Normal Range	0-26	0-2	0-10	0-3	0-10	0-8			
Marginal Range	27-32	N/A	11-12	N/A	11-12	9			
High Range	33-39	3	13-14	4	13-14	10-11			
Abnormal	≥40	≥4	≥15	≥5	≥15	≥12	10	10	10

Elevated boron (B) and/or zinc (Zn) concentrations usually indicate contamination with another oil type, primarily MIL-PRF-2104. Recommend resampling and retesting immediately. If new value exceeds 8.0 PPM, run check with D19-0 to ensure proper instrument function. When proper function is confirmed, report both results and suspected contamination with MIL-PRF-2104 to chain of command, maintenance chief, cognizant engineering authority (Army and Navy only), and other personnel as specified by local written procedures. Recommend flushing and retesting of contaminated pre-oilers, carts, or other reservoirs where contamination is found until both B and Zn concentrations fall below 8.0 PPM. Refer to JOAP Manual Volume II Section IX, page 9-1 for more information. Recommend segregation of confirmed or suspected contaminated stocks, and submit information (batch no., lot no., MIL-PRF, nature of problem, etc.) on such stocks through the Defense supply deficiency reporting system.

Elevated silicon (Si) concentration usually indicates contamination with soil, sand, or dust. If aluminum (Al) is also elevated, this suggests the presence of clay or soil. Recommend resampling and retesting immediately. If new value exceeds 8.0 PPM, run check with D19-0 to ensure proper instrument function. When proper function is confirmed, report both results and suspected contamination with soil, sand, or dust to chain of command, maintenance chief, cognizant engineering authority (Army and Navy only), and other personnel as specified by local written procedures. Recommend flushing and retesting of contaminated pre-oilers, carts, or other reservoirs where contamination is found until silicon concentration falls below 8.0 PPM. Refer to JOAP Manual Volume II Section IX, page 9-1 for more information. Recommend segregation of confirmed or suspected contaminated stocks, and submit information (batch no., lot no., MIL-PRF, nature of problem, etc.) on such stocks through the Defense supply deficiency reporting system.

Fe & Cr	Accessory bearing outer race No. 3 bearing outer race No. 5 bearing outer race
Fe & Cr Ni	Nos. 2 and 4 bearing outer race No. 4 bearing outer race Nos. 2, 4 and 5 bearing outer race
Fe Al & Cr Ni	Power turbine forward seal No. 2 sump forward seal No. 2 sump seals

ENGINE: T58-GE-3/-8/-10 (Cont.)
AIRCRAFT: (H-1)

Al	Lube pump
Cr	No. 1 sump mating ring
Cu	Accessory bearing cages Power turbine right angle drive worm gears
Cu & Ag	Main engine bearing cages No. 3 sump static seal No. 2 sump rear seal
Pb	Speed decreaser gearbox (SDG) forward and aft high speed and idler gear sleeve bearing

ENGINE: T58-GE-16/-400B/-402
AIRCRAFT: (H-3) (H-46)

JOAP ATOMIC EMISSION ROTRODE

	Fe	Ag	Al	Cr	Cu	Ni	Mg	B	Si	Zn
Abnormal Trend (PPM Increase in 10 hrs)	5	2	2	2	2	2				
Normal Range	0-10	0-2	0-3	0-1	0-3	0-2				
Marginal Range	11-13	3-4	4-5	2	4-5	3				
High Range	14-16	5	6	3	6	4				
Abnormal	≥17	≥6	≥7	≥4	≥7	≥5		10	30	10

Elevated boron (B) and/or zinc (Zn) concentrations usually indicate contamination with another oil type, primarily MIL-PRF-2104. Recommend resampling and retesting immediately. If new value exceeds 8.0 PPM, run check with D19-0 to ensure proper instrument function. When proper function is confirmed, report both results and suspected contamination with MIL-PRF-2104 to chain of command, maintenance chief, cognizant engineering authority (Army and Navy only), and other personnel as specified by local written procedures. Recommend flushing and retesting of contaminated pre-oilers, carts, or other reservoirs where contamination is found until both B and Zn concentrations fall below 8.0 PPM. Refer to JOAP Manual Volume II Section IX, page 9-1 for more information. Recommend segregation of confirmed or suspected contaminated stocks, and submit information (batch no., lot no., MIL-PRF, nature of problem, etc.) on such stocks through the Defense supply deficiency reporting system.

Fe & Cr	Accessory bearing outer race No. 3 bearing outer race No. 5 bearing outer race
Fe & Cr Ni	No. 4 bearing outer race
Fe Al & Cr Ni	Power turbine forward seal
Al Lube pump	
Cu	Accessory bearing cages Power turbine right angle drive worm gears
Cu & Ag	Main engine bearing cages No. 3 sump static seal

ENGINE: T58-GE-16/-400B/-402 (Cont.)
AIRCRAFT: (H-3) (H-46)

1. Material compositions for all materials used in oil-wetted areas are outlined the NAVAIR 02B-105AHE-6-1 or NAVAIR 02B-105AHC-6-1 intermediate maintenance manuals. Refer to the intermediate maintenance manuals when any of the critical elements listed in the table above exceed abnormal limits or abnormal trends.

2. Other elements tested for the JOAP, but not listed above are either non-critical, or occur in such minute concentrations within components as to be not detectable without significant increases in critical elements. However, if unusual concentrations of these non-critical elements are found, they may indicate the need to issue a re-sampling request. Operators encountering unusual conditions should contact the cognizant engineering authority for further guidance.

3. A high JOAP zinc (Zn) level without high levels of any other element is a result of Zn from a brazing alloy dissolving into the oil and is not a reason to recommend oil change. However, copper (Cu) and Zn are contained in some accessory bearing cage materials and high levels of these combined elements are indicative of wear. Refer to NAVAIR 02B-105AHE-6-1 or NAVAIR 02B-105AHC-6-1. High Zn levels combined with high sodium (Na), magnesium (Mg) or boron (B) levels indicate oil contamination with petroleum based lubricants such as MIL-PRF-2104, MIL-PRF-21260, or MIL-PRF-2105. If Zn is detected above 25 PPM and Mg, Na or B is above 10 PPM, flush oil system in accordance with the applicable organizational level maintenance manual.

4. High silicon (Si) indicates contamination probably due to sampling error. However, consistently high Si of 30 PPM or more indicates oil system contamination with dirt or sand. In this case, the operator should recommend an oil system drain, flush and filter inspection in accordance with the applicable organizational level maintenance manual and sample after five hours of operation to ensure Si removal.

5. Wear-metal increase of oil sample is not a reason for the oil system to be drained and flushed. Draining and flushing will impede the effectiveness of JOAP sampling by keeping wear metals below abnormal limits and will prevent detection of an impending failure. If an engine requires draining and flushing, particular attention must be paid to the trend of wear metals. If metal concentrations continue to rise after a drain and flush, it is an indication of accelerated internal component wear and not oil system contamination.

ENGINE: T63-A/-700/-720 (ARMY)
AIRCRAFT: (OH-58A/C)

JOAP ATOMIC EMISSION ROTRODE

	Fe	Ag	Al	Cr	Cu	Mg	Si	B	Zn
Abnormal Trend (PPM Increase in 10 hrs)	4	2	3	2	2	4	12		
Normal Range	0-10	0-3	0-8	0-3	0-5	0-10	0-39		
Marginal Range	11-12	N/A	9-10	4	6	11-12	40-48		
High Range	13-15	4	11-12	5	7	13-14	49-59		
Abnormal	≥16	≥5	≥13	≥6	≥8	≥15	≥60	10	10

Fe	Accessory drive splines and gears Bearing load surfaces
Fe & Cu	Accessory bearing assemblies
Fe Cu & Ag	Bearings and gears
Fe & Cu	Oil pump assemblies
Fe & Cu	Housing bearing liners Accessory housing

Elevated boron (B) and/or zinc (Zn) concentrations usually indicate contamination with another oil type, primarily MIL-PRF-2104. Recommend resampling and retesting immediately. If new value exceeds 8.0 ppm, run check with D19-0 to ensure proper instrument function. When proper function is confirmed, report both results and suspected contamination with MIL-PRF-2104 to chain of command, maintenance chief, cognizant engineering authority (Army and Navy only), and other personnel as specified by local written procedures. Recommend flushing and retesting of contaminated pre-oilers, carts, or other reservoirs where contamination is found until both B and Zn concentrations fall below 8.0 ppm. Refer to JOAP Manual Volume II Section IX, page 9-1 for more information. Recommend segregation of confirmed or suspected contaminated stocks, and submit information (batch no., lot no., MIL-PRF, nature of problem, etc.) on such stocks through the Defense supply deficiency reporting system.

NOTES

Some older engines have a Ag cage and failure will show a continuing increase in Fe & Ag instead of Fe Cu & Ag .

High Si will show in the oil samples for the first for second oil changes on a new or overhauled engine.

ENGINE: T64-GE-100/-413/-416/-416A/-416A+/-419
AIRCRAFT: (CH-53D/E) (MH-53E)

JOAP ATOMIC EMISSION ROTRODE

	Fe	Ag	Al	Cr	Cu	Mg	B	Si	Zn
[1]Abnormal Trend (PPM Increase in 10 hrs)	4	2	4	2	3				
Normal Range	0-14	0-2	0-10	0-2	0-6				
Marginal Range	15-17	3	11-12	3	7				
High Range	18-21	4-5	13-15	4	8-9				
Abnormal	≥22	≥6	≥16	≥5	≥10		10	10	10

[1]If the calculated PPM trend value is equal to or greater than the trend PPM value limit, the engine has an abnormal trend.

DO NOT REMOVE ENGINE FOR HIGH SILVER ALONE. IRON AND/OR COPPER SHOULD ALSO BE IN MARGINAL RANGE.

Elevated boron (B) and/or zinc (Zn) concentrations usually indicate contamination with another oil type, primarily MIL-PRF-2104. Recommend resampling and retesting immediately. If new value exceeds 8.0 PPM, run check with D19-0 to ensure proper instrument function. When proper function is confirmed, report both results and suspected contamination with MIL-PRF-2104 to chain of command, maintenance chief, cognizant engineering authority (Army and Navy only), and other personnel as specified by local written procedures. Recommend flushing and retesting of contaminated pre-oilers, carts, or other reservoirs where contamination is found until both B and Zn concentrations fall below 8.0 PPM. Refer to JOAP Manual Volume II Section IX, page 9-1 for more information. Recommend segregation of confirmed or suspected contaminated stocks, and submit information (batch no., lot no., MIL-PRF, nature of problem, etc.) on such stocks through the Defense supply deficiency reporting system.

Elevated silicon (Si) concentration usually indicates contamination with soil, sand, or dust. If aluminum (Al) is also elevated, this suggests the presence of clay or soil. Recommend resampling and retesting immediately. If new value exceeds 8.0 PPM, run check with D19-0 to ensure proper instrument function. When proper function is confirmed, report both results and suspected contamination with soil, sand, or dust to chain of command, maintenance chief, cognizant engineering authority (Army and Navy only), and other personnel as specified by local written procedures. Recommend flushing and retesting of contaminated pre-oilers, carts, or other reservoirs where contamination is found until silicon concentration falls below 8.0 PPM. Refer to JOAP Manual Volume II Section IX, page 9-1 for more information. Recommend segregation of confirmed or suspected contaminated stocks, and submit information (batch no., lot no., MIL-PRF, nature of problem, etc.) on such stocks through the Defense supply deficiency reporting system.

ENGINE: T64-GE-100/-413/-416/-416A/-416A+/-419 (Cont.)
AIRCRAFT: (CH-53D/E) (MH-53E)

Fe	Main bearing balls, rollers and races, accessory gearbox gears and shafts, PTO gears
Fe Ag	Accessory gearbox bearings
Fe Ag	Power turbine shafts
Fe Ag Cu	PTO bearings
Ag Cu	Main bearing cages
Al	Lube and scavenge oil pumps and thermal gradient housing

NOTES

Thermal gradient housing could be prime source of Al especially after heavy use of engine anti-icing system.

OIL CAPACITY AND CONSUMPTION INFORMATION

1. Oil capacity for the MH-53E is 2.8 gallons in the engine oil tank, 2.6 gallons in each cabin auxiliary oil tank.

2. The maximum oil consumption rate is ¾ pint per hour.

ENGINE: T64-P4D
AIRCRAFT: (C-27)

JOAP ATOMIC EMISSION ROTRODE

	Fe	Ag	Al	Cr	Cu	Mg	Na	Ni	Pb	Si	Sn	Ti	B	Mo	Zn	B
[1]Abnormal Trend (PPM Increase in 10 hrs)	4	2	4	2	3	6	4	4	10	10	10	4	4	4	4	
Normal Range	0-14	0-2	0-10	0-2	0-6	0-7	0-6	0-6	0-14	0-14	0-12	0-6	0-6	0-6	0-6	
Marginal Range	15-17	3	11-12	3	7	8	7	7	15-16	15-16	13-14	7	7	7	7	
High Range	18-21	4-5	13-15	4	8-9	9	8	8	17-18	17-18	15-16	8	8	8	8	
Abnormal	≥22	≥6	≥16	≥5	≥10	≥10	≥9	≥9	≥19	≥19	≥17	≥9	≥9	≥9	≥9	10

[1]The value representing the PPM increase is the maximum allowable increase in an interval of 10 hours or less.

Elevated boron (B) and/or zinc (Zn) concentrations usually indicate contamination with another oil type, primarily MIL-PRF-2104. Recommend resampling and retesting immediately. If new value exceeds 8.0 PPM, run check with D19-0 to ensure proper instrument function. When proper function is confirmed, report both results and suspected contamination with MIL-PRF-2104 to chain of command, maintenance chief, cognizant engineering authority (Army and Navy only), and other personnel as specified by local written procedures. Recommend flushing and retesting of contaminated pre-oilers, carts, or other reservoirs where contamination is found until both B and Zn concentrations fall below 8.0 PPM. Refer to JOAP Manual Volume II Section IX, page 9-1 for more information. Recommend segregation of confirmed or suspected contaminated stocks, and submit information (batch no., lot no., MIL-PRF, nature of problem, etc.) on such stocks through the Defense supply deficiency reporting system.

ENGINE: T74-CP-702 (PT6-A-20/-27/-28/-29/-41/-50)
AIRCRAFT: (C-12/C/D) (UV-18) (SDS-30)

JOAP ATOMIC EMISSION ROTRODE

	Fe	Ag	Al	Cr	Cu	Mg	Si	B	Zn
Abnormal Trend (PPM Increase in 10 hrs)	4	2	2	2	3	4	15		
Normal Range	0-10	0-3	0-4	0-3	0-7	0-10	0-49		
Marginal Range	11-12	N/A	5	4	8	11-12	50-60		
High Range	13-14	4	6	5	9-10	13-14	61-74		
Abnormal	≥15	≥5	≥7	≥6	≥11	≥15	≥75	10	10

Fe	Accessory gears and splines Bearings, bearing load surfaces, bearing races
Fe & Cu	Gears and bearing assemblies
Fe & Mg	Housing and bearing liners
Fe Cu & Ag	Main bearing
Fe Cu & Mg	Accessory bushing in housing
Ag	Bearing cages

Elevated boron (B) and/or zinc (Zn) concentrations usually indicate contamination with another oil type, primarily MIL-PRF-2104. Recommend resampling and retesting immediately. If new value exceeds 8.0 PPM, run check with D19-0 to ensure proper instrument function. When proper function is confirmed, report both results and suspected contamination with MIL-PRF-2104 to chain of command, maintenance chief, cognizant engineering authority (Army and Navy only), and other personnel as specified by local written procedures. Recommend flushing and retesting of contaminated pre-oilers, carts, or other reservoirs where contamination is found until both B and Zn concentrations fall below 8.0 PPM. Refer to JOAP Manual Volume II Section IX, page 9-1 for more information. Recommend segregation of confirmed or suspected contaminated stocks, and submit information (batch no., lot no., MIL-PRF, nature of problem, etc.) on such stocks through the Defense supply deficiency reporting system.

NOTES

High Si indicates contamination probably due to sand and dirt or silicon rubber parts. On infrequent occasions it could result from anti-foaming additive.

High Cu & Mg may be due to a bushing problem in the accessory housing.

ENGINE: LTS 101-750A-1/B-2
AIRCRAFT: (HH-65A)

JOAP ATOMIC EMISSION ROTRODE

	Fe	Ag	Al	Cr	Cu	Mg	B	Si	Zn
Abnormal Trend (PPM Increase in 10 hrs)	3	3	3	3	3	3			
Normal Range	0-3	0-2	0-4	0-2	0-2	0-4			
Marginal Range	4	3	5-7	3	3	5-7			
High Range	5	4	8-9	4	4	8-9			
Abnormal	≥6	≥5	≥10	≥5	≥5	≥10	10	10	10

Elevated boron (B) and/or zinc (Zn) concentrations usually indicate contamination with another oil type, primarily MIL-PRF-2104. Recommend resampling and retesting immediately. If new value exceeds 8.0 PPM, run check with D19-0 to ensure proper instrument function. When proper function is confirmed, report both results and suspected contamination with MIL-PRF-2104 to chain of command, maintenance chief, cognizant engineering authority (Army and Navy only), and other personnel as specified by local written procedures. Recommend flushing and retesting of contaminated pre-oilers, carts, or other reservoirs where contamination is found until both B and Zn concentrations fall below 8.0 PPM. Refer to JOAP Manual Volume II Section IX, page 9-1 for more information. Recommend segregation of confirmed or suspected contaminated stocks, and submit information (batch no., lot no., MIL-PRF, nature of problem, etc.) on such stocks through the Defense supply deficiency reporting system.

Elevated silicon (Si) concentration usually indicates contamination with soil, sand, or dust. If aluminum (Al) is also elevated, this suggests the presence of clay or soil. Recommend resampling and retesting immediately. If new value exceeds 8.0 PPM, run check with D19-0 to ensure proper instrument function. When proper function is confirmed, report both results and suspected contamination with soil, sand, or dust to chain of command, maintenance chief, cognizant engineering authority (Army and Navy only), and other personnel as specified by local written procedures. Recommend flushing and retesting of contaminated pre-oilers, carts, or other reservoirs where contamination is found until silicon concentration falls below 8.0 PPM. Refer to JOAP Manual Volume II Section IX, page 9-1 for more information. Recommend segregation of confirmed or suspected contaminated stocks, and submit information (batch no., lot no., MIL-PRF, nature of problem, etc.) on such stocks through the Defense supply deficiency reporting system.

NOTES

Viscosity: Change oil if viscosity changes more than plus 25% or minus 10% of new oil viscosity

Water Limit: 0.100% or 1000 PPM

ENGINE: LTS 101-750A-1/B-2 (Cont.)
AIRCRAFT: (HH-65A)

Fe	Gears, bearings, bearing liners, oil pump or major support structures
Ag	Bearing cages
Al	Gearbox or inlet housing
Cr	Power turbine shaft
Cu	Bearing cages, oil pump

ENGINE: T400-CP-400/-401, T400-WV-402 (NAVY)
AIRCRAFT: (AH-1J) (UH-1N) (AH-1T) (VH-1N)

JOAP ATOMIC EMISSION ROTRODE

	Fe	Ag	Al	Cr	Cu	Mg	B	Si	Zn
Abnormal Trend (PPM Increase in 10 hrs)	4	3	3	2	2	2			
Normal Range	0-10	0-2	0-6	0-2	0-5	0-3			
Marginal Range	11-12	3-5	7	N/A	6	4			
High Range	13-14	6-7	8-9	3	7	5			
Abnormal	≥15	≥8	≥10	≥4	≥8	≥6	10	10	10

Increases in Fe and Ag may be indicative of discrepancy in No. 5 bearing area if sample is taken from power section oil system. Increases in Fe in the third oil system may indicate a discrepancy in the clutch area.

Elevated boron (B) and/or zinc (Zn) concentrations usually indicate contamination with another oil type, primarily MIL-PRF-2104. Recommend resampling and retesting immediately. If new value exceeds 8.0 PPM, run check with D19-0 to ensure proper instrument function. When proper function is confirmed, report both results and suspected contamination with MIL-PRF-2104 to chain of command, maintenance chief, cognizant engineering authority (Army and Navy only), and other personnel as specified by local written procedures. Recommend flushing and retesting of contaminated pre-oilers, carts, or other reservoirs where contamination is found until both B and Zn concentrations fall below 8.0 PPM. Refer to JOAP Manual Volume II Section IX, page 9-1 for more information. Recommend segregation of confirmed or suspected contaminated stocks, and submit information (batch no., lot no., MIL-PRF, nature of problem, etc.) on such stocks through the Defense supply deficiency reporting system.

Elevated silicon (Si) concentration usually indicates contamination with soil, sand, or dust. If aluminum (Al) is also elevated, this suggests the presence of clay or soil. Recommend resampling and retesting immediately. If new value exceeds 8.0 PPM, run check with D19-0 to ensure proper instrument function. When proper function is confirmed, report both results and suspected contamination with soil, sand, or dust to chain of command, maintenance chief, cognizant engineering authority (Army and Navy only), and other personnel as specified by local written procedures. Recommend flushing and retesting of contaminated pre-oilers, carts, or other reservoirs where contamination is found until silicon concentration falls below 8.0 PPM. Refer to JOAP Manual Volume II Section IX, page 9-1 for more information. Recommend segregation of confirmed or suspected contaminated stocks, and submit information (batch no., lot no., MIL-PRF, nature of problem, etc.) on such stocks through the Defense supply deficiency reporting system.

Fe	Cr	Power turbine rotor shaft, Nos. 1, 2, 3, and 4 bearing balls, rollers and races, compressor shaft, compressor air/oil seal, accessory gearbox bearing balls, rollers and races, reduction gearbox bearing balls, rollers and races.
Fe	Ni	Power turbine rotor shaft, compressor rotor shaft, air rotor seal, No. 1 bearing cage.

ENGINE: T400-CP-400/-401, T400-WV-402 (NAVY) (Cont.)
AIRCRAFT: (AH-1J) (UH-1N) (AH-1T) (VH-1N)

Fe	Ni	Cr			Accessory gearbox gears and shafts, accessory gearbox oil pump gears and shafts, reduction gearbox gears and shafts, reduction gearbox oil pump gears and shafts.
Al	Cu	Mg	Si		Accessory gearbox housings, accessory gearbox oil pump housings, reduction gearbox housings, reduction gearbox oil pump housing and cover.
Cu	Si	Zn	Fe	Ag	Nos. 2, 3, and 4 bearing cages, accessory gearbox bearing cages, reduction gearbox bearing cages.
Al	Si	Ni	Cu		Reduction gearbox sleeve bearings.
Al	Cu	Mg			Reduction gearbox carrier oil seals.

ENGINE: T400-CP-400 (AIR FORCE)
AIRCRAFT: (UH-1N)

JOAP ATOMIC EMISSION ROTRODE

	Fe	Ag	Al	Cr	Cu	Mg	B	Si	Zn
[1]Abnormal Trend (PPM Increase in 10 hrs)	4	3	3	2	2	2			
Normal Range	0-2	0	0	0	0	0			
Marginal Range	3-5	N/A	1	N/A	1	1			
High Range	6-14	1-7	2-9	1-3	2-7	2-5			
Abnormal	≥15	≥8	≥10	≥4	≥8	≥6	10	10	10

[1]If the calculated PPM trend value is equal to or greater than the trend PPM value limit, the engine has an abnormal trend.

Increases in Fe and Ag may be indicative of discrepancy in No. 5 bearing area if sample is taken from power section oil system. Increases in Fe in the third oil system may indicate a discrepancy in the clutch area.

Elevated boron (B) and/or zinc (Zn) concentrations usually indicate contamination with another oil type, primarily MIL-PRF-2104. Recommend resampling and retesting immediately. If new value exceeds 8.0 PPM, run check with D19-0 to ensure proper instrument function. When proper function is confirmed, report both results and suspected contamination with MIL-PRF-2104 to chain of command, maintenance chief, cognizant engineering authority (Army and Navy only), and other personnel as specified by local written procedures. Recommend flushing and retesting of contaminated pre-oilers, carts, or other reservoirs where contamination is found until both B and Zn concentrations fall below 8.0 PPM. Refer to JOAP Manual Volume II Section IX, page 9-1 for more information. Recommend segregation of confirmed or suspected contaminated stocks, and submit information (batch no., lot no., MIL-PRF, nature of problem, etc.) on such stocks through the Defense supply deficiency reporting system.

Elevated silicon (Si) concentration usually indicates contamination with soil, sand, or dust. If aluminum (Al) is also elevated, this suggests the presence of clay or soil. Recommend resampling and retesting immediately. If new value exceeds 8.0 PPM, run check with D19-0 to ensure proper instrument function. When proper function is confirmed, report both results and suspected contamination with soil, sand, or dust to chain of command, maintenance chief, cognizant engineering authority (Army and Navy only), and other personnel as specified by local written procedures. Recommend flushing and retesting of contaminated pre-oilers, carts, or other reservoirs where contamination is found until silicon concentration falls below 8.0 PPM. Refer to JOAP Manual Volume II Section IX, page 9-1 for more information. Recommend segregation of confirmed or suspected contaminated stocks, and submit information (batch no., lot no., MIL-PRF, nature of problem, etc.) on such stocks through the Defense supply deficiency reporting system.

Fe Cr — Power turbine rotor shaft, Nos. 1, 2, 3, and 4 bearing balls, rollers and races, compressor shaft, compressor air/oil seal, accessory gearbox bearing balls, rollers and races, reduction gearbox bearing balls, rollers and races.

ENGINE: T400-CP-400 (AIR FORCE) (Cont.)
AIRCRAFT: (UH-1N)

Fe	Ni				Power turbine rotor shaft, compressor rotor shaft, air rotor seal, No. 1 bearing cage
Fe	Ni	Cr			Accessory gearbox gears and shafts, accessory gearbox oil pump gears and shafts, reduction gearbox gears and shafts, reduction gearbox oil pump gears and shafts.
Fe	Cu	Mg	Si		Accessory gearbox housings, accessory gearbox oil pump housings, reduction gearbox housings, reduction gearbox oil pump housing and cover.
Cu	Si	Zn	Fe	Ag	Nos. 2, 3, and 4 bearing cages, accessory gearbox bearing cages, reduction gearbox bearing cages.
Al	Si	Ni	Cu		Reduction gearbox sleeve bearings.
Al	Cu	Mg			Reduction gearbox carrier oil seals

OIL CAPACITY AND CONSUMPTION INFORMATION REFERENCE MATERIAL ONLY

T.O. Reference: 2J-T400-6-1, Section I, Page 1-2, 1H-1(U)N-2-2 Troubleshooting Procedures

1. Oil Capacity of one power section: 6.4 quarts. Oil capacity of reduction gearbox: 5.0 quarts.

2. Allowable oil consumption rate is one ounce per hour.

3. Recommended oil consumption inspection interval (if appropriate for your engine) is after every flight.

4. Action to take if maximum oil consumption rate is exceeded: Perform troubleshooting procedures in T.O. 1H-1(U)N-2-2 to isolate problem and take corrective action.

ENGINE: MK529-8X (NASA)
AIRCRAFT: (G-159)

JOAP ATOMIC EMISSION ROTRODE

	Fe	Ag	Al	Cr	Cu	Mg	B	Si	Zn
Abnormal Trend (PPM Increase in 10 hrs)	4		4		3	4			
Normal Range	0-13		0-10		0-6	0-10			
Marginal Range	14-16		11-12		7	11-12			
High Range	17-19		13-14		8-9	13-14			
Abnormal	≥20		≥15		≥10	≥15	10	10	10

Elevated boron (B) and/or zinc (Zn) concentrations usually indicate contamination with another oil type, primarily MIL-PRF-2104. Recommend resampling and retesting immediately. If new value exceeds 8.0 PPM, run check with D19-0 to ensure proper instrument function. When proper function is confirmed, report both results and suspected contamination with MIL-PRF-2104 to chain of command, maintenance chief, cognizant engineering authority (Army and Navy only), and other personnel as specified by local written procedures. Recommend flushing and retesting of contaminated pre-oilers, carts, or other reservoirs where contamination is found until both B and Zn concentrations fall below 8.0 PPM. Refer to JOAP Manual Volume II Section IX, page 9-1 for more information. Recommend segregation of confirmed or suspected contaminated stocks, and submit information (batch no., lot no., MIL-PRF, nature of problem, etc.) on such stocks through the Defense supply deficiency reporting system.

Elevated silicon (Si) concentration usually indicates contamination with soil, sand, or dust. If aluminum (Al) is also elevated, this suggests the presence of clay or soil. Recommend resampling and retesting immediately. If new value exceeds 8.0 PPM, run check with D19-0 to ensure proper instrument function. When proper function is confirmed, report both results and suspected contamination with soil, sand, or dust to chain of command, maintenance chief, cognizant engineering authority (Army and Navy only), and other personnel as specified by local written procedures. Recommend flushing and retesting of contaminated pre-oilers, carts, or other reservoirs where contamination is found until silicon concentration falls below 8.0 PPM. Refer to JOAP Manual Volume II Section IX, page 9-1 for more information. Recommend segregation of confirmed or suspected contaminated stocks, and submit information (batch no., lot no., MIL-PRF, nature of problem, etc.) on such stocks through the Defense supply deficiency reporting system.

ENGINE: AE2100D3 (NAVY AND MARINES)
AIRCRAFT: KC-130J

The AE2100D3 oil system consists of an oil tank, power unit lube and scavenge pump, pressure and scavenge filter unit, air oil separator, air-cooled oil cooler, oil cooler augmentation, fuel-cooled oil cooler, propeller gearbox (PGB) pump and filter assembly, high pressure pump and overspeed governor unit (OSG), propeller pitch control unit, propeller auxiliary feather pump, the PGB sump, and the three engine sumps. This system uses four separate three-micron filters for filtration of the oil as follows:

(1) One filter for engine lube oil.
(2) One filter for the PGB lube and propeller supply oil.
(3) Two filters for the scavenged oil.

Based on the filtration design, RCM analysis and recommendations from oil analysis experts in NAVAIR 4.4, JOAP analysis has been determined to be an ineffective preventative maintenance task for the engine.

The engine filtration system consists of the pressure and scavenge filter unit. It houses the power section pressure oil filter and two scavenge oil filters. The scavenge oil filters operate in parallel. The filters have mechanical and electrical dirty filter indicators. The propeller gearbox lube and scavenge pump houses the propeller gearbox filter and associated indicators. The filter elements are rated at three microns absolute. This design effectively cleanses the AE2100D3 engine oil system lubricant of contaminant during normal operations.

Should preservation requirements/inspections warrant it, or it is believed that the oil system has absorbed water due to operational influences; oil samples shall be taken and analyzed for water content. Water limits are 1000 PPM or 0.1 percent. If the water content is exceeded, the oil system shall be drained and flushed and a penalty run performed.

ENGINE: AE1107C
AIRCRAFT: MV-22, CV-22

The AE1107C oil system consists of a lube and scavenge pump assembly, oil tank, air oil separator, oil conditioning unit, and the three engine sumps. This system uses a three-micron filter for filtration of the engine oil. Based on the filtration design, RCM analysis and recommendations from oil analysis experts in NAVAIR 4.4, JOAP analysis has been determined to be an ineffective preventative maintenance task for the engine.

The current filtration system consists of an anodized cast aluminum filter manifold, which houses a filter bypass valve and provides ports for the lube inlet and outlet. The filter unit is an integral part of the oil-conditioning unit. The filter element is a disposable pleated paper unit rated at three microns absolute, and is sized to hold 24 grams of contaminant. Oil is supplied from the engine mounted oil tank and pumped through the filter by the oil lube element of the oil lube and scavenge pump. This design effectively cleanses the AE1107C engine oil system lubricant of contaminant during normal operations.

Should preservation requirements/inspections warrant it, or it is believed that the oil system has absorbed water due to operational influences; oil samples shall be taken and analyzed for water content. Water limits are 1000 PPM or 0.100 percent. If the water content is exceeded, the oil system shall be drained and flushed and a penalty run performed.

ENGINE: TF30-P-414A (NAVY)
AIRCRAFT: (F-14A)

JOAP ATOMIC EMISSION ROTRODE

	Fe	Ag	Al	Cr	Cu	Mg	Ni	Ti	B	Si	Zn
Abnormal Trend (PPM Increase in 10 hrs)	4		3	3	3	4	3	4			
Normal Range	0-16		6	0-3	0-6	0-16	0-6	0-11			
Marginal Range	17-20		7-8	4	7	17-20	7	12-13			
High Range	21-24		9	5	8-9	21-24	8-10	14-16			
Abnormal	≥25		≥10	≥6	≥10	≥2	≥11	≥17	10	10	10

Teardown evaluations have identified the following areas to be most probable cause for certain wear metal indicators: Fe-main engine bearings, Mg-main gearbox, Ti-No. 2 bearing housing. Ag, Pb, Cu, Si individually are not cause for engine removal.

Elevated boron (B) and/or zinc (Zn) concentrations usually indicate contamination with another oil type, primarily MIL-PRF-2104. Recommend resampling and retesting immediately. If new value exceeds 8.0 PPM, run check with D19-0 to ensure proper instrument function. When proper function is confirmed, report both results and suspected contamination with MIL-PRF-2104 to chain of command, maintenance chief, cognizant engineering authority (Army and Navy only), and other personnel as specified by local written procedures. Recommend flushing and retesting of contaminated pre-oilers, carts, or other reservoirs where contamination is found until both B and Zn concentrations fall below 8.0 PPM. Refer to JOAP Manual Volume II Section IX, page 9-1 for more information. Recommend segregation of confirmed or suspected contaminated stocks, and submit information (batch no., lot no., MIL-PRF, nature of problem, etc.) on such stocks through the Defense supply deficiency reporting system.

Elevated silicon (Si) concentration usually indicates contamination with soil, sand, or dust. If aluminum (Al) is also elevated, this suggests the presence of clay or soil. Recommend resampling and retesting immediately. If new value exceeds 8.0 PPM, run check with D19-0 to ensure proper instrument function. When proper function is confirmed, report both results and suspected contamination with soil, sand, or dust to chain of command, maintenance chief, cognizant engineering authority (Army and Navy only), and other personnel as specified by local written procedures. Recommend flushing and retesting of contaminated pre-oilers, carts, or other reservoirs where contamination is found until silicon concentration falls below 8.0 PPM. Refer to JOAP Manual Volume II Section IX, page 9-1 for more information. Recommend segregation of confirmed or suspected contaminated stocks, and submit information (batch no., lot no., MIL-PRF, nature of problem, etc.) on such stocks through the Defense supply deficiency reporting system.

ENGINE: TF30-P-414A (NAVY) (Cont.)
AIRCRAFT: (F-14A)

NOTES

Trend analysis is the best evaluation of engine condition. It is recommended that lab results be plotted on graphs to assist in evaluations. Engines which show no abnormal trend may reach the abnormal range until removal is recommended. Engines which show abnormal trend should be resampled for verification ASAP and evaluated using "Decision Making Guidance" table. Trend should always be based on PPM increase per 10 hour interval. Samples which show a significant drop in all wear metal (negative trend) should be resampled for verification ASAP and if confirmed a new oil baseline established by sampling every 5 hours for next 3 samples. Trend analysis done with less than 5 hours between samples are subject to error because the spectrometer tolerance of 1 PPM is averaged in the shorter time interval. Flushing oil system will not be accomplished unless an external contamination source can be identified.

Fe	Main bearing ball/roller, races; Pump gears; Accessory drive shaft; Gearbox gears shaft and splines
Ag Cu	Main, accessory, gearbox bearing cages
Al	Gearbox oil pump housing; Nos. 4 and 5 scavenge pump housing
Fe Cr	Nos. 2, 3, and 4 bearing seal plates
Mg	No. 1 bearing housing; Gearbox housing
Ti	Nos. 2 and 3 bearing support housing
Ti & Fe Cr Mo V	Fan forward shaft spline wear or No. 1 or No. 2 bearing loose or fan forward shaft
Ni	Nos. 4½ and 5 bearing seal liner No. 5 bearing compression springs

ENGINE: TF33-P-3/-103, TF33-P11A (WP57F) (NASA)
AIRCRAFT: (B-52)

JOAP ATOMIC EMISSION ROTRODE

	Fe	Ag	Al	Cr	Cu	Mg	Ti	B	Si	Zn
[1]Abnormal Trend (PPM Increase in 10 hrs)	8	2	2	3	2	5	3			
Normal Range	0-3	0	0-2	0	0-1	0-1	0-2			
Marginal Range	4-9	N/A	3	1	2	2	3			
High Range	10-24	1	4	2	3	3	4			
Abnormal	≥25	≥2	≥5	≥3	≥4	≥4	≥5	10	10	10

[1]If the calculated PPM trend value is equal to or greater than the trend PPM value limit, the engine has an abnormal trend.

Sudden increase in Mg indicates discrepancy in the accessory gearbox. All bearing journals except those that are titanium may be chrome plated during rework. Increases in titanium indicate bearing inner race turning on journal or hub.

Elevated boron (B) and/or zinc (Zn) concentrations usually indicate contamination with another oil type, primarily MIL-PRF-2104. Recommend resampling and retesting immediately. If new value exceeds 8.0 PPM, run check with D19-0 to ensure proper instrument function. When proper function is confirmed, report both results and suspected contamination with MIL-PRF-2104 to chain of command, maintenance chief, cognizant engineering authority (Army and Navy only), and other personnel as specified by local written procedures. Recommend flushing and retesting of contaminated pre-oilers, carts, or other reservoirs where contamination is found until both B and Zn concentrations fall below 8.0 PPM. Refer to JOAP Manual Volume II Section IX, page 9-1 for more information. Recommend segregation of confirmed or suspected contaminated stocks, and submit information (batch no., lot no., MIL-PRF, nature of problem, etc.) on such stocks through the Defense supply deficiency reporting system.

Elevated silicon (Si) concentration usually indicates contamination with soil, sand, or dust. If aluminum (Al) is also elevated, this suggests the presence of clay or soil. Recommend resampling and retesting immediately. If new value exceeds 8.0 PPM, run check with D19-0 to ensure proper instrument function. When proper function is confirmed, report both results and suspected contamination with soil, sand, or dust to chain of command, maintenance chief, cognizant engineering authority (Army and Navy only), and other personnel as specified by local written procedures. Recommend flushing and retesting of contaminated pre-oilers, carts, or other reservoirs where contamination is found until silicon concentration falls below 8.0 PPM. Refer to JOAP Manual Volume II Section IX, page 9-1 for more information. Recommend segregation of confirmed or suspected contaminated stocks, and submit information (batch no., lot no., MIL-PRF, nature of problem, etc.) on such stocks through the Defense supply deficiency reporting system.

ENGINE: TF33-P-3/-103, TF33-P11A (WP57F) (NASA) (Cont.)
AIRCRAFT: (B-52)

NOTES

TF33 engines that have experienced a rise in magnesium only may be returned to service after accomplishing the following procedures:

1. Establish that magnesium is the only metal that is experiencing an increase (Si does not apply to this). Most likely cause is oil relief valve rubbing. Shim is available to stop valve contact to eliminate the need for the following, recurring drain and flush.

2. Drain all oil (main) from the engine.

3. Inspect oil filter and sump screen for contaminants.

4. Inspect the front gearbox assembly (front door) for any signs of abnormal wear.

5. If the above procedures check ok, then fill the engine with oil and perform a run to reestablish the baseline.

6. Take a JOAP sample and if limits fall within parameters, the engine may be returned to service.

7. A follow-up JOAP must be taken after the first five hours of engine operation.

8. Follow any command guidance in reporting high magnesium occurrence.

Fe	Main bearing ball/roller, races, seals and housing Front and main accessory drive gears Main gearbox gears
Fe Al	Front accessory drive and main gearbox oil pumps
Fe Ag	Main accessory drive gearings No. 2½ bearing cages
Fe Ag Cu & Si Sn	Main gearbox bearings
Ag Cu & Si Sn	Nos. 1, 2, 3, 4, 4½, 5 and 6 bearing cages
Mg	Main accessory drive housing
Ti	Nos. 1 and 3 bearing hub

All bearing journals except titanium may be chrome plated during overhaul.

ENGINE: TF33-PW-102, JT3D-3B
AIRCRAFT: (C-18) (C-135) (C-137) (E-8)

JOAP ATOMIC EMISSION ROTRODE

	Fe	Ag	Al	Cr	Cu	Mg	Ti	B	Si	Zn
[1]Abnormal Trend (PPM Increase in 10 hrs)	4	2	2	3	2	2	3			
Normal Range	0-2	0-1	0-1	0-1	0-1	0-1	0-2			
Marginal Range	3-9	N/A	2-3	2	2	2	3			
High Range	10-24	2	4	3	3	3	4			
Abnormal	≥25	≥3	≥5	≥4	≥4	≥4	≥5	10	10	10

[1]If the calculated PPM trend value is equal to or greater than the trend PPM value limit, the engine has an abnormal trend.

Sudden increase in Mg indicates discrepancy in the accessory gearbox. All bearing journals except those that are titanium may be chrome plated during rework. Increases in titanium indicate bearing inner race turning on journal or hub.

Elevated boron (B) and/or zinc (Zn) concentrations usually indicate contamination with another oil type, primarily MIL-PRF-2104. Recommend resampling and retesting immediately. If new value exceeds 8.0 PPM, run check with D19-0 to ensure proper instrument function. When proper function is confirmed, report both results and suspected contamination with MIL-PRF-2104 to chain of command, maintenance chief, cognizant engineering authority (Army and Navy only), and other personnel as specified by local written procedures. Recommend flushing and retesting of contaminated pre-oilers, carts, or other reservoirs where contamination is found until both B and Zn concentrations fall below 8.0 PPM. Refer to JOAP Manual Volume II Section IX, page 9-1 for more information. Recommend segregation of confirmed or suspected contaminated stocks, and submit information (batch no., lot no., MIL-PRF, nature of problem, etc.) on such stocks through the Defense supply deficiency reporting system.

Elevated silicon (Si) concentration usually indicates contamination with soil, sand, or dust. If aluminum (Al) is also elevated, this suggests the presence of clay or soil. Recommend resampling and retesting immediately. If new value exceeds 8.0 PPM, run check with D19-0 to ensure proper instrument function. When proper function is confirmed, report both results and suspected contamination with soil, sand, or dust to chain of command, maintenance chief, cognizant engineering authority (Army and Navy only), and other personnel as specified by local written procedures. Recommend flushing and retesting of contaminated pre-oilers, carts, or other reservoirs where contamination is found until silicon concentration falls below 8.0 PPM. Refer to JOAP Manual Volume II Section IX, page 9-1 for more information. Recommend segregation of confirmed or suspected contaminated stocks, and submit information (batch no., lot no., MIL-PRF, nature of problem, etc.) on such stocks through the Defense supply deficiency reporting system.

ENGINE: TF33-PW-102, JT3D-3B (Cont.)
AIRCRAFT: (C-18) (C-135) (C-137) (E-8)

NOTES

TF33 engines that have experienced a rise in magnesium only may be returned to service after accomplishing the following procedures:

1. Establish that magnesium is the only metal that is experiencing an increase (Si does not apply to this). Most likely cause is oil relief valve rubbing. Shim is available to stop valve contact to eliminate the need for the following, recurring drain and flush.

2. Drain all oil (main) from the engine.

3. Inspect oil filter and sump screen for contaminants.

4. Inspect the front gearbox assembly (front door) for any signs of abnormal wear.

5. If the above procedures check ok, then fill the engine with oil and perform a run to reestablish the baseline.

6. Take a JOAP sample and if limits fall within parameters, the engine may be returned to service.

7. A follow-up JOAP must be taken after the first five hours of engine operation.

8. Follow any command guidance in reporting high magnesium occurrence.

Fe	Main bearing ball/roller, races, seals and housing Front and main accessory drive gears Main gearbox gears
Fe Al	Front accessory drive and main gearbox oil pumps
Fe Ag	Main accessory drive gearings No. 2½ bearing cages
Fe Ag Cu & Si Sn	Main gearbox bearings
Ag Cu & Si Sn	Nos. 1, 2, 3, 4, 4½, 5 and 6 bearing cages
Mg	Main accessory drive housing
Ti	Nos. 1 and 3 bearing hub

All bearing journals except titanium may be chrome plated during overhaul.

ENGINE: TF33-P-5/-9
AIRCRAFT: (C-135)

JOAP ATOMIC EMISSION ROTRODE

	Fe	Ag	Al	Cr	Cu	Mg	Ti	B	Si	Zn
[1]Abnormal Trend (PPM Increase in 10 hrs)	8	2	2	3	2	5	3			
Normal Range	0-19	0-1	0-1	0-5	0-1	0-5	0-2			
Marginal Range	20-37	N/A	2-5	6-7	2	6-18	3-4			
High Range	38-49	2	6	8-9	3	19	5			
Abnormal	≥50	≥3	≥7	≥10	≥4	≥20	≥6	10	10	10

[1]If the calculated PPM trend value is equal to or greater than the trend PPM value limit, the engine has an abnormal trend.

Sudden increase in Mg indicates discrepancy in the accessory gearbox. All bearing journals except those that are titanium may be chrome plated during rework. Increases in titanium indicate bearing inner race turning on journal or hub.

Elevated boron (B) and/or zinc (Zn) concentrations usually indicate contamination with another oil type, primarily MIL-PRF-2104. Recommend resampling and retesting immediately. If new value exceeds 8.0 PPM, run check with D19-0 to ensure proper instrument function. When proper function is confirmed, report both results and suspected contamination with MIL-PRF-2104 to chain of command, maintenance chief, cognizant engineering authority (Army and Navy only), and other personnel as specified by local written procedures. Recommend flushing and retesting of contaminated pre-oilers, carts, or other reservoirs where contamination is found until both B and Zn concentrations fall below 8.0 PPM. Refer to JOAP Manual Volume II Section IX, page 9-1 for more information. Recommend segregation of confirmed or suspected contaminated stocks, and submit information (batch no., lot no., MIL-PRF, nature of problem, etc.) on such stocks through the Defense supply deficiency reporting system.

Elevated silicon (Si) concentration usually indicates contamination with soil, sand, or dust. If aluminum (Al) is also elevated, this suggests the presence of clay or soil. Recommend resampling and retesting immediately. If new value exceeds 8.0 PPM, run check with D19-0 to ensure proper instrument function. When proper function is confirmed, report both results and suspected contamination with soil, sand, or dust to chain of command, maintenance chief, cognizant engineering authority (Army and Navy only), and other personnel as specified by local written procedures. Recommend flushing and retesting of contaminated pre-oilers, carts, or other reservoirs where contamination is found until silicon concentration falls below 8.0 PPM. Refer to JOAP Manual Volume II Section IX, page 9-1 for more information. Recommend segregation of confirmed or suspected contaminated stocks, and submit information (batch no., lot no., MIL-PRF, nature of problem, etc.) on such stocks through the Defense supply deficiency reporting system.

ENGINE: TF33-P-5/-9 (Cont.)
AIRCRAFT: (C-135)

NOTES

TF33 engines that have experienced a rise in magnesium only may be returned to service after accomplishing the following procedures:

1. Establish that magnesium is the only metal that is experiencing an increase (Si does not apply to this). Most likely cause is oil relief valve rubbing. Shim is available to stop valve contact to eliminate the need for the following, recurring drain and flush.

2. Drain all oil (main) from the engine.

3. Inspect oil filter and sump screen for contaminants.

4. Inspect the front gearbox assembly (front door) for any signs of abnormal wear.

5. If the above procedures check ok, then fill the engine with oil and perform a run to reestablish the baseline.

6. Take a JOAP sample and if limits fall within parameters, the engine may be returned to service.

7. A follow-up JOAP must be taken after the first five hours of engine operation.

8. Follow any command guidance in reporting high magnesium occurrence.

ENGINE: TF33-P-5/-9 (Cont.)
AIRCRAFT: (C-135)

Fe	Main bearing ball/roller, races; seals and housing Front and main accessory drive gears Main gearbox gears
Fe Al	Front accessory drive and main gearbox oil pumps
Fe Ag	Main accessory drive gearings No. 2½ bearing cages
Fe Ag Cu & Si Sn	Main gearbox bearings
Ag Cu & Si Sn	Nos. 1, 2, 3, 4, 4½, 5 and 6 bearing cages
Mg	Main accessory drive housing
Ti	Nos. 1 and 3 bearing hub

All bearing journals except titanium may be chrome plated during overhaul.

ENGINE: TF33-P-7
AIRCRAFT: (C-141)

JOAP ATOMIC EMISSION ROTRODE

	Fe	Ag	Al	Cr	Cu	Mg	Ti	B	Si	Zn
[1]Abnormal Trend (PPM Increase in 10 hrs)	6	2	2	2	2	4	3			
Normal Range	0-8	0-1	0-1	0-1	0-1	0-4	0-2			
Marginal Range	9-21	N/A	2-3	2-3	2-3	5-6	3-4			
High Range	22-31	2	4	4	4	7	5			
Abnormal	≥32	≥3	≥5	≥5	≥5	≥8	≥6	10	10	10

[1]If the calculated PPM trend value is equal to or greater than the trend PPM value limit, the engine has an abnormal trend.

Sudden increase in Mg indicates discrepancy in the accessory gearbox. All bearing journals except those that are titanium may be chrome plated during rework. Increases in titanium indicate bearing inner race turning on journal or hub.

Elevated boron (B) and/or zinc (Zn) concentrations usually indicate contamination with another oil type, primarily MIL-PRF-2104. Recommend resampling and retesting immediately. If new value exceeds 8.0 PPM, run check with D19-0 to ensure proper instrument function. When proper function is confirmed, report both results and suspected contamination with MIL-PRF-2104 to chain of command, maintenance chief, cognizant engineering authority (Army and Navy only), and other personnel as specified by local written procedures. Recommend flushing and retesting of contaminated pre-oilers, carts, or other reservoirs where contamination is found until both B and Zn concentrations fall below 8.0 PPM. Refer to JOAP Manual Volume II Section IX, page 9-1 for more information. Recommend segregation of confirmed or suspected contaminated stocks, and submit information (batch no., lot no., MIL-PRF, nature of problem, etc.) on such stocks through the Defense supply deficiency reporting system.

Elevated silicon (Si) concentration usually indicates contamination with soil, sand, or dust. If aluminum (Al) is also elevated, this suggests the presence of clay or soil. Recommend resampling and retesting immediately. If new value exceeds 8.0 PPM, run check with D19-0 to ensure proper instrument function. When proper function is confirmed, report both results and suspected contamination with soil, sand, or dust to chain of command, maintenance chief, cognizant engineering authority (Army and Navy only), and other personnel as specified by local written procedures. Recommend flushing and retesting of contaminated pre-oilers, carts, or other reservoirs where contamination is found until silicon concentration falls below 8.0 PPM. Refer to JOAP Manual Volume II Section IX, page 9-1 for more information. Recommend segregation of confirmed or suspected contaminated stocks, and submit information (batch no., lot no., MIL-PRF, nature of problem, etc.) on such stocks through the Defense supply deficiency reporting system.

ENGINE: TF33-P-7 (Cont.)
AIRCRAFT: (C-141)

NOTES

TF33 engines that have experienced a rise in magnesium only may be returned to service after accomplishing the following procedures:

1. Establish that magnesium is the only metal that is experiencing an increase (Si does not apply to this). Most likely cause is oil relief valve rubbing. Shim is available to stop valve contact to eliminate the need for the following, recurring drain and flush.

2. Drain all oil (main) from the engine.

3. Inspect oil filter and sump screen for contaminants.

4. Inspect the front gearbox assembly (front door) for any signs of abnormal wear.

5. If the above procedures check ok, then fill the engine with oil and perform a run to reestablish the baseline.

6. Take a JOAP sample and if limits fall within parameters, the engine may be returned to service.

7. A follow-up JOAP must be taken after the first five hours of engine operation.

8. Follow any command guidance in reporting high magnesium occurrence.

Fe	Main bearing ball/roller, races; seals and housing Front and main accessory drive gears Main gearbox gears
Fe Al	Front accessory drive and main gearbox oil pumps
Fe Ag	Main accessory drive gearings No. 2½ bearing cages
Fe Ag Cu & Si Sn	Main gearbox bearings
Ag Cu & Si Sn	Nos. 1, 2, 3, 4, 4½, 5 and 6 bearing cages
Mg	Main accessory drive housing
Ti	Nos. 1 and 3 bearing hub

All bearing journals except titanium may be chrome plated during overhaul.

ENGINE: TF33-P-100
AIRCRAFT: (E-3A)

JOAP ATOMIC EMISSION ROTRODE

	Fe	Ag	Al	Cr	Cu	Mg	Ti	B	Si	Zn
[1]Abnormal Trend (PPM Increase in 10 hrs)	6	2	2	2	2	4	3			
Normal Range	0-3	0	0	0	0-1	0-4	0-2			
Marginal Range	4-9	1	N/A	1	2	5-6	3			
High Range	10-22	2	1	2	3	7	4			
Abnormal	≥23	≥3	≥2	≥3	≥4	≥8	≥5	10	10	10

[1]If the calculated PPM trend value is equal to or greater than the trend PPM value limit, the engine has an abnormal trend.

Sudden increase in Mg indicates discrepancy in the accessory gearbox. All bearing journals except those that are titanium may be chrome plated during rework. Increases in titanium indicate bearing inner race turning on journal or hub.

Elevated boron (B) and/or zinc (Zn) concentrations usually indicate contamination with another oil type, primarily MIL-PRF-2104. Recommend resampling and retesting immediately. If new value exceeds 8.0 PPM, run check with D19-0 to ensure proper instrument function. When proper function is confirmed, report both results and suspected contamination with MIL-PRF-2104 to chain of command, maintenance chief, cognizant engineering authority (Army and Navy only), and other personnel as specified by local written procedures. Recommend flushing and retesting of contaminated pre-oilers, carts, or other reservoirs where contamination is found until both B and Zn concentrations fall below 8.0 PPM. Refer to JOAP Manual Volume II Section IX, page 9-1 for more information. Recommend segregation of confirmed or suspected contaminated stocks, and submit information (batch no., lot no., MIL-PRF, nature of problem, etc.) on such stocks through the Defense supply deficiency reporting system.

Elevated silicon (Si) concentration usually indicates contamination with soil, sand, or dust. If aluminum (Al) is also elevated, this suggests the presence of clay or soil. Recommend resampling and retesting immediately. If new value exceeds 8.0 PPM, run check with D19-0 to ensure proper instrument function. When proper function is confirmed, report both results and suspected contamination with soil, sand, or dust to chain of command, maintenance chief, cognizant engineering authority (Army and Navy only), and other personnel as specified by local written procedures. Recommend flushing and retesting of contaminated pre-oilers, carts, or other reservoirs where contamination is found until silicon concentration falls below 8.0 PPM. Refer to JOAP Manual Volume II Section IX, page 9-1 for more information. Recommend segregation of confirmed or suspected contaminated stocks, and submit information (batch no., lot no., MIL-PRF, nature of problem, etc.) on such stocks through the Defense supply deficiency reporting system.

ENGINE: TF33-P-100 (Cont.)
AIRCRAFT: (E-3A)

NOTES

TF33 engines that have experienced a rise in magnesium only may be returned to service after accomplishing the following procedures:

1. Establish that magnesium is the only metal that is experiencing an increase (Si does not apply to this). Most likely cause is oil relief valve rubbing. Shim is available to stop valve contact to eliminate the need for the following, recurring drain and flush.

2. Drain all oil (main) from the engine.

3. Inspect oil filter and sump screen for contaminants.

4. Inspect the front gearbox assembly (front door) for any signs of abnormal wear.

5. If the above procedures check ok, then fill the engine with oil and perform a run to reestablish the baseline.

6. Take a JOAP sample and if limits fall within parameters, the engine may be returned to service.

7. A follow-up JOAP must be taken after the first five hours of engine operation.

8. Follow any command guidance in reporting high magnesium occurrence.

Fe	Main bearing ball/roller, races; seals and housing Front and main accessory drive gears Main gearbox gears
Fe Al	Front accessory drive and main gearbox oil pumps
Fe Ag	Main accessory drive gearings No. 2, 3, 4, 4½, 5 and 6 bearing cages
Fe Ag Cu & Si Sn	Main gearbox bearings
Ag Cu & Si Sn	Nos. 1and 2½ bearing cages
Mg	Main accessory drive housing
Ti	Nos. 1 and 3 bearing hub

NOTES

All bearing journals except titanium may be chrome plated during overhaul.

ENGINE: TF34-GE-100A (AIR FORCE)
AIRCRAFT: (A-10)

JOAP ATOMIC EMISSION ROTRODE

	[2]Fe	[3]Ag	Al	Cr	Cu	Mg	Ni	Ti	B	Si	Zn
[1]Abnormal Trend (PPM Increase in 10 hrs)	4	2	2	2	3		2	2			
Normal Range	0-2	0	0	0	0		0	0-2			
Marginal Range	3-6	N/A	N/A	1	1		1	N/A			
High Range	7-17	1-5	1-5	2-4	2-13		2-6	3-4			
Abnormal	≥18	≥6	≥6	≥5	≥14		≥7	≥5	10	10	10

[1]If the calculated PPM trend value is equal to or greater than the trend PPM value limit, the engine has an abnormal trend.
[2]See notes on next page.
[3]High Ag by itself is not cause for rejection of the engine.

Elevated boron (B) and/or zinc (Zn) concentrations usually indicate contamination with another oil type, primarily MIL-PRF-2104. Recommend resampling and retesting immediately. If new value exceeds 8.0 PPM, run check with D19-0 to ensure proper instrument function. When proper function is confirmed, report both results and suspected contamination with MIL-PRF-2104 to chain of command, maintenance chief, cognizant engineering authority (Army and Navy only), and other personnel as specified by local written procedures. Recommend flushing and retesting of contaminated pre-oilers, carts, or other reservoirs where contamination is found until both B and Zn concentrations fall below 8.0 PPM. Refer to JOAP Manual Volume II Section IX, page 9-1 for more information. Recommend segregation of confirmed or suspected contaminated stocks, and submit information (batch no., lot no., MIL-PRF, nature of problem, etc.) on such stocks through the Defense supply deficiency reporting system.

Elevated silicon (Si) concentration usually indicates contamination with soil, sand, or dust. If aluminum (Al) is also elevated, this suggests the presence of clay or soil. Recommend resampling and retesting immediately. If new value exceeds 8.0 PPM, run check with D19-0 to ensure proper instrument function. When proper function is confirmed, report both results and suspected contamination with soil, sand, or dust to chain of command, maintenance chief, cognizant engineering authority (Army and Navy only), and other personnel as specified by local written procedures. Recommend flushing and retesting of contaminated pre-oilers, carts, or other reservoirs where contamination is found until silicon concentration falls below 8.0 PPM. Refer to JOAP Manual Volume II Section IX, page 9-1 for more information. Recommend segregation of confirmed or suspected contaminated stocks, and submit information (batch no., lot no., MIL-PRF, nature of problem, etc.) on such stocks through the Defense supply deficiency reporting system.

Fe	Accessory gearbox bearing housings A-Sump scavenge pump rotor, vanes, and liners No. 1 bearing housing No. 1 and 3 bearings
Fe & Cr	Fuel pump drive spline

ENGINE: TF34-GE-100A (AIR FORCE) (Cont.)
AIRCRAFT: (A-10)

Fe & Ni Cr	Accessory gearbox gears and radial drive shaft Power take-off assembly gears
Fe & Cr Ni Mo	Compressor forward shaft
Fe & Cr Mo V	Typical all main engine and accessory gearbox bearing races and balls/rollers
Fe & Ni Ag	Nos. 2, 3, 4, 5, 6 and 7 main bearing cages
Fe & Cr	All main bearing rotating oil seals
Fe & Cr Cu Ni	Nos. 1, 2, 3, 4, 5, and 6 main bearing stationary oil seals Nos. 1 and 2 main bearing housing Power take-off assembly bearing housing
Al Si	Front frame Main lube and scavenge pump housing and port plates A-Sump scavenge pump housing Accessory gearbox housing
Al Ni	Fretting between No. 3 bearing housing and front frame
Cu	Main lube and scavenge pump bearings A-Sump scavenge pump bearings and drive coupling
Cu Ag Fe Ni Si	Accessory gearbox bearing cages
Ni	No. 3 bearing anti-rotation key or fan labyrinth seal teeth
Ni & Fe Mo	No. 7 main bearing rotating oil seal
Ni & Cr Fe Mo	Nos. 3, 4, 5 and 7 main bearing housings
Ni & Cr Fe	No. 6 main bearing housing
Ni & Cu Si Ag	No. 1 main bearing cage
Ni & Al V	Front fan shaft Power take-off assembly bearing housing No. 7 main bearing stationary oil seal
Ti & Fe Cr Mo V	Fan forward shaft spline wear or No. 1 or No. 2 bearing loose on fan forward shaft

NOTES

1. A rapid increase of Fe could indicate No. 1 bearing spalling. This failure occurs quickly, often with OAP readings within normal range. If a 4 PPM increase of Fe, or if abnormal trend of any metal is noted, or if Fe increases in combination with a 2 PPM increase in two or more of Ag, Cr, or Ni between consecutive samples:

ENGINE: TF34-GE-100A (AIR FORCE) (Cont.)
AIRCRAFT: (A-10)

Perform chip detector inspection per T.O.'s 1A-10A-2-71JG-5 and 2JA18-2-2-1, Section IV and 1A-10A-10-2 paragraph 4-22. If engine is not rejected for chip detector contamination, perform three ground runs: idle-80% (for 5 minutes) idle (for 5 minutes) per run and take OAP sample after each run.

a. If ground runs confirm the 4 PPM increase in Fe or abnormal trend, remove engine for teardown inspection.

b. If the 4 PPM increase in Fe or abnormal trend is not confirmed, place engine on special sampling after every flight until normal trend is firmly reestablished.

2. High Si indicates oil contamination, possibly from engine wash chemicals. Oil tank should be drained and reserviced.

3. Fuel contamination in oil indicates oil cooler leak.

OIL CAPACITY AND C0NSUMPTION INFORMATION REFERENCE MATERIAL ONLY

1. T.O. Reference: 1A-10A-2-1-3, Chapter 3

2. Oil Capacity of the TF34-GE-100A engine is 7 quarts.

3. Allowable oil consumption rate (quantity per time) is one-half (½) pint per hour.

4. Recommended oil consumption inspection interval: Following the first flight of the day or as directed by T.O. 1A-10A-6.

5. Action to take if maximum oil consumption rate is exceeded: Troubleshoot in accordance with T.O. 1A-10A-2-71TS-1.

ENGINE: TF34-GE-400B (NAVY)
AIRCRAFT: (S-3B)

JOAP ATOMIC EMISSION ROTRODE

	Fe	Ag	Al	Cr	Cu	Mg	Ni	Ti	B	Si	Zn
Abnormal Trend (PPM Increase in 10 hrs)	4	2	2	2	2	3	2	2			
Normal Range	0-9	0-1	0	0-1	0-1	0-2	0-3	0-1			
Marginal Range	10-14	2-5	1-3	2-5	2-4	3-10	4	3			
High Range	15-17	6-7	4-5	6	5-10	11-13	5-6	4			
Abnormal	≥18	≥8	≥6	≥7	≥11	≥14	≥7	≥5	10	10	10

Elevated boron (B) and/or zinc (Zn) concentrations usually indicate contamination with another oil type, primarily MIL-PRF-2104. Recommend resampling and retesting immediately. If new value exceeds 8.0 PPM, run check with D19-0 to ensure proper instrument function. When proper function is confirmed, report both results and suspected contamination with MIL-PRF-2104 to chain of command, maintenance chief, cognizant engineering authority (Army and Navy only), and other personnel as specified by local written procedures. Recommend flushing and retesting of contaminated pre-oilers, carts, or other reservoirs where contamination is found until both B and Zn concentrations fall below 8.0 PPM. Refer to JOAP Manual Volume II Section IX, page 9-1 for more information. Recommend segregation of confirmed or suspected contaminated stocks, and submit information (batch no., lot no., MIL-PRF, nature of problem, etc.) on such stocks through the Defense supply deficiency reporting system.

Elevated silicon (Si) concentration usually indicates contamination with soil, sand, or dust. If aluminum (Al) is also elevated, this suggests the presence of clay or soil. Recommend resampling and retesting immediately. If new value exceeds 8.0 PPM, run check with D19-0 to ensure proper instrument function. When proper function is confirmed, report both results and suspected contamination with soil, sand, or dust to chain of command, maintenance chief, cognizant engineering authority (Army and Navy only), and other personnel as specified by local written procedures. Recommend flushing and retesting of contaminated pre-oilers, carts, or other reservoirs where contamination is found until silicon concentration falls below 8.0 PPM. Refer to JOAP Manual Volume II Section IX, page 9-1 for more information. Recommend segregation of confirmed or suspected contaminated stocks, and submit information (batch no., lot no., MIL-PRF, nature of problem, etc.) on such stocks through the Defense supply deficiency reporting system.

NOTES

Fe	Accessory gearbox bearing housings Main lube and scavenge pump generators and shaft A-Sump scavenge pump rotor, vanes, and liners
Fe & Cr	Fuel pump drive spline
Fe & Ni Cr	Accessory gearbox gears and radial drive shaft Power take-off assembly gears

ENGINE: TF34-GE-400B (NAVY) (Cont.)
AIRCRAFT: (S-3B)

Fe & Cr Ni Mo	Compressor forward shaft
Fe & Cr Mo V	Typical all main engine and accessory gearbox bearing races and balls/rollers
Fe & Ni Ag Plate	Nos. 2, 3, 4, 5, 6 and 7 main bearing cages
Fe & Cr Plate	All main bearing rotating oil seals
Fe & Cr Cu Ni	Nos. 1, 2, 3, 4, 5, and 6 main bearing stationary oil seals Nos. 1 and 2 main bearing housing Power take-off assembly bearing housing
Al Si	Front frame Main lube and scavenge pump housing and port plates A-Sump scavenge pump housing Accessory gearbox housing
Cu	Main lube and scavenge pump bearings A-Sump scavenge pump bearings and drive coupling
Cu & Si Zn Fe Ag Plate	Accessory gearbox bearing cages
Ni & Fe Mo Cr Plate	No. 7 main bearing rotating oil seal
Ni & Cr Fe Mo	Nos. 3, 4, 5 and 7 main bearing housings
Ni & Cr Fe	No. 6 main bearing housing
Ni & Cu Si Ag Plate	No. 1 main bearing cage
Ni & Al V	Front fan shaft Power take-off assembly bearing housing No. 7 main bearing stationary oil seal
Ag	Silver, by itself, probably PTO spline wear

High Silver by itself is not cause for rejection of engine.

A rapid increase of Fe could indicate No. 1 bearing spalling. This failure occurs quickly, often with (oil analysis program) readings within normal range.

If a 4 PPM increase of Fe, or if abnormal trend of any metal is noted, or if Fe increases in combination with a 2 PPM increase in two or more of Ag, Cr, or Ni between consecutive samples.

ENGINE: TF34-GE-400B (NAVY) (Cont.)
AIRCRAFT: (S-3B

Perform chip detector inspection per NAVAIR 01-S3AAA-2-4.6, WP 008 04. If engine is not rejected for chip detector contamination, perform three ground runs: Idle-80% (for 5 minutes) idle (for 5 minutes) per run and take oil analysis program sample after each run.

a. If ground runs confirm the 4 PPM increase in Fe or abnormal trend, remove engine for teardown inspection.

b. If the 4 PPM increase in Fe or abnormal trend is not confirmed, place engine on special sampling after every flight until normal trend is firmly reestablished.

2. High Si indicates oil contamination, possible from engine wash chemicals. Oil tank should be drained and reserviced.

3. Fuel contamination in oil indicates oil cooler leak.

4. High Al indicates possible contamination from hydraulic pump expansion plug.

5. The point of contact for this equipment is Graham Harlowe (Code 05311), DSN 963-7828 or FTS (510) 263-7828.

ENGINE: TF39-GE-1C
AIRCRAFT: (C-5)

JOAP ATOMIC EMISSION ROTRODE

	Fe	Ag	Al	Cr	Cu	Mg	Ti	B	Si	Zn
[1]Abnormal Trend (PPM Increase in 10 hrs)	25	3	8	4	4	10	8			
Normal Range	0-12	0-1	0-1	0-1	0-6	0-40	0-3			
Marginal Range	13-38	2-4	2-4	2	7-13	41-65	4-7			
High Range	39-74	5-9	5-14	3-9	14-19	66-103	8-15			
Abnormal	≥75	≥10	≥15	≥10	≥20	≥104	≥16	10	10	10

[1]If the calculated PPM trend value is equal to or greater than the trend PPM value limit, the engine has an abnormal trend.

Elevated boron (B) and/or zinc (Zn) concentrations usually indicate contamination with another oil type, primarily MIL-PRF-2104. Recommend resampling and retesting immediately. If new value exceeds 8.0 PPM, run check with D19-0 to ensure proper instrument function. When proper function is confirmed, report both results and suspected contamination with MIL-PRF-2104 to chain of command, maintenance chief, cognizant engineering authority (Army and Navy only), and other personnel as specified by local written procedures. Recommend flushing and retesting of contaminated pre-oilers, carts, or other reservoirs where contamination is found until both B and Zn concentrations fall below 8.0 PPM. Refer to JOAP Manual Volume II Section IX, page 9-1 for more information. Recommend segregation of confirmed or suspected contaminated stocks, and submit information (batch no., lot no., MIL-PRF, nature of problem, etc.) on such stocks through the Defense supply deficiency reporting system.

Elevated silicon (Si) concentration usually indicates contamination with soil, sand, or dust. If aluminum (Al) is also elevated, this suggests the presence of clay or soil. Recommend resampling and retesting immediately. If new value exceeds 8.0 PPM, run check with D19-0 to ensure proper instrument function. When proper function is confirmed, report both results and suspected contamination with soil, sand, or dust to chain of command, maintenance chief, cognizant engineering authority (Army and Navy only), and other personnel as specified by local written procedures. Recommend flushing and retesting of contaminated pre-oilers, carts, or other reservoirs where contamination is found until silicon concentration falls below 8.0 PPM. Refer to JOAP Manual Volume II Section IX, page 9-1 for more information. Recommend segregation of confirmed or suspected contaminated stocks, and submit information (batch no., lot no., MIL-PRF, nature of problem, etc.) on such stocks through the Defense supply deficiency reporting system.

Fe			Inlet and transfer gearbox bearing housings and retainers
Fe	&	Ag	Inlet and transfer gearbox shafts
Fe	&	Cr	Inlet and transfer gearbox bearings and races No. 1 and 3 main bearing rollers and races

ENGINE: TF39-GE-1C (Cont.)
AIRCRAFT: (C-5)

Fe	&	Ni				No. 4B bearing housing spanner nut
Fe	&	Mn				Lube and scavenge pump shaft and elements.
Fe	&	Ag	Ni			No. 1 main bearing cages
Fe	&	Cr	Ni			Inlet and transfer gearbox gears
Fe	&	Cr	Cu	Ni		Nos. 4, 6 and 7 main bearing rotating oil seals
Fe	&	Ag	Cr			Nos. 4, 5, 6 and 7 main bearing stationary air and oil seal
		Cu	Ni			
Fe	&	Cr	Mo	V		Nos. 2, 4, 5, 6 and 7 main bearing rollers and races No. 5 main bearing fan shaft
Fe	&	Ni	Co	Mo		No. 2 main bearing fan shaft
Al	&	Mg				Lube and scavenge pump air/oil separator seal
Al	&	Si				Forward scavenge pump housing
Al	&	Cu	Si			Lube and scavenge pump cover
Cu	&	Fe	Ag	Si		No. 3 main bearing cages
Cu	&	Fe	Ag			Nos. 2, 4, 5, 6 and 7 main bearing cages
		Si	Zn			Inlet and transfer gearbox cages
Cu	&	Al	Zn	Mn		Lube and scavenge pump bearings
Mg	&	Zn				Transfer gearbox housing
Ti	&	Al	Sn			No. 2 main bearing fan frame
Ti	&	Al	V			No. 1 main bearing fan stub shaft and rotating air and oil seal No. 3 main bearing stage two-rotor disc (rotating oil seal) No. 5 main bearing HP turbine rear shaft (rotating oil seal)

ENGINE: TF39-GE-1C (Cont.)
AIRCRAFT: (C-5)

NOTES

Comparison of teardown findings with wear metal histories has shown that Fe wear metal increase rates of 1 PPM per operating hour appear to be normal and may be associated with gradual wear of the inlet gearbox splined adapter. Wear metal increase rates of 2 to 2½ PPM per operating hour appear to be abnormal and may be associated with more severe gearbox or engine bearing problems. High Ti and Fe may be caused by cracked and spinning No. 3 bearing inner race.

OIL CAPACITY AND CONSUMPTION INFORMATION

1. Oil capacity of engine: 9.1 gallons (at full mark on dipstick).

2. Allowable oil consumption rate: Reference T.O. 1C-5A-2-4, Table 3.1:

   Home station: 2 pints per hour maximum
   Enroute: 4 pints per hour maximum

3. Oil consumption inspection interval: Ref. T.O. 1C-5A-2-4, Table 3.1, as needed.

4. Actions to take if maximum allowable oil consumption is exceeded:

   Ref T.O. 1C-5A-2-4, Table 3.1
   Correct fault or replace engine

ENGINE: TF41-A-2/-2A/-2B/-2C/-400/-402C/402D (NAVY)
AIRCRAFT: (A-7A/-7E/-7F/-7H)(EA-7L) (TA-7C)

JOAP ATOMIC EMISSION ROTRODE

	[1]Fe	[1]Ag	[1]Al	[1]Cu	B	[2]Si	Zn
Abnormal Trend	4	3	3	3			
Normal Range	0-10	0-6	0-6	0-6			
Marginal Range	11-12	7	7	7			
High Range	13-15	8-9	8-9	8-9			
Abnormal	≥16	≥10	≥10	≥10	10		10

[1]Refer to important Notes section on following page. Use lab advice code F in any case where TF41 engine oil samples have critical wearmetals at the upper limit of normal range or above and/or if the trend is abnormal. Other appropriate codes may be used after the code F recommendation.

[2]Refer to Note 3 for Si guidance.

Elevated boron (B) and/or zinc (Zn) concentrations usually indicate contamination with another oil type, primarily MIL-PRF-2104. Recommend resampling and retesting immediately. If new value exceeds 8.0 PPM, run check with D19-0 to ensure proper instrument function. When proper function is confirmed, report both results and suspected contamination with MIL-PRF-2104 to chain of command, maintenance chief, cognizant engineering authority (Army and Navy only), and other personnel as specified by local written procedures. Recommend flushing and retesting of contaminated pre-oilers, carts, or other reservoirs where contamination is found until both B and Zn concentrations fall below 8.0 PPM. Refer to JOAP Manual Volume II Section IX, page 9-1 for more information. Recommend segregation of confirmed or suspected contaminated stocks, and submit information (batch no., lot no., MIL-PRF, nature of problem, etc.) on such stocks through the Defense supply deficiency reporting system.

NOTE: 1. Caution must be exercised when evaluating this engine due to high oil consumption and small oil tank capacity. Use of decision tables alone as a basis for evaluation may be misleading. Trend analysis must be utilized to successfully evaluate this engine. It is also recommended that test results be plotted on graphs to assist in evaluations. A developing trend may be indicated with increases of one or two PPM in one or more elements. If a developing trend is suspected by small increases of wear metal (s), one or two PPM, maintain close surveillance. **DO NOT REQUEST DRAIN AND FLUSH**. Use the next sample to confirm past results. If the suspected developing trend is 3 PPM or greater in one or more elements, immediately notify maintenance **NOT TO ADD OR CHANGE OIL** and request a check sample after 30 minutes ground run. If a trend continues to develop, in either situation, notify the propulsion branch chief and recommend positive maintenance action be taken.

NOTE: 2 Use lab advice code F in any case where TF41 engine oil samples have critical wear metals exceeding the normal range.

ENGINE: TF41-A-2/-2A/-2B/-2C/-400/-402C/402D(NAVY) (Cont.)
AIRCRAFT: (A-7A/-7E/-7F/-7H)(EA-7L) (TA-7C)

NOTE: 3 High silicon indicates contamination probably due to sampling error. However, consistently high silicon of 30 PPM or more indicates contamination. Flush oil system in accordance with NAVAIR 02B-5EA-6-1 or NAVAIR 01-45AAE/F-2-4.6 and sample after five hours of operation to ensure silicon removal.

NOTE: 4 Increases in Cu by itself may indicate defective bearing. Increases in Cu accompanied by increases in Fe may also indicate abnormal bearing wear and /or seal ring wear. Increases in Cr by itself in any amount may indicate rotation of no. 6 bearing outer race in housing. Increases in Cr accompanied by Fe may indicate piston ring seal wear and could result in excessive oil consumption. Increase in Al may indicate fretting internal gearbox cover and /or oil pump. Increases in Mg may indicate abnormal wear in high speed gearbox.

SOURCES OF WEAR:

Fe — Main bearing races, rollers, balls, and sleeves. gearbox , No. 2 Bearing and oil pump gears, gearbox bearings and bearing carries, No.6 bearing oil seal liner, external gearbox , oil pump and nos. 3, 4 and 5 bearing shafts, (chromium plating under no. 4 bearing inner race is a repair procedure) and nos. 6 and 7 bearing housing. (chromium plating at split line and under outer race is a repair procedure.)

Fe & Cr — Main bearing oil seal rings

Al — Internal gearbox, oil pump and no. 2 bearing housing external gearbox air blown seals and accessories drive pads and scavenge oil pump housing

Cu — Main bearing and gearbox cages and oil pump bushings

NOTES

Procedures to be accomplished in order to isolate engine oil pump as cause of high copper content in used engine oil and preclude engine rejection:

1. Remove and replace engine oil pump. Request engineering investigation of the pump. Flush oil system in accordance with NAVAIR 02B-5EA-6-1 or NAVAIR 01-45AAE/F-2-4.6. Take oil sample and perform NOAP trend analysis after each shutdown

2. If NOAP trend analysis indicates all wear metals within limits, engine is considered serviceable; otherwise recommend reject engine and request engineering investigation

Ag & Cu — No. 3 bearing oil seal and Nos. 4 and 5 bearing oil seal liner and No. 7 Bearing sump

ENGINE: JT8D-9A (AIR FORCE)
AIRCRAFT: (VC-9C, C-9A, T-43A, C-22A/B)

JOAP ATOMIC EMISSION ROTRODE

	Fe	Ag	Al	Cr	Cu	Mg	Ni	Ti	B	Si	Zn
Abnormal Trend (PPM Increase in 10 hrs)	5	2	2	2	3	3	2	3		5	
Normal Range	0-15	0-3	0-5	0-3	0-5	0-5	0-3	0-5		0-16	
[1]Marginal Range	16-19	4-6	6-7	4-6	6-7	6-7	4-5	6-7		17-24	
[2]High Range	20-24	7-8	8-9	7-9	8-9	8-9	6-8	8-9		25-49	
[3]Abnormal	≥25	≥9	≥10	≥10	≥10	≥10	≥9	≥10	10	≥50	10

[1]Reduce sampling interval by one-half.
[2]Resample each return to home station.
[3]Check main oil screen/filter for metal contamination; resample at every return to home station for 100 hours.

Elevated boron (B) and/or zinc (Zn) concentrations usually indicate contamination with another oil type, primarily MIL-PRF-2104. Recommend resampling and retesting immediately. If new value exceeds 8.0 PPM, run check with D19-0 to ensure proper instrument function. When proper function is confirmed, report both results and suspected contamination with MIL-PRF-2104 to chain of command, maintenance chief, cognizant engineering authority (Army and Navy only), and other personnel as specified by local written procedures. Recommend flushing and retesting of contaminated pre-oilers, carts, or other reservoirs where contamination is found until both B and Zn concentrations fall below 8.0 PPM. Refer to JOAP Manual Volume II Section IX, page 9-1 for more information. Recommend segregation of confirmed or suspected contaminated stocks, and submit information (batch no., lot no., MIL-PRF, nature of problem, etc.) on such stocks through the Defense supply deficiency reporting system.

Fe	Nos. 1, 3, 4½, 5 and 6 roller bearings and races, No. 3 bearing spacer/gearbox drive bevel gear. Nos. 2 and 4 ball bearings and races gearbox gears.
Fe Al	Nos. 1 and 6 scavenge oil pumps.
Fe Cu Ag	Main bearing wear
	Gearbox bearings
Ag Cu	No. 3 bearing cages
Ag Cu Sn	Nos. 1, 2, 4, 4½, 5 and 6 bearing cages
Fe Al Ag Cu	Nos. 4, 4½, and 5 scavenge oil pump
Fe Al Cr	Gearbox main oil pump
Al Mg	Gearbox housing and adapter

ENGINE: JT8D-9A (AIR FORCE) (Cont.)
AIRCRAFT: (VC-9C, C-9A, T-43A, C-22A/B)

NOTES

Oil analysis should only be used as a diagnostic tool, and alone is not justification for engine removal. The presence of other indicators such as metal particles in the oil filter must also be present.

Wear metal increase of oil sample is not reason for oil system to be drained and flushed. Draining and flushing would only destroy the established wear metal "Baseline" and hamper effectiveness of JOAP.

Sudden increase in silicon indicates dirt or sand has been introduced into the oil system.

ENGINE: JT8D-9A (NAVY)
AIRCRAFT: (C-9B, DC-9)

JOAP ATOMIC EMISSION ROTRODE

	Fe	Ag	Al	Cr	Cu	Mg	Ni	Ti	B	Si	Zn
[1]Abnormal Trend (PPM Increase in 10 hrs)	5	2	2	2	3	3	2	3		5	
Normal Range	0-15	0-3	0-5	0-3	0-5	0-5	0-3	0-5		0-16	
Marginal Range	16-19	4-6	6-7	4-6	6-7	6-7	4-5	6-7		17-24	
High Range	20-24	7-8	8-9	7-9	8-9	8-9	6-8	8-9		25-49	
Abnormal	≥25	≥9	≥10	≥10	≥10	≥10	≥9	≥10	10	≥50	10

[1]If the calculated PPM trend value is equal to or greater than the trend PPM value limit, the engine has an abnormal trend.

Elevated boron (B) and/or zinc (Zn) concentrations usually indicate contamination with another oil type, primarily MIL-PRF-2104. Recommend resampling and retesting immediately. If new value exceeds 8.0 PPM, run check with D19-0 to ensure proper instrument function. When proper function is confirmed, report both results and suspected contamination with MIL-PRF-2104 to chain of command, maintenance chief, cognizant engineering authority (Army and Navy only), and other personnel as specified by local written procedures. Recommend flushing and retesting of contaminated pre-oilers, carts, or other reservoirs where contamination is found until both B and Zn concentrations fall below 8.0 PPM. Refer to JOAP Manual Volume II Section IX, page 9-1 for more information. Recommend segregation of confirmed or suspected contaminated stocks, and submit information (batch no., lot no., MIL-PRF, nature of problem, etc.) on such stocks through the Defense supply deficiency reporting system.

NOTES

1. Marginal Range:

   a. Reduce sampling interval to every 100 hours for 200 hours.

   b. If PPM remains in marginal range or decreases to normal range, return to routine sampling intervals.

2. High Range:

   a. Within 10 hours, visually inspect the oil filter and electrically inspect chip detectors in accordance with NAVAIR 01-C9B-2-79.

   b. Resample oil and perform spectrometric oil analysis every 100 hours for 400 hours.

   c. If PPM remains in the high range or decreases into marginal range, and no metal is evident in the oil system, return to routine oil sampling intervals.

3. Abnormal Range or Abnormal Trends:

   a. Within 10 flight hours, remove and visually inspect main oil filter and chip detectors in accordance with NAVAIR 01-C9B-2-79.

ENGINE: JT8D-9A (NAVY) (Cont.)
AIRCRAFT: (C-9B, DC-9)

b. Within 50 hours, resample oil for Spectrometric Analysis.

c. If PPM remains in the abnormal range after the 50 hour sample, the oil lab should contact the CFA for disposition prior to issuing further recommendations. The operator should contact the CFA for further direction through the appropriate chain of command.

CFA:
DSN: 342-3575/
COMM : (301) 342-3575
FAX: 342-3965
COMM : (301) 342-3965

MESSAGE: PROGMGR AIR TWO TWO SEVEN PATUXENT RIVER MD//2271B1//
MAILSTOP 34 CODE 2271B1
46989 MCLEOD ROAD
NAS PATUXENT RIVER MD 20670-5449

Fe				Nos. 1, 3, 4½, 5 and 6 roller bearings and races, No. 3 bearing spacer/gearbox drive bevel gear. Nos. 2 and 4 ball bearings and races gearbox gears.
Fe	Al			Nos. 1 and 6 scavenge oil pumps.
Fe	Cu	Ag		Main bearing wear
Ag	Cu			No. 3 bearing cages
Ag	Cu	Sn		Nos. 1, 2, 4, 4½, 5 and 6 bearing cages
Fe	Al	Ag	Cu	Nos. 4, 4½, and 5 scavenge oil pump
Fe	Al	Cr		Gearbox main oil pump
Al	Mg			Gearbox housing and adapter

NOTES

Abnormal concentration of wear metal discovered during Spectrometric Analysis should not by itself be justification for engine or oil-wetted component removal: a positive correlation should be made with other indicators, such as solid metal on chip detectors and/or solid metal in filter, vibration, burned oil, etc.

Engines with an indication of high or abnormal parts per million wear metal concentration should initially be inspected for solid particulate in the form of metal slivers, flakes, etc. If the initial inspection does not indicate solid particulate, then oil sampling should be accomplished at a reduced interval for a limited period of time, but without flight restriction. During the period of reduced sampling interval, operators should have an increased awareness of other oil system indicators.

ENGINE: JT8D-9A (NAVY) (Cont.)
AIRCRAFT: (C-9B, DC-9)

3. Abnormal Fe and Cr concentrations at the microscopic level are not uncommon, and have been attributed to the following:

a. Rust accumulation on oil-wetted components: Rust within the engine oil system is not common, but may occur if the engine has been out of service for an extended period of time.

b. Bearing outer race slippages: Abnormal concentration of Fe may result if a bearing outer race slips within the bearing's liner. Bearing outer race to liner slippage is common within the gearbox. This condition may be temporary, or may continue without an adverse affect on component operation.

4. If increased wear metal concentrations are the result of a temporary condition, the levels will plateau, and eventually decrease through normal usage.

5. The oil system should not normally be drained and flushed, except if contaminated by hydraulic fluid, fuel, etc.

6. If darkening of the oil occurs, the most immediate concern is overheating of the oil. Oil overheating will generally be evidenced by darkening of the oil, accompanied by a burned oil smell (see P&W Maintenance Manual P/N 481671, Troubleshooting "Black Oil"). Synthetic ester-based aviation oils may undergo a color change in service. Synthetic turbo oils contain oxidation inhibitors in their formulations, and most, if not all, of the better oxidation inhibitors are photosensitive. A new oil, light straw in color, may go through all colors of the spectrum and end up jet black as it performs its service. The color is imparted by the oxidation inhibitor, which darkens as it performs its function.

ENGINE: F100-PW-100/-200/-220/-229
AIRCRAFT: (F-15) (F-16)

JOAP ATOMIC EMISSION ROTRODE

	Fe	Ag	Al	Cr	Cu	Mg	Ni	Ti	B	[1]Si	Zn
Abnormal Trend (PPM Increase in 10 hrs)	4	2	4	2			2	4			
Normal Range	0-10	0-2	0-10	0-4			0-4	0-10			
Marginal Range	11-12	N/A	11-12	5			5	11-12			
High Range	13-14	3	13-14	6			6	13-14			
Abnormal	≥15	≥4	≥15	≥7			≥7	≥15	10		10

[1]Refer to #4 in *F-100 Decision Making Guidelines* section for specific Si wear metal guidance.

Elevated boron (B) and/or zinc (Zn) concentrations usually indicate contamination with another oil type, primarily MIL-PRF-2104. Recommend resampling and retesting immediately. If new value exceeds 8.0 PPM, run check with D19-0 to ensure proper instrument function. When proper function is confirmed, report both results and suspected contamination with MIL-PRF-2104 to chain of command, maintenance chief, cognizant engineering authority (Army and Navy only), and other personnel as specified by local written procedures. Recommend flushing and retesting of contaminated pre-oilers, carts, or other reservoirs where contamination is found until both B and Zn concentrations fall below 8.0 PPM. Refer to JOAP Manual Volume II Section IX, page 9-1 for more information. Recommend segregation of confirmed or suspected contaminated stocks, and submit information (batch no., lot no., MIL-PRF, nature of problem, etc.) on such stocks through the Defense supply deficiency reporting system.

Fe and Ti are significant wear metals in this engine.

Fe	Nos. 1, 2, 3, 4, and 5 bearing balls/rollers and races No. 1 area inner bearing sleeve No. 5 seal plate hub Accessory drive bearing balls/rollers, races and gears Gearbox baffle (loose retaining nut)
Ag	Nos. 1, 2, 3, 4 and 5 accessory drive bearing cages
Fe & Ni	No. 4 bearing spinning on high compressor hub
Ni	No. 4 bearing spinning on high compressor hub
Ni Fe & Cr	No. 4 bearing spinning on high compressor hub
Fe & Cr	No. 4 bearing spinning on high compressor hub
Cr	No. 4 bearing spinning on high compressor hub

ENGINE: F100-PW-100/-200/-220/-229 (Cont.)
AIRCRAFT: (F-15) (F-16)

Al	Oil filter assembly, oil pump and accessory drive gearbox
Ti & Fe	No. 5 bearing compartment

F-100 DECISION MAKING GUIDELINES

1. Engine teardown or surveillance is required for any of the following:

a. Any wear metal exceeds the abnormal limit. Teardown is required.

b. Fe or Ti increase by the value of their abnormal trend within a 10 hour engine operating period (total operating time). Surveillance is required for 10 hour total operating time.

c. While on surveillance for Fe, Fe increases above the value that caused surveillance by any amount. Teardown is required.

d. While on surveillance for Ti, Ti increases above any other sample taken during surveillance by the abnormal trend value. Teardown is required.

e. Fe increases by the single sample jump limit, 5 PPM or more, between any two consecutive samples. Teardown is required.

f. Fe increases by the No. 4 bearing teardown limit, 9 PPM or more, within a 10 hour period. Teardown of the No. 4 bearing is required, unless positive identification of another wear source can be made.

g. All engines which have been disassembled for inspection due to Fe limits being exceeded. Surveillance is required for 10 hours total operating time.

2. Any sample value which requires the engine to be placed under surveillance or requires teardown shall be confirmed by a reburn. Proper engine personnel shall be notified immediately. When an engine is put on surveillance, request for oil filter and chip detector inspection should be made.

3. When a F100 engine is on surveillance, oil samples must be drawn after each flight and analysis results must be known before the next flight. All chip detectors must be checked each time a sample is drawn. During ground or test cell operation of an engine on surveillance, oil samples must be drawn at intervals no longer than one hour total operating time. After an oil sample is drawn, the engine may not be run for more than one hour before oil analysis results are available.

4. When silicon (Si) reaches or exceeds 15 PPM, drain and flush the oil. Also change the oil pressure transmitter if PN4039126; not required for PN4059195.

5. The main engine bearing may fail without indication reflected in the JOAP analysis. Spalling of these bearings is detected by chip detectors.

6. If the oil sample has an apparent burnt odor, notify proper engine personnel of condition.

NOTES

A burnt oil condition is typically, but not always, accompanied by a darkened oil color and obvious burnt odor. The condition is generated by a local heat source. A burnt oil condition cannot be detected by an atomic emission rotrode oil analysis spectometer.

ENGINE: F100-PW-100/-200/-220/-229 (Cont.)
AIRCRAFT: (F-15) (F-16)

OIL CAPACITY AND CONSUMPTION INFORMATION

1. The F100 oil capacity is 5 gallons.
2. Allowable oil consumption rate is 0.125 gallons/hour.
3. Oil level is checked after every flight and consumption rate calculated at that time.
4. Maintenance action is required if consumption rate is exceeded, per troubleshooting technical order.

NOTES

1. Actions required if abnormal range or trend samples is confirmed: contact and advise propulsion flight of recommendation JOAP Code "T". Propulsion management will evaluate and determine appropriate engine maintenance actions based on OAP and applicable on condition maintenance technical manual for burnt oil.
2. Oil samples subjected to thermal degradation usually exhibit a burnt odor.
3. Burnt oil can occur after only one flight.

EXAMPLE: PRIOR TO SURVEILLANCE
(FOR FE INCREASE IN 10 ENGINE HOURS)

JOAP RECORD		ACTION REQUIRED	REASON
HRS SINCE OIL CHANGE	FE (PPM)		
84	4		
86	5		
91	6		
92	6		
93	5		
10 HRS			
95	6		
	4 PPM*		
97	7		
101	9	RETURN OF THIS SAMPLE REQUIRED	THIS SAMPLE REPRESENTS A 4 PPM INCREASE (OR GREATER) WITHIN THE LAST 10 ENGINE OPERATING HOURS
101 (REBURN)	9	PLACE ENGINE ON SURVEILLANCE	REBURN VERIFIES ACCURACY OF 9 PPM READING
10 HRS			

* 4 PPM or greater using JOAP Atomic Emission.

ENGINE: F100-PW-100/-200/-220/-229 (Cont.)
AIRCRAFT: (F-15) (F-16)

EXAMPLE: PRIOR TO SURVEILLANCE
(FOR FE INCREASE IN 10 ENGINE HOURS)

JOAP RECORD		ACTION REQUIRED	REASON
HRS SINCE OIL CHANGE	FE (PPM)		
91	6		
92	6		
93	5		
10 HRS			
95	6	REBURN	
97	7		
101	9		
101	9		
		4 PPM*	
SURVEILLANCE			
102	8		
103	10	ENGINE TEARDOWN REQUIRED	ENGINE TEARDOWN IS REQUIRED DUE TO INCREASE ABOVE 9 PPM WHICH CAUSED ORIGINAL SURVEILLANCE

* 4 PPM or greater using JOAP Atomic Emission.

ENGINE: F101-GE-102
AIRCRAFT: (B-1B)

JOAP ATOMIC EMISSION ROTRODE

	Fe	Ag	Al	Cr	Cu	Mg	Ni	Ti	Mo	B	Si	Zn
Abnormal Trend (PPM Increase in 10 hrs)	3	2	2	2	4	2	2	2	2		5	2
Normal Range	0-8	0-3	0-3	0-6	0-12	0-6	0-5	0-5	0-2		0-12	0-2
Marginal Range	9-11	4-5	4-5	7-8	13-16	7-8	6-7	6-7	3		13-15	3
High Range	12-13	6	6	9	17-19	9	8	8	4		16-19	4
Abnormal	≥14	≥7	≥7	≥10	≥20	≥10	≥9	≥9	≥5	10	≥20	≥5

Refer to note 12 below for information concerning Pb.

Elevated boron (B) and/or zinc (Zn) concentrations usually indicate contamination with another oil type, primarily MIL-PRF-2104. Recommend resampling and retesting immediately. If new value exceeds 8.0 PPM, run check with D19-0 to ensure proper instrument function. When proper function is confirmed, report both results and suspected contamination with MIL-PRF-2104 to chain of command, maintenance chief, cognizant engineering authority (Army and Navy only), and other personnel as specified by local written procedures. Recommend flushing and retesting of contaminated pre-oilers, carts, or other reservoirs where contamination is found until both B and Zn concentrations fall below 8.0 PPM. Refer to JOAP Manual Volume II Section IX, page 9-1 for more information. Recommend segregation of confirmed or suspected contaminated stocks, and submit information (batch no., lot no., MIL-PRF, nature of problem, etc.) on such stocks through the Defense supply deficiency reporting system.

Fe & Cr	Typical all main engine, accessory gearbox and inlet gearbox bearing races and balls/rollers
Fe & Ni Ag	All main engine, accessory gearbox and inlet gearbox bearing cages
Fe & Ni Cr	Gear/gearshafts in accessory gearbox and inlet gearbox; aft lube/scavenge pump coupling shaft
Mg	Accessory gearbox housing
Cr	May be used on some bearing journals during rework - required on LP shaft journals for Nos. 4 and 5 bearing and on HP shaft bore for No. 4 outer ring
Fe & Cr Ni Cu	Frame lab seals, rotating lab seals and inlet gearbox housing
Fe & Cr	Carbon seal housings
Fe	Seal races

ENGINE: F101-GE-102 (Cont.)
AIRCRAFT: (B-1B)

Ti		Fan frame, sump housings (fwd and mid), fan and HPC shafts, No. 3 rotating air seal
Ni	& Cr Fe	Turbine frame and LPT shaft
Fe	& Cu	Hydraulic pump piston, lube and scavenge pump, A8 actuators
Cu	& Zn	Boost pump bearings
Fe	& Cr Mo Ni	Augmentor pump
Fe	& Cr Ni	Alternator rotor hub
Al		Alternator stator housing
Fe	& Si	Alternator core laminations
Si		Hydraulic pump torque motor servo valve

1. A sudden increase (9-11 PPM) of Fe may indicate main bearing distress; small amounts or Ag may accompany the Fe.

2. A moderate increasing trend of Fe may indicate excessive wear of gears and gearshaft splines.

3. For a confirmed significant (8-9 PPM) Ti reading, the Nos 1, 2 and possible No. 3 bearing inner races may be turning on the inner race journals.

4. Lube and scavenge pump bearing distress may be indicated by trends in Fe and Cu together. Al may accompany the Fe and Cu.

5. Increasing trends in Fe may indicate gearbox problems. Mg and Ag wear metals may accompany the increase in Fe.

6. Cr is used on Nos. 4 and 5 bearing journals and may be used for repair of gearbox bearing journals. Increasing Cr may indicate inner race spinning on the journals.

7. Inspect chip detectors when increases in JOAP wear metals cause concern; debris in the chip detector may indicate part distress.

8. The main engine bearings may fail without indication reflected in the JOAP analysis. Spalling of these bearings is detected by chip detectors.

9. High Si indicates oil contamination, possibly from oil servicing cart, engine wash chemicals, or hydraulic pump torque motor servo valve damping fluid. High Si content in oil sampled from the Hydraulic Pump with Normal Range Si content in the oil sampled from the Lube and Scavenge Pump oil would indicate leakage of the Hydraulic Pump Torque Motor Servo Valve damping solution, Hydraulic Pump replacement is recommended. The oil-servicing cart should be checked for contamination and, if contamination is confirmed, shall be drained and flushed. The engine shall be drained and flushed to remove Si contamination. Post maintenance samples from the engine and oil-servicing cart, if applicable, shall be analyzed by the OAP laboratory to assure all Si contamination has been removed.

ENGINE: F101-GE-102 (Cont.)
AIRCRAFT: (B-1B)

10. Boost pump bearing distress may be indicated by trends in Cu and Zn together.

11. When high JOAP levels (e.g., Cu) are noted, an additional sample should be taken from the hydraulic tank servicing tee to isolate the source to the lube or hydraulic components. When the hydraulic system is generating the wear metals, the contaminate level will be significantly higher in the hydraulic oil sample.

12. Indications of Pb are not indicative of a need for further troubleshooting. Pb residue is a result of the tube forming process.

13. Increases or abnormal levels in Zn or Mo, with no accompanying wear metals, is not cause for engine removal. However, when these abnormal trends or levels occur, the oil cart should be checked for contamination.

OIL CAPACITY AND CONSUMPTION INFORMATION

1. Total oil capacity is 5.3 gallons (minimum).

2. Maximum oil consumption rate is 0.1 gallons per hour.

3. If oil consumption rate is exceeded, locate source of leakage and make necessary adjustments or part(s) replacement. If unable to locate source of leakage, contact Engine Program Manager for further action, (OC-ALC/LPARGA, DSN 336-4480).

ENGINE: F108-CF-100GE
AIRCRAFT: (KC-135R)

JOAP ATOMIC EMISSION ROTRODE

	Fe	Ag	Al	Cr	Cu	Mg	Ni	Ti	B	Si	Zn
Abnormal Trend (PPM Increase in 10 hrs)	4	2	2	2	3		2	2			
Normal Range	0-9	0-3	0-2	0-2	0-7		0-3	0-2			
Marginal Range	10-13	4	3	3	8-10		4	3			
High Range	14-17	5	4-5	4	11-12		5	4			
Abnormal	≥18	≥6	≥6	≥5	≥13		≥6	≥5	10	10	10

Elevated boron (B) and/or zinc (Zn) concentrations usually indicate contamination with another oil type, primarily MIL-PRF-2104. Recommend resampling and retesting immediately. If new value exceeds 8.0 PPM, run check with D19-0 to ensure proper instrument function. When proper function is confirmed, report both results and suspected contamination with MIL-PRF-2104 to chain of command, maintenance chief, cognizant engineering authority (Army and Navy only), and other personnel as specified by local written procedures. Recommend flushing and retesting of contaminated pre-oilers, carts, or other reservoirs where contamination is found until both B and Zn concentrations fall below 8.0 PPM. Refer to JOAP Manual Volume II Section IX, page 9-1 for more information. Recommend segregation of confirmed or suspected contaminated stocks, and submit information (batch no., lot no., MIL-PRF, nature of problem, etc.) on such stocks through the Defense supply deficiency reporting system.

Elevated silicon (Si) concentration usually indicates contamination with soil, sand, or dust. If aluminum (Al) is also elevated, this suggests the presence of clay or soil. Recommend resampling and retesting immediately. If new value exceeds 8.0 PPM, run check with D19-0 to ensure proper instrument function. When proper function is confirmed, report both results and suspected contamination with soil, sand, or dust to chain of command, maintenance chief, cognizant engineering authority (Army and Navy only), and other personnel as specified by local written procedures. Recommend flushing and retesting of contaminated pre-oilers, carts, or other reservoirs where contamination is found until silicon concentration falls below 8.0 PPM. Refer to JOAP Manual Volume II Section IX, page 9-1 for more information. Recommend segregation of confirmed or suspected contaminated stocks, and submit information (batch no., lot no., MIL-PRF, nature of problem, etc.) on such stocks through the Defense supply deficiency reporting system.

Fe				Nos. 1 and 2 main bearings
Fe	Ag			Nos. 4 and 5 main bearings
Fe	Cu	Ag	Ti	No. 3 main bearing (Ti hub)
Al				Transfer gearbox, accessory gearbox, and lube pump housings
Fe	Cu	Ag		Transfer gearbox and accessory gearbox bearings
Fe	Ag			Gears/gearshafts in transfer/accessory gearboxes
Fe				Lube gears/shafts
Cr				May be used on some bearing journals during overhaul

ENGINE: F108-CF-100GE (Cont.)
AIRCRAFT: (KC-135R)

1. A sudden increase (10-12 PPM) of Fe or an increase (5-7 PPM) of Fe in conjunction with an indication (2 PPM) of Cu can indicate main bearing distress. The No. 3 bearing is the only main bearing with significant copper. Small amounts of Ag may accompany the Fe or Fe and Cu.

2. A moderate increasing trend of Fe may indicate excessive spline wear on the IGB horizontal shaft spline.

3. For a confirmed significant (4-5 PPM) Ti reading, the No. 3 bearing inner race is turning on the hub.

4. Lube and scavenge pump bearing distress may be indicated by trends in Fe and Cu together. Al may accompany the Fe and Cu.

5. Increasing trends in Fe may indicate gearbox problems. Al, Cu and Ag wear metals may accompany the increase in Fe.

6. Cr may be used for rework of main bearing journals and gearbox bearing journals. Increasing Cr may indicate inner race spinning on the journals except No. 3 bearing.

7. Inspect chip detectors when increases in OAP wear metals cause concern. Debris in the chip detector may indicate part distress.

8. The No. 3 main bearing may fail without indications reflected in the oil analysis. These are spalling or instantaneous failures that are detected by chip detectors.

ENGINE: F110-GE-100
AIRCRAFT: (F-16)

JOAP ATOMIC EMISSION ROTRODE

	Fe	Ag	Al	Cr	[2]Cu	Mg	Ni	Ti	Mo	B	Si	Zn
[1]Abnormal Trend (PPM Increase in 10 hrs)*	3	2	2	2	4	2	2	2	2		5	2
Normal Range	0-8	0-3	0-3	0-6	0-4	0-6	0-5	0-5	0-2		0-4	0-2
Marginal Range	9-11	4-5	4-5	7-8	5	7-8	6-7	6-7	3		5-7	3
High Range	12-13	6	6	9	6-10	9	8	8	4		8-16	4
Abnormal	≥14	≥7	≥7	≥10	≥11	≥10	≥9	≥9	≥5	10	≥17	≥5

[1]If the calculated PPM trend value is equal to or greater than the trend PPM value limit, the engine has an abnormal trend.
[2]See paragraph 2b under Potential Sources of wear metals to aid in troubleshooting.

Elevated boron (B) and/or zinc (Zn) concentrations usually indicate contamination with another oil type, primarily MIL-PRF-2104. Recommend resampling and retesting immediately. If new value exceeds 8.0 PPM, run check with D19-0 to ensure proper instrument function. When proper function is confirmed, report both results and suspected contamination with MIL-PRF-2104 to chain of command, maintenance chief, cognizant engineering authority (Army and Navy only), and other personnel as specified by local written procedures. Recommend flushing and retesting of contaminated pre-oilers, carts, or other reservoirs where contamination is found until both B and Zn concentrations fall below 8.0 PPM. Refer to JOAP Manual Volume II Section IX, page 9-1 for more information. Recommend segregation of confirmed or suspected contaminated stocks, and submit information (batch no., lot no., MIL-PRF, nature of problem, etc.) on such stocks through the Defense supply deficiency reporting system.

Fe & Cr V Mo	Typically all main engine, accessory gearbox and inlet gearbox bearing races and balls/rollers
Fe & Ni Ag	All main engine, accessory gearbox and inlet gearbox bearing cages
Fe & Ni Cr	Gear/gearshafts in accessory gearbox and inlet gearbox
Mg	Accessory gearbox housing
Cr	May be used on some bearing journals during rework - required on LP shaft journals for Nos. 4 and 5 bearing and on HP shaft bore for No. 4 outer ring
Fe & Cr Ni Cu	Frame lab seals, rotating lab seals and inlet gearbox housing
Fe & Cr	Carbon seal housings
Fe	Seals races, No. 3 locknut loose, loose No. 3 bearing locknut

ENGINE: F110-GE-100 (Cont.)
AIRCRAFT: (F-16)

Ti					Fan frame, sump housings (fwd and mid), fan and HPC shafts, No. 3 rotating air seal
Ni	&	Cr	Fe		Turbine frame and LPT shaft
Fe	&	Cu			Hydraulic pump piston, lube and scavenge pump, Ag actuator
Cu	&	Zn			Boost pump bearings
Fe	&	Cr	Mo	Ni	Augmentor pump
Fe	&	Cr	Ni		Alternator rotor hub
Al					Alternator stator housing
Fe	&	Si			Alternator core laminations
Ti	&	Fe			Loose No. 3 locknut
Fe	&	Ti	Ni		Loose No. 3 bearing locking nut
Fe	&	Ti			Loose No. 3 bearing locking nut, frame or shaft wear in forward area of mid sump
Ag	&	Cu	Mg	Zn	Contaminated with 10W30 automotive oil

RECOMMENDATIONS, DIRECTIONS AND REQUIREMENTS

1. Historically, high or abnormal wear metal levels have been tracked to engine accessory item failures. Main engine bearing failures on the F110 engine are typically caused by spalling, which is detected by Chip detectors. Bearing failures may occur without any indication reflected in the JOAP analysis. Chip detector inspection results and JOAP analysis results may be used together to increase the accuracy of the evaluation process for the F110 engine.

2. Chip detectors shall be inspected when increases in JOAP wear metal concentrations cause concern or when the OAP lab request a Red cap sample. Debris on the chip detector may indicate part distress.

3. When high wear metal concentrations are noted, a sample would be taken from the hydraulic tank servicing port to isolate the wear metal source to either the lube oil or hydraulic components. When the hydraulic system is generating the wear metals, the concentration level will be significantly higher in the hydraulic oil sample. A significant rise in Fe accompanying Ti may indicate a loose No. 3 locknut.

4. When an F110 engine has a wear metal concentration in the high range, or a trend approaching the abnormal limit, the engine shall be placed on surveillance in accordance with T.O. IF-16C-2-70FI-00-11 and T.O. 33-1-37-3.

5. If an engine has been disassembled for inspection due to wear metal concentration limits being exceeded, that engine shall be placed on surveillance in accordance with T.O. IF-16C-2-70FI-00-11 or IF-16CG-70FI-00-11 and T.O. 33-1-37-3.

6. Any wear metal concentration which requires the engine to be placed on surveillance or requires engine maintenance shall be confirmed by analyzing a second sample taken from the suspect engine. The base engine manager shall be notified of any special sample red cap requests and engine surveillance code changes.

ENGINE: F110-GE-100 (Cont.)
AIRCRAFT: (F-16)

7. When an engine is on surveillance, oil filter and chip detector inspections shall be accomplished by the appropriate personnel each time an oil sample is taken. Results will be reported to the OAP laboratory and base engine manager. Again, JOAP analysis and chip detector inspection results shall be used together to effectively evaluate the condition of the F110 engine.

8. When an F110 engine is on surveillance, oil samples shall be drawn after each flight and analysis results shall be known before the next flight. All flight is restricted to the local area.

9. An engine on surveillance may be operated for maintenance or test cell operations as long as samples are taken and analyzed and results received at intervals not to exceed one hour engine operating time. Under no circumstances shall an engine be operated past the one hour time without having the sample results.

10. When an F110 engine is on surveillance, any of the following require maintenance action to correct problem(s) causing the wear metal increases:

a. If any wear metal concentration level moves into a higher range (i.e., marginal to high).

b. The wear metal trend continues to increase.

c. Chips are found on the chip detectors.

d. When a wear metal concentration level is in the abnormal category.

e. When element(s) exceed the abnormal trend limit.

11. Engines with less than 100 flying hours since new may exhibit Fe trending and concentrations that exceed the limits prescribed in the tables. This is due to initial break-in of oil lubricated parts and the cleaning action of the oil which may remove microscopic manufacturing residues. For such engines, the following iron trending and concentration limits apply, provided that all other wear metal concentrations, oil consumption and master chip detector (MCD) inspections are normal/within limits.

a. During the first 25 hours of flight, the maximum acceptable rate of Fe increase is 6 PPM in 10 engine flight hours (EFH), and the maximum acceptable concentration is 19 PPM.

b. Between 25 and 60 flight hours, Fe trending must not exceed 4 PPM in 10 EFH, and the concentration must not exceed 19 PPM.

c. Between 60 and 100 flight hours, Fe trending must not exceed 3 PPM in 10 EFH, and the concentration must not exceed 19 PPM. For any given engine, the rate at which the maximum concentration drops will depend on the rate of oil consumption. Once Fe trending has dropped to 3 PPM or less in 10 EFH, a drain and re-service may be performed to reduce any high concentrations of Fe.

d. Engines exhibiting Fe trend/concentration within these limits shall remain on normal surveillance (Code A). After the engine has accumulated 100 flight hours, the trending and concentration limits defined in the tables must be applied.

12. F110-GE-100 engine maximum allowable consumption is 1.5 half-pints per EOT. Consumption inspection is recommended at every servicing (calculated). If the maximum consumption rate is exceeded, troubleshooting per applicable technical order (2J-F110-3-9, 2J-F110-6-4, 2J-F110-6-13, or 1F-16CJ-70FI-00-11.)

ENGINE: F110-GE-100 (Cont.)
AIRCRAFT: (F-16)

13. F110-GE-100 engine lubrication system attributes differ according to which oil tank is mounted, as follows:

	P/N 1583M89G01	P/N 7127M47G02
Lube Capacity - Full (half-pints)	43	45
Volume from "fill" Line to "full" line (half-pints)	3	6

POTENTIAL SOURCES OF WEAR METALS

1. Main bearings or gearshafts:

a. a sudden increase of Fe may indicate main bearing distress; small amounts of Ag and Ni may accompany the Fe.

b. A moderate increasing trend of Fe may indicate excessive wear of gears and gearshaft splines.

c. For a confirmed significant Ti reading (8-9 PPM for emission), the numbers 1 and 2, and possible number 3 bearing inner races may be turning on the inner race journals.

d. Increasing Cr may indicate the inner race may be spinning on the number 4 and 5 bearing journals.

e. An abnormal rise in Fe may indicate loose No. 3 bearing locking nut; this may be accompanied by rises in Ti or Ni.

2. Accessory Items:

a. Lube and scavenge pump distress may be indicated by increasing trends in Fe and Cu together. Al may accompany the Fe and Cu.

b. Following hydraulic pump replacement, a rise in Cu level may be expected during the break-in period (10-12 engine flight hours (EFH)). This trend will continue to rise during this period. A rise in Cu (3 PPM emission) in 15 EFH may indicate hydraulic pump head port relief valve failure. Troubleshoot per applicable technical order (2J-F100-3-9, 2J-F110-6-4, 2J-F110-6-13, or 1F-16CJ-70FI-00-11 for the F110-GE-100).

c. Boost pump bearing distress may be indicated by increasing trends in Cu and Zn together.

3. Gearbox:

a. Increasing trends in Fe may indicate gearbox problems. Mg and Ag wear metals may accompany the increase in Fe.

b. Chrome plating may be used for repair of gearbox bearing journals. Increasing Cr may indicate the bearing race may be spinning on the journals.

ENGINE: F110-GE-100 (Cont.)
AIRCRAFT: (F-16)

4. Miscellaneous:

a. High Si indicates oil contamination, possibly from the oil servicing cart. The oil servicing cart shall be checked for contamination and, if contamination is confirmed, shall be drained and flushed. The engine shall be drained and flushed to remove Si contamination. Post maintenance samples from the engine and oil servicing cart, if applicable, shall be analyzed by the OAP laboratory to assure all Si contamination has been removed.

b. Indications of Pb are not indicative of a need for further troubleshooting. Pb residue is a result of the tube forming process.

c. Increase or abnormal oil levels in Zn or Mo, with no significant accompanying wear metals are not cause for engine removal however, when abnormal trends or levels occur for Zn or Mo, the oil cart shall be checked for contamination.

d. A rise in Ag accompanied by a rise in Zn, Mg or Cu can be an indication that the engine has been contaminated with automotive oil (10W30, 10W40, etc.). Ag, Zn, Cu and Mg should stabilize after the engine has been drained and flushed. An Ag trend without Mg or Zn, or one which does not stabilize after the drain and flush is an indication that an engine bearing is deteriorating. Zn levels may remain high after the 10 flight hours of local operation. This is normal provided there is a general decreasing trend in Zn levels. Automotive oil contamination will not cause significant damage to oil system components. The oil servicing carts should also be inspected for contamination. Carts found to be contaminated should also be drained and flushed.

NOTES

For unusual conditions not covered by this technical order or for technical assistance, contact OC-ALC/LPAAT at DSN 336-7714, commercial (405) 736-7714.

ENGINE: F110-GE-129
AIRCRAFT: (F-16)

JOAP ATOMIC EMISSIONS ROTRODE

	Fe	Ag	Al	Cr	Cu	Mg	Ni	Ti	Mo	B	Si	Zn
Abnormal Trend (PPM Increase in 10 hrs)	3	2	2	2	4	2	2	2	2		5	2
Normal Range	0-8	0-3	0-3	0-6	0-12	0-6	0-5	0-5	0-2		0-12	0-2
Marginal Range	9-11	4-5	4-5	7-8	13-16	7-8	6-7	6-7	3		13-15	3
High Range	12-13	6	6	9	17-19	9	8	5-8	4		16-19	4
Abnormal	≥14	≥7	≥7	≥10	≥20	≥10	≥9	≥9	≥5	10	≥20	≥5

Elevated boron (B) and/or zinc (Zn) concentrations usually indicate contamination with another oil type, primarily MIL-PRF-2104. Recommend resampling and retesting immediately. If new value exceeds 8.0 PPM, run check with D19-0 to ensure proper instrument function. When proper function is confirmed, report both results and suspected contamination with MIL-PRF-2104 to chain of command, maintenance chief, cognizant engineering authority (Army and Navy only), and other personnel as specified by local written procedures. Recommend flushing and retesting of contaminated pre-oilers, carts, or other reservoirs where contamination is found until both B and Zn concentrations fall below 8.0 PPM. Refer to JOAP Manual Volume II Section IX, page 9-1 for more information. Recommend segregation of confirmed or suspected contaminated stocks, and submit information (batch no., lot no., MIL-PRF, nature of problem, etc.) on such stocks through the Defense supply deficiency reporting system.

Fe & Cr V Mo	Typically all main engine, accessory gearbox and inlet gearbox bearing races and balls/rollers
Fe & Ni Ag	All main engine, accessory gearbox and inlet gearbox bearing cages
Fe & Ni Cr	Gear/gear shafts in accessory gearbox and inlet gearbox
Mg	Accessory gearbox housing
Cr	May be used on some bearing journals during rework - required on LP shaft journals for Nos. 4 and 5 bearing and on HP shaft bore for No. 4 outer ring
Fe & Cr Ni Cu	Frame lab seals, rotating lab seals and inlet gearbox housing
Fe & Cr	Carbon seal housings
Fe	Seals races, No. 3 locknut loose, loose No. 3 bearing locknut, fan frame, sump housings (fwd and mid), fan and HPC shafts, No. 3 rotating air seal

ENGINE: F110-GE-129 (Cont.)
AIRCRAFT: (F-16)

Ni	&	Cr	Fe		Turbine frame and LPT shaft
Fe	&	Cu			Hydraulic pump piston, lube and scavenge, pump exhaust nozzle actuators
Cu	&	Zn			Boost pump bearings
Fe	&	Cr	Mo	Ni	Augmentor pump
Fe	&	Cr	Ni		Alternator rotor hub
Al					Alternator stator housing
Fe	&	Si			Alternator core laminations
Ti	&	Fe			Loose No. 3 locknut
Fe	&	Ti	Ni		Loose No. 3 bearing locking nut
Fe	&	Ti			Loose No. 3 bearing locking nut, frame or shaft wear in forward area of mid sump
Ag	&	Cu	Mg	Zn	Contaminated with 10W30 automotive oil
Zn	Mo				Contaminated with automotive oil
Si					Hydraulic pump torque motor servo valve

RECOMMENDATIONS, DIRECTIONS AND REQUIREMENTS

1. Historically, high or abnormal wear metal levels have been tracked to engine accessory item failures. Main engine bearing failures on the F110 engine are typically caused by spalling, which is detected by chip detectors. Bearing failures may occur without any indication reflected in the JOAP analysis. Chip detector inspection results and JOAP analysis results may be used together to increase the accuracy of the evaluation process for the F110 engine.

2. Chip detectors shall be inspected when increase in JOAP wear metal concentrations cause concern or when the OAP lab request a red cap sample. Debris on the chip detector may indicate part distress.

3. When high wear metal concentrations requiring maintenance action are noted, a sample shall be taken from the hydraulic tank servicing port to isolate the wear metal source to either the lube oil or hydraulic components. When the hydraulic system is generating the wear metal, the concentration level will be significantly higher in the hydraulic oil sample. If a significant rise in Fe accompanies Ti, a loose No. 3 locknut may be indicated.

4. An engine shall be placed on surveillance when Table 2-2 decision making guidelines recommend any code except "A" or "A or B" the engine shall remain on surveillance until either Table 2-2 recommendation drops to "A" or "A or B", or troubleshooting and correction are required per step 10.

5. If an engine has been disassembled for inspection due to wear metal concentration limits being exceeded, that engine shall be placed on surveillance for 10 EFH.

6. Any wear metal concentration which requires the engine be placed on surveillance or requires engine maintenance shall be confirmed by analyzing a second sample taken from the suspect engine. The base engine manager shall be notified of any special red cap requests and engine surveillance code changes.

ENGINE: F110-GE-129 (Cont.)
AIRCRAFT: (F-16)

7. When an engine is on surveillance, chip detector inspection shall be accomplished by the appropriate personnel each time an oil sample is taken. Oil and hydraulic filters shall be inspected when first placed on surveillance. Results will be reported to the OAP laboratory and base engine manager. JOAP analysis and chip detector inspection results shall be used together to effectively evaluate the condition of the F110 engine.

8. When an F110 engine is on surveillance, oil samples shall be drawn after each flight and analysis results shall be known before the next flight. Flying shall be restricted to the local area, only if Table 2-2 recommends Code E or higher.

9. Engines under surveillance maybe operated for maintenance or test cell operation for up to 2 hours engine operating time (EOT) before a sample must be taken, The engine may be operated for additional 2 hours EOT before the results of the first and second samples must be known.

10. Troubleshooting and corrective maintenance actions to correct the source of wear metals must be taken when Table 2-2 or OAP laboratory recommends code "H" or higher.

11. Engines with less than 100 flying hours since new may exhibit Fe trending and concentrations that exceed the limits prescribed in the tables. This is due to initial break-in of oil lubricated parts and the cleaning action of the oil which may remove microscopic manufacturing residues. For such engines, the following iron trending and concentration limits apply, provided that all other wear metal concentrations, oil consumption and master chip detector (MCD) inspections are normal/within limits.

a. During the first 25 hours of flight, the maximum acceptable rate of Fe increase is 6 PPM in 10 engine flight hours (EFH), and the maximum acceptable concentration is 19 PPM.

b. Between 25 and 60 flight hours, Fe trending must not exceed 4 PPM in 10 EFH, and the concentration must not exceed 19 PPM.

c. Between 60 and 100 flight hours, Fe trending must not exceed 3 PPM in 10 EFH, and the concentration must not exceed 19 PPM. For any given engine, the rate at which the maximum concentration drops will depend on the rate of oil consumption. Once Fe trending has dropped to 3 PPM or less in 10 EFH, a drain and re-service may be performed to reduce any high concentrations of Fe.

d. Engines exhibiting Fe trend/concentration within these limits shall remain on normal surveillance (Code A). After the engine has accumulated 100 flight hours, the trending and concentration limits defined in the tables must be applied.

12. F110-GE-129 Engine maximum allowable consumption is 1.5 half pints per EOT. Consumption inspection is recommended at every servicing (calculated). If the maximum consumption rate is exceeded, troubleshoot per applicable technical order (2J-F110-3-9, 2J-F110-6-4, 2J-F110-6-13, or 1F-16CJ-70FI-00-11).

13. For effect of oil servicing dilution the F110 typical lube system operating volume is 5 gallons.

POTENTIAL SOURCES OF WEAR METALS

1. Main bearings or gearshafts:

a. A sudden increase of Fe may indicate main bearing distress; small amounts of Ag and Ni may accompany the Fe.

b. A moderate increasing trend of Fe may indicate excessive wear of gears and gearshaft splines.

c. For a confirmed significant Ti reading (8-9 PPM for emission), the numbers 1 and 2, and possible number 3 bearing inner races may be turning on the inner race journals.

ENGINE: F110-GE-129 (Cont.)
AIRCRAFT: (F-16)

d. Increasing Cr may indicate the inner race may be spinning on the number 4 and 5 bearing journals.

e. An abnormal rise in Fe may indicate loose No. 3 bearing locking nut: This may be accompanied by rises in Ti or Ni.

2. Accessory items:

a. Lube and scavenge pump distress may be indicated by increasing trends in Fe and Cu together. Al may accompany the Fe and Cu.

b. Following hydraulic pump replacement, a rise in Cu level may be expected during the break-in period (10-12 engine flight hours (EFH)). This trend will continue to rise during this period. A rise in Cu (3 PPM emission) in 15 EFH may indicate hydraulic pump head port relief valve failure. Troubleshoot per applicable technical order (2J-F100-3-9, 2J-F110-6-4, 2J-F110-6-13, or IF-16CJ-70FI-00-11 for the F110-GE-129 engine).

c. Boost pump bearing distress may be indicated by increasing trends in Cu and Zn together.

3. Gearbox:

a. Increasing trends in Fe may indicate gearbox problems. Mg and Ag wear metals may accompany the increase in Fe.

b. Chrome plating may be used for repair of gearbox bearing journals. Increasing Cr may indicate the bearing race may be spinning on the journals.

4. Miscellaneous:

a. High Si indicates oil contamination, possibly from the oil servicing cart, engine wash chemicals, or hydraulic pump torque motor servo valve damping fluid. High Si content in oil sampled from the Hydraulic Pump with Normal Range Si content in the oil sampled from the Lube and Scavenge Pump oil would indicate leakage of the Hydraulic Pump Torque Motor Servo Valve damping solution, Hydraulic Pump replacement is recommended. The oil-servicing cart should be checked for contamination and, if contamination is confirmed, shall be drained and flushed. The engine shall be drained and flushed to remove Si contamination. Post maintenance samples from the engine and oil-servicing cart, if applicable, shall be analyzed by the OAP laboratory to assure all Si contamination has been removed.

b. Indications of Pb are not indicative of a need for further troubleshooting. Pb residue is a result of the tube forming process.

c. Increase or abnormal oil levels in Zn or Mo, with no significant accompanying wear metals are not cause for engine removal. However, when abnormal trends or levels occur for Zn or Mo, the oil cart shall be checked for contamination.

d. A rise in Ag accompanied by a rise in Zn, Mg or Cu can be an indication that the engine has been contaminated with automotive oil (10W30, 10W40, etc.). Ag, Zn, Cu and Mg should stabilize after the engine has been drained and flushed. An Ag trend without Mg or Zn, or one which does not stabilize after the drain and flush is an indication that an engine bearing is deteriorating. Zn levels may remain high after the 10 flight hours of local operation. This is normal provided there is a general decreasing trend in Zn levels. Automotive oil contamination will not cause significant damage to oil system components. The oil servicing carts should also be inspected for contamination. Carts found to be contaminated should also be drained and flushed.

NOTES

For technical assistance, contact ASC/LPPH at DSN 785-7869 or COMM (937) 235-7869.

ENGINE: F110-GE-400
AIRCRAFT: (F-14B) (F-14D)

JOAP ATOMIC EMISSION ROTRODE

	Fe	Ag	Al	Cr	Cu	Ni	Ti	Mo	B	Si	Zn
Abnormal Trend (PPM Increase in 10 hrs)	3	2	2	2	4	2	2	2			2
Normal Range	0-8	0-3	0-3	0-6	0-12	0-5	0-5	0-2			0-2
Marginal Range	9-11	4-5	4-5	7-8	13-16	6-7	6-7	3			3
High Range	12-13	6	6	9	17-19	8	8	4			4
Abnormal	≥14	≥7	≥7	≥10	≥20	≥9	≥9	≥5	10	10	≥5+

Elevated boron (B) and/or zinc (Zn) concentrations usually indicate contamination with another oil type, primarily MIL-PRF-2104. Recommend resampling and retesting immediately. If new value exceeds 8.0 PPM, run check with D19-0 to ensure proper instrument function. When proper function is confirmed, report both results and suspected contamination with MIL-PRF-2104 to chain of command, maintenance chief, cognizant engineering authority (Army and Navy only), and other personnel as specified by local written procedures. Recommend flushing and retesting of contaminated pre-oilers, carts, or other reservoirs where contamination is found until both B and Zn concentrations fall below 8.0 PPM. Refer to JOAP Manual Volume II Section IX, page 9-1 for more information. Recommend segregation of confirmed or suspected contaminated stocks, and submit information (batch no., lot no., MIL-PRF, nature of problem, etc.) on such stocks through the Defense supply deficiency reporting system.

Elevated silicon (Si) concentration usually indicates contamination with soil, sand, or dust. If aluminum (Al) is also elevated, this suggests the presence of clay or soil. Recommend resampling and retesting immediately. If new value exceeds 8.0 PPM, run check with D19-0 to ensure proper instrument function. When proper function is confirmed, report both results and suspected contamination with soil, sand, or dust to chain of command, maintenance chief, cognizant engineering authority (Army and Navy only), and other personnel as specified by local written procedures. Recommend flushing and retesting of contaminated pre-oilers, carts, or other reservoirs where contamination is found until silicon concentration falls below 8.0 PPM. Refer to JOAP Manual Volume II Section IX, page 9-1 for more information. Recommend segregation of confirmed or suspected contaminated stocks, and submit information (batch no., lot no., MIL-PRF, nature of problem, etc.) on such stocks through the Defense supply deficiency reporting system.

Fe & Cr V Mo	Typical all main engine, accessory gearbox and inlet gearbox bearing races and balls/rollers
Fe & Ni Ag	All main engine, accessory gearbox and inlet gearbox bearing cages
Fe & Ni Cr	Gear/gearshafts in accessory gearbox and inlet gearbox; aft lube/scavenge pump coupling shaft
Al	Accessory gearbox housing, alternator stator housing
Cr	May be used on some bearing journals during rework - required on LP shaft journals for Nos. 4 and 5 bearing and on HP shaft bore for No. 4 outer ring

ENGINE: F110-GE-400 (Cont.)
AIRCRAFT: (F-14B) (F-14D)

Fe	&	Cr	Ni	Cu	Frame lab seals, rotating lab seals and inlet gearbox housing
Fe	&	Cr			Carbon seal housings
Fe					Seal races
Ti					Fan frame, sump housings (fwd and mid), fan and HPC shafts, No. 3 rotating air seal
Ni	&	Cr	Fe		Turbine frame and LPT shaft
Fe	&	Cu			Hydraulic pump piston, lube and scavenge pump, A8 actuators
Cu	&	Zn			Boost pump bearings
Fe	&	Cr	Mo	Ni	Augmentor fuel pump
Fe	&	Cr	Ni		Alternator rotor hub
Fe	&	Si			Alternator core laminations
Si					Hydraulic pump torque motor servo valve

1. A sudden increase (9-11 PPM for emission) of Fe may indicate main bearing distress; small amounts or Ag may accompany the Fe.

2. A moderate increasing trend of Fe may indicate excessive wear of gears and gearshaft splines.

3. For a confirmed significant (8-9 PPM) Ti reading, the Nos. 1, 2 and possible No. 3 bearing inner races may be turning on the inner race journals.

4. Lube and scavenge pump bearing distress may be indicated by trends in Fe and Cu together. Al may accompany the Fe and Cu.

5. Increasing trends in Fe may indicate gearbox problems. Al and Ag wear metals may accompany the increase in Fe.

6. Cr is used on Nos. 4 and 5 bearing journals and may be used for repair of gearbox bearing journals. Increasing Cr may indicate inner race spinning on the journals.

7. Inspect chip detectors when increases in JOAP wear metals cause concern; debris in the chip detector may indicate part distress.

8. The main engine bearings may fail without indication reflected in the JOAP analysis. Spalling of these bearings are detected by chip detectors.

9. High Si indicates oil contamination, possibly from the oil servicing cart, engine wash chemicals, or hydraulic pump torque motor servo valve damping fluid. High Si content in oil sampled from the Hydraulic Pump with Normal Range Si content in the oil sampled from the Lube and Scavenge Pump oil would indicate leakage of the Hydraulic Pump Torque Motor Servo Valve damping solution, Hydraulic Pump replacement is recommended.

ENGINE: F101-GE-400 (Cont.)
AIRCRAFT: (F-14B) (F-14D)

The oil-servicing cart should be checked for contamination and, if contamination is confirmed, shall be drained and flushed. The engine shall be drained and flushed to remove Si contamination. Post maintenance samples from the engine and oil-servicing cart, if applicable, shall be analyzed by the OAP laboratory to assure all Si contamination has been removed.

10. Abnormal trend or high level of Zn is not indicative of a failure unless accompanied with an abnormal trend or high level in Cu (fuel boost pump bearings).

11. Abnormal trend or high level or Mo is not indicative of a failure unless accompanied with an abnormal trend or high level in Fe and Cr.

12. When high levels of Fe or Cu are noted, additional oil samples should be taken from the hydraulic drain port on the oil tank. This may isolate the source of wear metal to either the lube system or hydraulic system. When the hydraulic system is generating wear metal, the wear metal concentration in the hydraulic oil sample will be significantly higher than the wear metal concentration in the lube oil sample.

ENGINE: F118-GE-100
AIRCRAFT: (B-2)

JOAP ATOMIC EMISSION ROTRODE

	Fe	Ag	Al	Cr	Cu	Mg	Ni	Ti	Mo	B	Si	Zn
Abnormal Trend (PPM Increase in 10 hrs)	3	2	2	2	4	2	2	2	2		5	2
Normal Range	0-8	0-3	0-3	0-6	0-12	0-6	0-5	0-5	0-2		0-12	0-2
Marginal Range	9-11	4-5	4-5	7-8	13-16	7-8	6-7	6-7	3		13-15	3
High Range	12-13	6	6	9	17-19	9	8	8	4		16-19	4
Abnormal	≥14	≥7	≥	≥10	≥20	≥10	≥9	≥9	≥5	10	≥20	≥5

Elevated boron (B) and/or zinc (Zn) concentrations usually indicate contamination with another oil type, primarily MIL-PRF-2104. Recommend resampling and retesting immediately. If new value exceeds 8.0 PPM, run check with D19-0 to ensure proper instrument function. When proper function is confirmed, report both results and suspected contamination with MIL-PRF-2104 to chain of command, maintenance chief, cognizant engineering authority (Army and Navy only), and other personnel as specified by local written procedures. Recommend flushing and retesting of contaminated pre-oilers, carts, or other reservoirs where contamination is found until both B and Zn concentrations fall below 8.0 PPM. Refer to JOAP Manual Volume II Section IX, page 9-1 for more information. Recommend segregation of confirmed or suspected contaminated stocks, and submit information (batch no., lot no., MIL-PRF, nature of problem, etc.) on such stocks through the Defense supply deficiency reporting system.

Fe & V Mo	Typical all main engine, accessory gearbox and inlet gearbox bearing races and balls/rollers
Fe & Ni Ag	All main engine, accessory gearbox and inlet gearbox bearing cages
Fe & Ni Cr	Gear/gearshafts in accessory gearbox and inlet gearbox; aft lube/scavenge pump coupling shaft
Cr	May be used on some bearing journals during rework - required on LP shaft journals for Nos. 4 and 5 bearing and on HP shaft bore for No. 4 outer ring
Fe & Cr Ni Cu	Frame lab seals, rotating lab seals and inlet gearbox housing
Fe & Cr	Carbon seal housings
Fe	Seal races, loose No. 3 bearing locking nut
Ti	Fan frame, sump housings (fwd and mid), fan and HPC shafts, No. 3 rotating air seal
Ni & Cr Fe	Turbine frame and LPT shaft
Fe & Cu	Lube supply and scavenge pump

ENGINE: F118-GE-100 (Cont.)
AIRCRAFT: (B-2)

Fe	&	Cr	Ni	Alternator rotor hub
Al				Alternator stator housing and accessory gearbox housing
Fe	&	Si		Alternator core laminations
Fe	&	Ti	Ni	Loose No. 3 bearing locking nut
Fe	&	Ti		Loose No. 3 bearing locking nut, frame or shaft wear in forward or mid sump

1. Historically, high or abnormal wear metal levels have been tracked to engine accessory item failures. Main engine bearing failures on the F-118 engine are typically caused by spalling which is detected by the quantitative debris monitor QDM. Bearing failures may occur without any indication reflected in the JOAP analysis. QDM inspection and JOAP analysis results may be used together to increase the accuracy of the evaluation process for the F-118 engine.

2. QDM shall be inspected when increases in JOAP wear metal concentrations cause concern or when the OAP lab requests a special red cap sample. Debris on the QDM may indicate part distress.

POTENTIAL SOURCES OF WEAR METAL

1. Main Bearings or Gearboxes:

a. A sudden increase of iron Fe may indicate main bearing distress, small amounts of silver Ag and nickel Ni may accompany the Fe.

b. A moderate increasing trend of Fe may indicate excessive wear of gears and gear shafts splines.

c. For a confirmed significant titanium Ti readings, 8-9 PPM for emission rotrode, the numbers 1 and 2, and possibly number 3 bearing inner races may be turning on the inner race journals.

NOTES

If a significant rise in Fe accompanies Ti, this may indicate a loose number 3 locknut.

d. Increasing chromium Cr may indicate the inner race may be spinning on the numbers 4 and 5 bearing journals.

e. An abnormal rise in Fe may be accompanied by rises in Ti or Ni.

2. Accessory Items:

a. Lube and scavenge pump distress may be indicated by increasing trends in Fe and copper Cu together. Al may accompany the Fe and Cu.

3. Gearbox:

a. Increasing trends in Fe may indicate gearbox problems. Al and Ag wear metals may accompany the increase in Fe.

ENGINE: F118-GE-100 (Cont.)
AIRCRAFT: (B-2)

4. Miscellaneous:

a. High silicon Si indicates oil contamination, possibly from the oil servicing cart. The oil servicing cart and engine shall be checked from contamination and, if contamination is confirmed, both oil servicing cart and engine

shall be drained and flushed to remove the Si contamination. Post maintenance samples from the engine and oil servicing cart, if applicable shall, be analyzed by the OAP laboratory personnel to ensure all Si contamination has been removed.

b. Indications of lead Pb are not indicative of a need for further troubleshooting. Pb residue is a result of the tube forming process.

c. Increase or abnormal PPM levels of zinc Zn, Mg, or molybdenum Mo, with no significant accompanying wear metals are not cause for engine removal, however, when abnormal trends or levels occur for Zn, Mg, or Mo, the oil cart shall be checked for contamination. The engine shall be drained and flushed to remove Zn, Mg, or Mo contamination. Post maintenance samples from the engine and oil servicing cart, if applicable, shall be analyzed by the OAP laboratory personnel to ensure all contamination has been removed.

ENGINE: F118-GE-101
AIRCRAFT: (U2S)

JOAP ATOMIC EMISSION ROTRODE

	Fe	Ag	Al	Cr	Cu	Mg	Ni	Ti	Mo	B	Si	Zn
[1]Abnormal Trend (PPM Increase in 10 hrs)	3	2	2	2	4	2	2	2	2		5	2
Normal Range	0-8	0-3	0-3	0-6	0-12	0-6	0-5	0-5	0-2		0-12	0-2
Marginal Range	9-11	4-5	4-5	7-8	13-16	7-8	6-7	6-7	3		13-15	3
High Range	12-13	6	6	9	17-19	9	8	8	4		16-19	4
Abnormal	≥14	≥7	≥7	≥10	≥20	≥10	≥9	≥9	≥5	10	≥20	5+

[1]If the calculated PPM trend value is equal to or greater than the trend PPM value limit, the engine has an abnormal trend.

Elevated boron (B) and/or zinc (Zn) concentrations usually indicate contamination with another oil type, primarily MIL-PRF-2104. Recommend resampling and retesting immediately. If new value exceeds 8.0 PPM, run check with D19-0 to ensure proper instrument function. When proper function is confirmed, report both results and suspected contamination with MIL-PRF-2104 to chain of command, maintenance chief, cognizant engineering authority (Army and Navy only), and other personnel as specified by local written procedures. Recommend flushing and retesting of contaminated pre-oilers, carts, or other reservoirs where contamination is found until both B and Zn concentrations fall below 8.0 PPM. Refer to JOAP Manual Volume II Section IX, page 9-1 for more information. Recommend segregation of confirmed or suspected contaminated stocks, and submit information (batch no., lot no., MIL-PRF, nature of problem, etc.) on such stocks through the Defense supply deficiency reporting system.

Fe	& Cr V Mo	Typical all main engine, accessory gearbox and inlet gearbox bearing races and balls/rollers
Fe	& Ni Ag	All main engine, accessory gearbox and inlet gearbox bearing cages
Fe	& Ni Cr	Gear/gearshafts in accessory gearbox and inlet gearbox
Cr		May be used on some bearing journals during rework - required on LP shaft journals for Nos. 4 and 5 bearing and on HP shaft bore for No. 4 outer ring
Fe	& Cr Ni Cu	Frame lab seals, rotating lab seals and inlet gearbox housing
Fe	& Cr	Carbon seal housings
Fe		Seal races, loose No. 3 bearing locking nut
Ti		Fan frame, sump housings (fwd and mid), fan and HPC shafts, No. 3 rotating air seal
Ni	& Cr Fe	Turbine frame and LPT shaft

ENGINE: F118-GE-101 (Cont.)
AIRCRAFT: (U2S)

Fe	&	Cu			Lube supply and scavenge pump
Fe	&	Cr	Ni		Alternator rotor hub
Al					Alternator stator housing, accessory gearbox housing
Fe	&	Si			Alternator core laminations
Fe	&	Ti	Ni		Loose No. 3 bearing locking nut
Fe	&	Ti			Loose No. 3 bearing locking nut, frame or shaft wear in forward or mid sump
Ag	&	Cu	Mg	Zn	Contaminated with 10W30 automotive oil

RECOMMENDATIONS, DIRECTIONS AND REQUIREMENTS

1. Historically, high or abnormal wear metal levels have been tracked to engine accessory item failures. Main engine bearing failures are typically caused by spalling, which is detected by chip detectors. Bearing failures may occur without any indication reflected in the JOAP analysis. Chip detector inspection results and JOAP analysis results may be used together to increase the accuracy of the evaluation process.

2. Chip detectors shall be inspected when increases in the JOAP wear metal concentrations cause concern or when the OAP lab requests a special sample. Debris on the chip detector may indicate part distress.

3. When an engine has a wear metal concentration in the high range, or a trend approaching the abnormal limit, the engine shall be placed on surveillance with T.O. U-2S-2-4.

4. If an engine has been disassembled for inspection due to wear metal concentration limits being exceeded, that engine shall be placed on surveillance in accordance with T.O. U-2S-2-4.

5. Any wear metal concentration which requires the engine to be placed on surveillance or requires engine maintenance shall be confirmed by analyzing a second sample taken from the suspect engine. The base engine manager shall be notified of any special sample requests and engine surveillance code changes.

6. When an engine is on surveillance, oil filter and chip detector inspections shall be accomplished by the appropriate personnel each time an oil sample is taken. Results will be reported to the OAP laboratory and base engine manager. Again, JOAP analysis and chip detector inspection results shall be used together to effectively evaluate the condition of the engine.

7. When an engine is on surveillance, oil samples shall be drawn after each flight and analysis results shall be known before the next flight. All flying is restricted to the local area.

8. An engine on surveillance may be operated for maintenance or test cell operations as long as samples are taken and analyzed and results received at intervals not to exceed one hour engine operating time. Under no circumstances shall an engine be operated past the one hour time without having the sample results.

ENGINE: F118-GE-101 (Cont.)
AIRCRAFT: (U2S)

9. When an engine is on surveillance, any of the following require maintenance action to correct the problem(s):

a. If any wear metal concentration level moves into the higher range (i.e. marginal to high).

b. The wear metal trend continues to increase.

c. Chips are found on the chip detector.

d. When a wear metal concentration level is in the abnormal category.

e. When element(s) exceed the abnormal trend limit.

10. Engines with less than 100 hours engine operating time since new may typically increase into the marginal or high range for Fe due to initial break-in of seals, etc. However, the Fe reading is not indicative of actual component failure, effective JOAP analysis and chip detector inspections are essential. If all other wear metals concentrations are normal, the Fe trend is normal and chip detector inspection is normal, then the engine may be returned to normal surveillance.

11. F118-GE-101 engine maximum allowable consumption is 0.10 gallons per hour. Consumption inspection is recommended at every servicing (calculated). If maximum consumption rate is exceeded, troubleshoot per applicable technical order U-2S-2-4.

POTENTIAL SOURCES OF WEAR METALS

1. Main bearings or gearshafts:

a. A sudden increase of Fe may indicate main bearing distress, small amounts of Ag and Ni may accompany the Fe.

b. A moderate increasing trend of Fe may indicate excessive wear of gears and gearshaft splines.

c. For a confirmed significant Ti reading (8-9 PPM), the numbers 1 and 2, and possibly number 3 bearing inner races may be turning on the inner race journals.

d. Increasing Cr may indicate the inner race may be spinning on the numbers 4 and 5 bearing journals.

e. An abnormal rise in Fe may indicate a loose No. 3 bearing locking nut; this may be accompanied by rises in Ti or Ni.

2. Accessory items: Lube and scavenge pump distress may be indicated by increasing trends in Fe and Cu together. Al may accompany the Fe and Cu.

3. Gearbox:

a. Increasing trends in Fe may indicate gearbox problems. Al and Ag wear metals may accompanying the increase in Fe.

b. Chrome plating may be used for repair of gearbox bearing journals. Increasing Cr may indicate the bearing race may be spinning on the journals.

ENGINE: F118-GE-101 (Cont.)
AIRCRAFT: (U2S)

4. Miscellaneous:

a. High Si indicates oil contamination, possibly from the oil servicing cart. The oil servicing cart shall be checked for contamination and, if contamination is confirmed, shall be drained and flushed. The engine shall be drained and flushed to remove Si contamination. Post maintenance samples from the engine and oil servicing cart, if applicable, shall be analyzed by the OAP laboratory to assure all Si contamination has been removed.

b. Indications of Pb are not indicative of a need for further troubleshooting. Pb residue is a result of the tube forming process.

c. Increases or abnormal levels of Zn or Mo, with no significant accompanying wear metals are not cause for engine removal. However, when abnormal trends or levels occur for Zn or Mo, the oil cart shall be checked for contamination.

d. A rise in Ag accompanied by a rise in Zn, Mg, or Cu can be an indication that the engine has been contaminated with automotive oil (10W30, 10W40, etc.). Ag, Zn, Cu, and Mg should stabilize after the engine has been drained and flushed. A Ag trend without Mg or Zn, or one which does not stabilize after the drain and flush is an indication that an engine bearing is deteriorating. Zn levels may remain high after the 10 flight hours of local operation. This is normal provided there is a general decreasing trend in Zn levels. Automotive oil contamination will not cause significant damage to oil system components The oil servicing carts should also be inspected for contamination. Carts found to be contaminated should also be drained and flushed.

ENGINE: F119-PW-100A
AIRCRAFT: (F-22)

JOAP ATOMIC EMISSION ROTRODE

	Fe	Ag	Al	Cr	Cu	Mg	Ni	Ti	Si	B	Zn
Abnormal Trend (PPM Increase in 10 hrs)*	3	2	3	2	3	2	2	3	N/A		
Normal Range	0-5	0-2	0-5	0-4	0-4	0-4	0-4	0-5	0-10		
Marginal Range	6-7	N/A	6-7	5	5-7	5	5	6-7	N/A		
High Range	8-9	3	8-9	6	8-9	6	6	8-9	N/A		
Abnormal	≥10	≥4	≥10	≥7	≥10	≥7	≥7	≥10	≥10	10	10

Elevated boron (B) and/or zinc (Zn) concentrations usually indicate contamination with another oil type, primarily MIL-PRF-2104. Recommend resampling and retesting immediately. If new value exceeds 8.0 PPM, run check with D19-0 to ensure proper instrument function. When proper function is confirmed, report both results and suspected contamination with MIL-PRF-2104 to chain of command, maintenance chief, cognizant engineering authority (Army and Navy only), and other personnel as specified by local written procedures. Recommend flushing and retesting of contaminated pre-oilers, carts, or other reservoirs where contamination is found until both B and Zn concentrations fall below 8.0 PPM. Refer to JOAP Manual Volume II Section IX, page 9-1 for more information. Recommend segregation of confirmed or suspected contaminated stocks, and submit information (batch no., lot no., MIL-PRF, nature of problem, etc.) on such stocks through the Defense supply deficiency reporting system.

F-119 decision making guidelines:

1. Teardown maintenance for the F-119 is directed within the F-22 integrated maintenance information system (IMIS) by advanced engine failure resolution (AEFR). Engine JOAP data should be loaded into the IMIS database via the JOAP history window accessed from the IMIS desktop. The AEFR trending function will analyze the JOAP data and set a failure report code (FRC) for any abnormal trend or limit exceedances. JOAP FRCs are then utilized to create a JCN directing the appropriate engine teardown maintenance.

2. Any sample value which requires the engine to be placed under surveillance or requires teardown shall be confirmed by a reburn. Only the reburn sample values shall be loaded into the IMIS database. Proper engine personnel shall be notified immediately. When an engine is put on surveillance, request for oil filter and chip detector inspection will be made. When an engine is on surveillance, all chip detectors are to be checked each time an oil sample is taken.

3. When a F-119 engine is on surveillance, oil samples must be drawn after each flight and analysis results must be known before the next flight. all chip detectors must be checked each time a sample is drawn. During ground or test cell operation of an engine on surveillance, oil samples must be drawn at intervals no longer than one hour total operating time. After an oil sample is drawn, the engine may not be run for more than one hour before oil analysis results are available.

4. The main engine bearing may fail without indication reflected in the JOAP analysis. Spalling of these bearings is detected by chip detectors.

ENGINE: F119-PW-100A (Cont.)
AIRCRAFT: (F-22)

5. Engine teardown or surveillance is required for any of the following:

a. Any wearmetal exceeds the abnormal limit. Teardown is required

b. Wearmetal increase by the value of their abnormal trend within a 10 hour engine operating period (total operating time). Surveillance is required for a 10 hour total operating time period.

c. While on surveillance for Fe, Fe increases above the value that caused surveillance by any amount. Teardown is required.

d. While on surveillance for Ti, Ti increases above any other sample taken during surveillance by the abnormal trend value. Teardown is required.

e. Fe increases by the single sample jump limit (3 PPM or more) between any two consecutive samples, Teardown is required.

f. All engines which have been disassembled for inspection due to Fe limits being exceeded are to be placed on surveillance for 10 hours total operating time following repair.

6. When silicon (Si) reaches or exceeds 10 PPM in any two consecutive samples, perform F-22 IMIS task "test engine – perform oil contamination check run" (lcn a720000) or suitable drain and flush procedure.

Wearmetal sources - Fe and Ti are significant wearmetals in this engine.

Fe
- No. 1, 2, 3, 4, and 5 mainshaft balls/roller bearings (including races and rolling elements)
- Front, mid, and rear compartments
- Upper towershaft pinion gear / bull gear - mid compartment
- Upper towershaft ball / roller bearings - mid compartment
- Accessory ball / roller bearings - gearbox
- No. 3 bearing inner ring spinning on the bull gear – mid compartment
- Carbon seal runners - front, mid, and rear compartments
- Gear rotor wear - main oil pump

Ag
- Mainshaft, upper towershaft, and accessory bearing cages (silver plated) - gearbox, front, mid, and rear components
- No. 4 and 5 bearing nuts (silver plated) - rear compartment
- Upper towershaft pinion gear and gearbox spiral bevel gear (silver flash) - mid compartment
- Bushings in oil pump (silver impregnated) - main oil pump

NOTE:
Abnormal levels of silver can be attributed to motor oil contamination, check for high levels of zinc (i.e. >6 PPM)

Fe & Ni
- No. 4 bearing inner ring and no. 5 bearing inner ring spinning on shaft - rear compartment
- No. 5.5 carbon seal housing rubbing against oil slinger – rear compartment
- OD KE's spinning on HPT shaft - rear compartment

ENGINE: F119-PW-100A (Cont.)
AIRCRAFT: (F-22)

Fe & Ti
- No. 1 bearing inner ring spinning on the fan hub – front compartment
- No. 2 bearing inner ring spinning on the stub shaft - mid compartment
- No. 1, 3, and 5 bearing outer race bottoming on housing - front, mid, and rear compartments
- All carbon seal runners against seal housings (except 5.5 carbon seal runner) - front, mid, and rear compartments

Ni
- No. 4 bearing inner ring and no. 5 bearing inner ring spinning on shaft - rear compartment
- No. 5.5 carbon seal housing rubbing against oil slinger – rear compartment
- OD KE's spinning on HPT shaft - rear compartment

Ti
- No. 1 bearing inner ring spinning on the fan hub – front compartment
- No. 2 bearing inner ring spinning on the stub shaft – mid compartment
- All seal housings - front, mid, and rear compartments
- PTO shaft - gearbox

Fe, Ni, & Cr
- No. 4 or no. 5 bearing inner ring spinning on its shaft – rear compartment

Fe & Cr
- No. 4 or no. 5 bearing inner ring spinning on its shaft – rear compartment

Mg
- Gearbox housing
- Lube scavenge pump housing (main oil pump)

Al
- Oil pump port plates and sleeve

Cu & Ni
- Rear compartment abradable seal material

Si
-External contaminant (i.e. sand, dirt)

Sn
- External contaminant (servicing cart deterioration)

Oil capacity and consumption information

1. The F-119 oil capacity is 13.2 quarts.
2. Allowable oil consumption rate is 0.15 gallon/hour.
3. Oil level is downloaded from the engine cedu after every flight and consumption rate calculated at that time.
4. Maintenance action is required if consumption rate is exceeded, per troubleshooting technical order.

ENGINE: F119-PW-100A (Cont.)
AIRCRAFT: (F-22)

EXAMPLE: PRIOR TO SURVEILLANCE

(FOR FE INCREASE IN 10 ENGINE HOURS)

JOAP RECORD HRS SINCE OIL CHANGE	FE (PPM)		ACTION REQUIRED	REASON
84	1			
86	1			
91	2			
92	2			
93	3			
95	4			
97	5	3 PPM*		
101	5		REBURN OF THIS SAMPLE REQUIRED	THIS SAMPLE REPRESENTS A 3 PPM INCREASE (OR GREATER) WITHIN THE LAST 10 ENGINE OPERATING HOURS
101 (REBURN)	5		PLACE ENGINE ON SURVEILLANCE	REBURN VERIFIES ACCURACY OF 5 PPM READING

10 HRS

ENGINE: F119-PW-100A (Cont.)
AIRCRAFT: (F-22)

EXAMPLE: PRIOR TO SURVEILLANCE

(FOR FE INCREASE IN 10 ENGINE HOURS)

JOAP RECORD HRS SINCE OIL CHANGE	FE (PPM)	ACTION REQUIRED		REASON
91	6			
92	6			
93	5			
10 HRS				
95	6	REBURN		
97	7			
101	8			
101	8			
		3 PPM	REBURN OF THIS SAMPLE REQUIRED	THIS SAMPLE REPRESENTS A 3 PPM INCREASE (OR GREATER) WITHIN THE LAST 10 ENGINE OPERATING HOURS
SURVEILLANCE				
102	8			
103	10		ENGINE TEARDOWN REQUIRED	ENGINE TEARDOWN IS REQUIRED DUE TO INCREASE ABOVE 8 PPM WHICH CAUSED ORIGINAL SURVEILLANCE **NOTE:** ALSO EXCEEDS ABNORMAL LIMIT

ENGINE: F402-RR-406B/-408A/-408B (MARINES)
AIRCRAFT: (TAV-8B) (AV-8B)

JOAP ATOMIC EMISSION ROTRODE

	Fe	Ag	Al	Cr	Cu	Mg	B	Si	Zn
Abnormal Trend (PPM Increase in 10 hrs)									
Normal Range									
Marginal Range									
High Range									
Abnormal							10	10	10

Elevated boron (B) and/or zinc (Zn) concentrations usually indicate contamination with another oil type, primarily MIL-PRF-2104. Recommend resampling and retesting immediately. If new value exceeds 8.0 PPM, run check with D19-0 to ensure proper instrument function. When proper function is confirmed, report both results and suspected contamination with MIL-PRF-2104 to chain of command, maintenance chief, cognizant engineering authority (Army and Navy only), and other personnel as specified by local written procedures. Recommend flushing and retesting of contaminated pre-oilers, carts, or other reservoirs where contamination is found until both B and Zn concentrations fall below 8.0 PPM. Refer to JOAP Manual Volume II Section IX, page 9-1 for more information. Recommend segregation of confirmed or suspected contaminated stocks, and submit information (batch no., lot no., MIL-PRF, nature of problem, etc.) on such stocks through the Defense supply deficiency reporting system.

Elevated silicon (Si) concentration usually indicates contamination with soil, sand, or dust. If aluminum (Al) is also elevated, this suggests the presence of clay or soil. Recommend resampling and retesting immediately. If new value exceeds 8.0 PPM, run check with D19-0 to ensure proper instrument function. When proper function is confirmed, report both results and suspected contamination with soil, sand, or dust to chain of command, maintenance chief, cognizant engineering authority (Army and Navy only), and other personnel as specified by local written procedures. Recommend flushing and retesting of contaminated pre-oilers, carts, or other reservoirs where contamination is found until silicon concentration falls below 8.0 PPM. Refer to JOAP Manual Volume II Section IX, page 9-1 for more information. Recommend segregation of confirmed or suspected contaminated stocks, and submit information (batch no., lot no., MIL-PRF, nature of problem, etc.) on such stocks through the Defense supply deficiency reporting system.

The F402 Engine Series (F402-RR-/406B/408A/408B) utilizes Quantitative Debris Monitoring (QDM) as its primary oil monitoring system. QDM is performed at a recurring 15 hour interval. NOAP samples are ONLY required to be obtained in response to specific ODMN triggers/thresholds conditions. Samples should be processed to determine elemental composition and results recorded on OIL ANALYSIS REQUEST form. Return results to the requesting activity without recommendations or advice codes. QEM/NOAP procedures and limits are contained within the F402 Engine Standards Practices Manual, A1-F42B-SPM-000. All NOAP samples submitted are to be considered special samples. Results are to be transmitted to the submitting activity via phone, facsimile, or e-mail.

ENGINE: F404-GE-400/-402 (NAVY)
AIRCRAFT: (F/A-18A/B/C/D)

JOAP ATOMIC EMISSION ROTRODE

	Fe	Ag	Al	Cr	Cu	Mg	Ni	Ti	B	Si	Zn
Abnormal Trend (PPM Increase in 10 hrs)	3	2	2	2	2		2	3			
Normal Range	0-8	0-5	0-3	0-3	0-5		0-5	0-5			
Marginal Range	9-11	6-7	4-6	4-6	6-7		6-7	6-7			
High Range	12-14	8-9	7-9	7-9	8-9		8-9	8-9			
Abnormal	≥15	≥10	≥10	≥10	≥10		≥10	≥10	10	10	10

Elevated boron (B) and/or zinc (Zn) concentrations usually indicate contamination with another oil type, primarily MIL-PRF-2104. Recommend resampling and retesting immediately. If new value exceeds 8.0 PPM, run check with D19-0 to ensure proper instrument function. When proper function is confirmed, report both results and suspected contamination with MIL-PRF-2104 to chain of command, maintenance chief, cognizant engineering authority (Army and Navy only), and other personnel as specified by local written procedures. Recommend flushing and retesting of contaminated pre-oilers, carts, or other reservoirs where contamination is found until both B and Zn concentrations fall below 8.0 PPM. Refer to JOAP Manual Volume II Section IX, page 9-1 for more information. Recommend segregation of confirmed or suspected contaminated stocks, and submit information (batch no., lot no., MIL-PRF, nature of problem, etc.) on such stocks through the Defense supply deficiency reporting system.

Elevated silicon (Si) concentration usually indicates contamination with soil, sand, or dust. If aluminum (Al) is also elevated, this suggests the presence of clay or soil. Recommend resampling and retesting immediately. If new value exceeds 8.0 PPM, run check with D19-0 to ensure proper instrument function. When proper function is confirmed, report both results and suspected contamination with soil, sand, or dust to chain of command, maintenance chief, cognizant engineering authority (Army and Navy only), and other personnel as specified by local written procedures. Recommend flushing and retesting of contaminated pre-oilers, carts, or other reservoirs where contamination is found until silicon concentration falls below 8.0 PPM. Refer to JOAP Manual Volume II Section IX, page 9-1 for more information. Recommend segregation of confirmed or suspected contaminated stocks, and submit information (batch no., lot no., MIL-PRF, nature of problem, etc.) on such stocks through the Defense supply deficiency reporting system.

NOTES

The requirement for routine oil analysis on the F404-GE-400/402 engine installed in the FA-18/TF-18A aircraft has been deleted in accordance with NAVAIRSYSCOM ltr AIR-5361C4/CDT Ser 8 May 14 84. Evaluation criteria is being retained for reference and for use if directed by cognizant authority.

The requirement for special oil analysis sampling (reference NAVAIR 17-15-50.1) is optional. The F404-GE-400/402 engine is not on routine oil analysis; therefore, evaluation of special sampling results may be difficult. If necessary, contact cognizant engineering authority for assistance.

ENGINE: CFM56-2A-2
AIRCRAFT: (E-6A)

JOAP ATOMIC EMISSION ROTRODE

	Fe	Ag	Al	Cr	Cu	Mg	Ni	Ti	B	Si	Zn
Abnormal Trend (PPM Increase in 10 hrs)	4	2	2	2	3		2	2			
Normal Range	0-9	0-3	0-2	0-2	0-7		0-3	0-2			
Marginal Range	10-13	4	3	3	8-10		4	3			
High Range	14-17	5	4-5	4	11-12		5	4			
Abnormal	≥18	≥6	≥6	≥5	≥13		≥6	≥5	10	10	10

Elevated boron (B) and/or zinc (Zn) concentrations usually indicate contamination with another oil type, primarily MIL-PRF-2104. Recommend resampling and retesting immediately. If new value exceeds 8.0 PPM, run check with D19-0 to ensure proper instrument function. When proper function is confirmed, report both results and suspected contamination with MIL-PRF-2104 to chain of command, maintenance chief, cognizant engineering authority (Army and Navy only), and other personnel as specified by local written procedures. Recommend flushing and retesting of contaminated pre-oilers, carts, or other reservoirs where contamination is found until both B and Zn concentrations fall below 8.0 PPM. Refer to JOAP Manual Volume II Section IX, page 9-1 for more information. Recommend segregation of confirmed or suspected contaminated stocks, and submit information (batch no., lot no., MIL-PRF, nature of problem, etc.) on such stocks through the Defense supply deficiency reporting system.

Elevated silicon (Si) concentration usually indicates contamination with soil, sand, or dust. If aluminum (Al) is also elevated, this suggests the presence of clay or soil. Recommend resampling and retesting immediately. If new value exceeds 8.0 PPM, run check with D19-0 to ensure proper instrument function. When proper function is confirmed, report both results and suspected contamination with soil, sand, or dust to chain of command, maintenance chief, cognizant engineering authority (Army and Navy only), and other personnel as specified by local written procedures. Recommend flushing and retesting of contaminated pre-oilers, carts, or other reservoirs where contamination is found until silicon concentration falls below 8.0 PPM. Refer to JOAP Manual Volume II Section IX, page 9-1 for more information. Recommend segregation of confirmed or suspected contaminated stocks, and submit information (batch no., lot no., MIL-PRF, nature of problem, etc.) on such stocks through the Defense supply deficiency reporting system.

Fe	Nos. 1 and 2 main bearings
Fe Ag	Nos. 4 and 5 main bearings
Fe Cu Ag Ti	No. 3 main bearing (Ti hub)
Al	Transfer gearbox, accessory gearbox, and lube pump housings
Fe Cu Ag	Transfer gearbox and accessory gearbox bearings

ENGINE: CFM56-2A-2 (Cont.)
AIRCRAFT: (E-6A)

Fe	Ag	Gears/gearshafts in transfer/accessory gearboxes
Fe		Lube gears/shafts
Cr		May be used on some bearing journals during overhaul

1. A sudden increase (10-12 PPM AE) of Fe or an increase (5-7 PPM AE) of Fe in conjunction with an indication (2 PPM AE) of Cu can indicate main bearing distress. The No. 3 bearing is the only main bearing with significant copper. Small amounts of Ag may accompany the Fe or Fe and Cu.

2. A moderate increasing trend of Fe may indicate excessive spline wear on the IGB horizontal shaft spline.

3. For a confirmed significant (4-5 PPM AE) Ti reading, the No. 3 bearing inner race is turning on the hub.

4. Lube and scavenge pump bearing distress may be indicated by trends in Fe an Cu together. Al may accompany the Fe and Cu.

5. Increasing trends in Fe may indicate gearbox problems. Al, Cu and Ag wear metals may accompany the increase in Fe.

6. Cr may be used for rework of main bearing journals and gearbox bearing journals. Increasing Cr may indicate inner race spinning on the journals except No. 3 bearing.

7. Inspect chip detectors when increases in OAP wear metals cause concern. Debris in the chip detector may indicate part distress.

8. The No. 3 main bearing may fail without indications reflected in the oil analysis. These are spalling or instantaneous failures that are detected by chip detectors.

ENGINE: CF6-50
AIRCRAFT: (E-4B)

JOAP ATOMIC EMISSION ROTRODE

	Fe	Ag	Al	Cr	Cu	Mg	Ni	Ti	B	Si	Zn
Abnormal Trend (PPM Increase in 10 hrs)	5.0	1.0	3.0	1.0	1.0	1.0	1.0	0.3		15.0	
Normal Range	0-3.0	0-0.4	0-1.0	0-0.2	0-0.4	0-0.3	0-0.2	0-0.2		0-3.0	
Marginal Range	3.1-7.0	0.5-1.0	1.1-3.0	0.3-0.7	0.5-1.0	0.4-2.0	0.3-0.7	0.3-1.2		3.1-15.0	
High Range	7.1-10.0	1.1-1.5	3.1-7.0	0.8-1.5	1.1-1.5	2.1-4.0	0.8-1.5	1.3-2.0		15.1-50.0	
Abnormal	≥10.1	≥1.6	≥7.1	≥1.6	≥1.6	≥4	≥1.6	≥2.	10	≥50.1	10

Elevated boron (B) and/or zinc (Zn) concentrations usually indicate contamination with another oil type, primarily MIL-PRF-2104. Recommend resampling and retesting immediately. If new value exceeds 8.0 PPM, run check with D19-0 to ensure proper instrument function. When proper function is confirmed, report both results and suspected contamination with MIL-PRF-2104 to chain of command, maintenance chief, cognizant engineering authority (Army and Navy only), and other personnel as specified by local written procedures. Recommend flushing and retesting of contaminated pre-oilers, carts, or other reservoirs where contamination is found until both B and Zn concentrations fall below 8.0 PPM. Refer to JOAP Manual Volume II Section IX, page 9-1 for more information. Recommend segregation of confirmed or suspected contaminated stocks, and submit information (batch no., lot no., MIL-PRF, nature of problem, etc.) on such stocks through the Defense supply deficiency reporting system.

Al — Distress in no. 1 bearing aft housing, accessory gearbox, transfer gearbox, adapters inlet gear box, horizontal driveshaft, lube & scavenge pump housings.

Si — If Si is greater than 50 PPM change engine oil.

Ti — 0.3-2.0 PPM resample 1 time after 50 flight hours, or 20 cycles, whichever occurs first. Ti greater than 2.0 PPM resample immediately. If 2.0 PPM Ti is confirmed remove engine.

Cu — Significant level of Cu could be wear on the L&S pump bushing, accessory bearing, or gearbox bearing cage. Resample after 50 hours; if Cu is still high, investigate.

ENGINE: CF6-50 (Cont.)
AIRCRAFT: (E-4B)

Fe	For increase of 5.0 PPM resample after 50 flight hours. For increase of 12-15 PPM or total reading is 30 PPM or higher, radiographic inspection per Boeing manual 72-00-00 must be accomplished within the next 70 hours and following every 250 ± 50 hours until the problem is resolved. *Immediate investigation is required* for reported large (10 to 12 PPM) increase of iron or a minor (5 to 7) increase of iron in conjunction with an indication of copper.
Ti, Fe, Ni	No. 3 bearing inner race spinning on shaft.
Ti, Fe	Loose no.1 bearing spanner nut, or inner race spinning.
Ti, Al, Ni	No. 1 bearing forward housing loose.
Fe, Cu, Zn	Accessory gearbox bearing, or lube and scavenge pump distress.
Fe, Cr	Gearbox parts distress.
Fe, Ni, Cr	Distress in B, C, or D sumps.

ENGINE: F404-GE-F1D2 (AIR FORCE)
AIRCRAFT: (F-117A)

JOAP ATOMIC EMISSION ROTRODE

	Fe	Ag	Al	Cr	Cu	Mg	Ni	Ti	B	Si	Zn
Abnormal Trend (PPM Increase in 10 hrs)	3	3	2	2	2		3	3			
Normal Range	0-8	0-6	0-3	0-3	0-5		0-6	0-6			
Marginal Range	9	7	4	4	6		7	7			
High Range	10-11	8-9	5	5	7		8-9	8-9			
Abnormal	≥12	≥10	≥6	≥6	≥8		≥10	≥10	10	10	10

Elevated boron (B) and/or zinc (Zn) concentrations usually indicate contamination with another oil type, primarily MIL-PRF-2104. Recommend resampling and retesting immediately. If new value exceeds 8.0 PPM, run check with D19-0 to ensure proper instrument function. When proper function is confirmed, report both results and suspected contamination with MIL-PRF-2104 to chain of command, maintenance chief, cognizant engineering authority (Army and Navy only), and other personnel as specified by local written procedures. Recommend flushing and retesting of contaminated pre-oilers, carts, or other reservoirs where contamination is found until both B and Zn concentrations fall below 8.0 PPM. Refer to JOAP Manual Volume II Section IX, page 9-1 for more information. Recommend segregation of confirmed or suspected contaminated stocks, and submit information (batch no., lot no., MIL-PRF, nature of problem, etc.) on such stocks through the Defense supply deficiency reporting system.

Elevated silicon (Si) concentration usually indicates contamination with soil, sand, or dust. If aluminum (Al) is also elevated, this suggests the presence of clay or soil. Recommend resampling and retesting immediately. If new value exceeds 8.0 PPM, run check with D19-0 to ensure proper instrument function. When proper function is confirmed, report both results and suspected contamination with soil, sand, or dust to chain of command, maintenance chief, cognizant engineering authority (Army and Navy only), and other personnel as specified by local written procedures. Recommend flushing and retesting of contaminated pre-oilers, carts, or other reservoirs where contamination is found until silicon concentration falls below 8.0 PPM. Refer to JOAP Manual Volume II Section IX, page 9-1 for more information. Recommend segregation of confirmed or suspected contaminated stocks, and submit information (batch no., lot no., MIL-PRF, nature of problem, etc.) on such stocks through the Defense supply deficiency reporting system.

NOTES

The requirement for the routine oil analysis on the F404-GE-F1D2 engine installed in the F-117A aircraft has been deleted in accordance with Air Force Message 031600Z Oct 90. Evaluation criteria is being retained for reference and for use as required during special sampling.

The F404-GE-F1D2 engine is not on routine oil analysis. Therefore evaluation of special sampling results may be difficult. If necessary contact cognizant engineering authority for assistance.

ENGINE: F404-GE-F1D2 (AIR FORCE) (Cont.)
AIRCRAFT: (F-117A)

Fe	&	Cr	Mo	V	Main Shaft Bearings
Fe	&	Ag			Main Shaft Cages
Fe	&	Cr			AGB and PTO Bearings
Fe	&	Ag			AGB and PTO Cages
Al					Lube and Scavenge Oil Pump
Fe	&	Ni			AGB and PTO, gears, shafts, splines

1. High Al (more than 10 PPM) on a newly installed engine generally indicates contamination from the oil tank, oil cooler or lube and scavenge pump.

2. Engine should not be operated if Fe content is 12 PPM or higher.

3. Analysis laboratory will report results of analysis performed to the owning laboratory.

ENGINE: JT15D-5B (AIR FORCE)
AIRCRAFT: T-1A

JOAP ATOMIC EMISSION ROTRODE

	Fe	Ag	Al	Cr	Cu	Mg	Na
Abnormal Trend (PPM increase in 10 hours)	4	3	4	3	3	6	2
Normal Range	0-8	0-3	0-6	0-3	0-3	0-7	0-8
Marginal Range	9-11	4-5	7-10	4-6	4-5	8-10	9-10
High Range	12-15	6	11	7-8	6-8	11-14	11
Abnormal	≥16	≥7	≥12	≥9	≥9	≥15	≥12

JOAP ATOMIC EMISSION ROTRODE (Cont.)

	Pb	Ni	Sn	Ti	Si	Mo	B	Zn
Abnormal Trend (PPM increase in 10 hours)	2	6	4	2	3	3	2	2
Normal Range	0-3	0-6	0-19	0-5	0-27	0-5	0-4	0-4
Marginal Range	4-5	7-9	20-22	6	28-30	6-7	5-6	5-6
High Range	6	10-15	23-24	7	31-34	8-11	7	7
Abnormal	≥7	≥16	≥25	≥8	≥35	≥12	≥8	≥8

For NORMAL or MARGINAL range, continue the engine in service and refer to Table 2-2: DECISION MAKING GUIDANCE and maintain a normal sampling interval. For HIGH and ABNORMAL range or ABNORMAL TREND, provide the JOAP laboratory results to the Logistic Support Contractor (LSC) for recommended course of action. (See the notes below.)

ENGINE: JT15D-5B (AIR FORCE) (Cont.)
AIRCRAFT: T-1A

For the HIGH or ABNORMAL range, refer to Table 2-2: DECISION MAKING GUIDANCE and proceed as follows: Provide maintenance personnel with the indicated engine components and advise them to check the engine oil filter element for blockage IAW 1T-1A-2-71GS-00-1. If the filter element is serviceable, continue in service. Perform the following steps after the shortest of the following intervals: between one and three hours of operation maximum, since the initial sample or after the next flight.

a. Analyze a second engine oil sample. If analysis indicates the presence of elements in the MARGINAL or NORMAL ranges, continue the engine in service and maintain a normal sampling interval.
b. Inspect the engine oil filter element IAW 1T-1A-2-71GS-00-1. Advise the LSC of any contamination found.
c. If analysis of the second oil sample indicates the presence of elements in the HIGH or ABNORMAL ranges, perform the following steps.

    1) Obtain and analyze third and fourth engine oil samples during and after a one-hour engine ground run. Take the third sample after 30 minutes of operation and the fourth after the conclusion of the ground run.
    2) Inspect the engine oil filter element IAW 1T-1A-2-71GS-00-1. If the filter element is serviceable, continue in service.
    3) If analysis of the third and fourth samples indicate the presence of elements in the NORMAL range, continue the engine in service and return to the normal sampling interval.
    4) If analysis of the third and fourth samples indicate the presence of elements in the MARGINAL range, continue the engine in service with special sampling intervals.
    5) If analysis of the third and fourth samples indicate the presence of elements in the HIGH or ABNORMAL ranges, provide the JOAP laboratory results to the LSC for a recommended course of action.

Fe	& Mo Cr V MN Si Co W Ni Cu	Nos. 1, 2, 3, 3½ and 4 bearings and associated races.
Fe	& Cr Mn Si Ni Cu Mo	Accessory gearbox driveshaft upper and lower tower shaft bearings.
Ag	& Fe Ni Cr Mn	Nos. 1, 2, 3, 3½, 4 and tower shaft bearing cages.
Fe	& Ni Cr Mn Cu Si Mo	Accessory gearbox and oil pump gears.
Fe	& Cr Mn Si Ni Cu Mo	No. 4 bearing air seal (on LPT rotor).
Al	& Sn Cu Ni	Accessory gearbox plain bearings, oil check valve housings.
Al	& Si Cu Mg	Oil pump housing, upper tower shaft bearing housing.
Al	& Cu Mg Mn	Accessory gearbox scavenge strainer transfer tube.

ENGINE: JT15D-5B (AIR FORCE) (Cont.)
AIRCRAFT: T-1A

NOTES

The first two elements are the two most predominant wear elements (in sequence) for each of the components.

INSPECTION RECOMMENDATIONS

If bearing or keywasher material is found in the filter element and is at or above the normal range, provide the JOAP laboratory results to the LSC for a recommended course of action.

If gear material is found, make sure that procedures in 1T-1A-2-71GS-00-1 are completed and advise the laboratory of the results.

ENGINE: IO-360-C/D
AIRCRAFT: (O-2) (O-3)

JOAP ATOMIC EMISSION ROTRODE

	Fe	Ag	Al	Cr	Cu	Mg	B	Si	Zn
[1]Abnormal Trend (PPM Increase in 10 hrs)	28	3	11	4	8	4			
Normal Range	0-91	0-6	0-36	0-13	0-26	0-13			
Marginal Range	92-112	7	37-44	14-16	27-32	14-16			
High Range	113-139	8-9	45-54	17-19	33-39	17-19			
Abnormal	≥140	≥10	≥55	≥20	≥40	≥20	10	10	10

[1]If the calculated PPM trend value is equal to or greater than the trend PPM value limit, the engine has an abnormal trend.

Increases in Fe and Cr are indicative ring/cylinder wear. Increase in Cu by itself, or in combination with Fe, indicates rod and main bearing discrepancy.

Elevated boron (B) and/or zinc (Zn) concentrations usually indicate contamination with another oil type, primarily MIL-PRF-2104. Recommend resampling and retesting immediately. If new value exceeds 8.0 PPM, run check with D19-0 to ensure proper instrument function. When proper function is confirmed, report both results and suspected contamination with MIL-PRF-2104 to chain of command, maintenance chief, cognizant engineering authority (Army and Navy only), and other personnel as specified by local written procedures. Recommend flushing and retesting of contaminated pre-oilers, carts, or other reservoirs where contamination is found until both B and Zn concentrations fall below 8.0 PPM. Refer to JOAP Manual Volume II Section IX, page 9-1 for more information. Recommend segregation of confirmed or suspected contaminated stocks, and submit information (batch no., lot no., MIL-PRF, nature of problem, etc.) on such stocks through the Defense supply deficiency reporting system.

Elevated silicon (Si) concentration usually indicates contamination with soil, sand, or dust. If aluminum (Al) is also elevated, this suggests the presence of clay or soil. Recommend resampling and retesting immediately. If new value exceeds 8.0 PPM, run check with D19-0 to ensure proper instrument function. When proper function is confirmed, report both results and suspected contamination with soil, sand, or dust to chain of command, maintenance chief, cognizant engineering authority (Army and Navy only), and other personnel as specified by local written procedures. Recommend flushing and retesting of contaminated pre-oilers, carts, or other reservoirs where contamination is found until silicon concentration falls below 8.0 PPM. Refer to JOAP Manual Volume II Section IX, page 9-1 for more information. Recommend segregation of confirmed or suspected contaminated stocks, and submit information (batch no., lot no., MIL-PRF, nature of problem, etc.) on such stocks through the Defense supply deficiency reporting system.

ENGINE: IO-360-C/D (Cont.)
AIRCRAFT: (O-2) (O-3)

NOTES

O-series engines are "wet sump" (oil pan) type engines and oil tank capacity is small. This causes tendency for sample contamination. Frequent oil change interval (50 hours) must be considered when evaluating JOAP results. An orange colored band at the cylinder base indicates chrome plated barrels. Engines thus equipped should be expected to produce high chrome wear metal during break-in period (up to 150 hours), but should decrease and stabilize thereafter. Laboratory personnel should inquire whether engines producing high chrome wear metals are equipped with chrome plated cylinders, and base maintenance recommendations upon this knowledge.

Fe		Push rods, camshaft, cylinder barrels, rocker arms, crankshaft, valve lifters, valve springs, washers.
$\boxed{\text{Fe}}$	Ni + Cr	Oil pump gears, crankshaft cluster gear, governor drive gears, camshaft gears, piston rings
$\boxed{\text{Cu}}$	Pb + Sn	Valve rocker bushings, accessory drive bushings, main bearings, connecting rod bearings
$\boxed{\text{Cu}}$	Sn + Zn	Valve guides, piston pin bushings
$\boxed{\text{Fe}}$	Cr Ni Si + W	Valves
$\boxed{\text{Al}}$	Cu Ni + Mg	Pistons, crankcase, cylinder head
Mg	Cu + Al	Crankcase rear cover

OIL CAPACITY AND CONSUMPTION INFORMATION

1. Oil capacity of the engine is 9 quarts. Minimum 6 quarts required for flight.

2. Allowable oil consumption rates (quantity per time):

   a. At full throttle: 2¾ pints per hour maximum (T.O. 1L-2A-1).

   b. Normal: not to exceed 1½ pints per hour.

   c. Recommended oil consumption inspection interval (if appropriate for your engine): Overhaul determinant; i.e. 900 accumulated hours since last overhaul.

   d. Actions to take if maximum allowable oil consumption rate is exceeded: Overhaul engine.

ENGINE: IO/O-470 (ALL SERIES)
AIRCRAFT: (T-34) (O-1) (U-18)

JOAP ATOMIC EMISSION ROTRODE

	Fe	Ag	[1]Al	[2]Cr	Cu	Mg	B	Si	Zn
Abnormal Trend (PPM Increase in 10 hrs)	26	2	11	6	7	4			
Normal Range	0-85	0-3	0-36	0-21	0-25	0-13			
Marginal Range	86-105	N/A	37-44	22-26	26-31	14-16			
High Range	106-129	4	45-54	27-32	32-38	17-19			
Abnormal	≥130	≥5	≥55 [1]	≥33 [2]	≥39	≥20	10	10	10

[1]See Note 1
[2]See Note 2

Increases in Fe and Cr are indicative of ring/cylinder wear. Increase in Cu alone or in combination with Fe indicates and main bearing discrepancy.

Elevated boron (B) and/or zinc (Zn) concentrations usually indicate contamination with another oil type, primarily MIL-PRF-2104. Recommend resampling and retesting immediately. If new value exceeds 8.0 PPM, run check with D19-0 to ensure proper instrument function. When proper function is confirmed, report both results and suspected contamination with MIL-PRF-2104 to chain of command, maintenance chief, cognizant engineering authority (Army and Navy only), and other personnel as specified by local written procedures. Recommend flushing and retesting of contaminated pre-oilers, carts, or other reservoirs where contamination is found until both B and Zn concentrations fall below 8.0 PPM. Refer to JOAP Manual Volume II Section IX, page 9-1 for more information. Recommend segregation of confirmed or suspected contaminated stocks, and submit information (batch no., lot no., MIL-PRF, nature of problem, etc.) on such stocks through the Defense supply deficiency reporting system.

Elevated silicon (Si) concentration usually indicates contamination with soil, sand, or dust. If aluminum (Al) is also elevated, this suggests the presence of clay or soil. Recommend resampling and retesting immediately. If new value exceeds 8.0 PPM, run check with D19-0 to ensure proper instrument function. When proper function is confirmed, report both results and suspected contamination with soil, sand, or dust to chain of command, maintenance chief, cognizant engineering authority (Army and Navy only), and other personnel as specified by local written procedures. Recommend flushing and retesting of contaminated pre-oilers, carts, or other reservoirs where contamination is found until silicon concentration falls below 8.0 PPM. Refer to JOAP Manual Volume II Section IX, page 9-1 for more information. Recommend segregation of confirmed or suspected contaminated stocks, and submit information (batch no., lot no., MIL-PRF, nature of problem, etc.) on such stocks through the Defense supply deficiency reporting system.

NOTES

1. O-series engines are "wet sump" (oil pan) type engines and oil tank capacity is small. This causes tendency for sample contamination. Frequent oil change interval (25-50 hours) must also be considered when evaluating JOAP results.

ENGINE: IO/O-470 (ALL SERIES) (Cont.)
AIRCRAFT: (T-34) (O-1) (U-18)

2. If engine is new or recently overhauled, chromium concentration may be abnormal due to normal wear-in of chromium rings. During this initial wear-in, iron generally rises to the marginal range with abnormal chromium. Recommend engine oil be drained, flushed, and reserviced after 10 hours of operation to establish a normal wear metal trend baseline. Additional oil changes may be required to rid oil system of contamination if chromium alone continues to rise above abnormal concentration.

Fe		Push rods, camshaft, cylinder barrels, rocker arms, crankshaft valve lifters, valve spring washers, valve springs
Fe	Ni + Cr	Oil pump gears, crankshaft cluster gear, governor drive gears, camshaft gears, piston rings
Cu	Pb + Sn	Valve rocker bushings, accessory drive bushings, main bearings, connecting rod bearings
Cu	Sn + Zn	Valve guides, piston pin bushings
Mg	Cu + Al	Crankcase rear cover
Fe	Cr Ni Si + W	Valves
Al	Cu Ni + Mg	Pistons, crankcase, cylinder head
Ag		Bearings

ENGINE: O-470-4 (NAVY)
AIRCRAFT: (T-34B)

JOAP ATOMIC EMISSION ROTRODE

	Fe	Ag	[1]Al	Cr	Cu	Mg	B	Si	Zn
Abnormal Trend (PPM Increase in 10 hrs)	13		12 23 [1]		9				
Normal Range	0-64		0-40 0-76 [1]		0-30				
Marginal Range	65-78		41-50 77-96 [1]		31-36				
High Range	79-91		51-59 97-115 [1]		37-46				
Abnormal	≥92		≥60 ≥116 [1]		≥47		10	10	10

[1]For newly reworked engine with other metal normal (up to 150-200 operating hours after overhaul).

Increases in Fe and Al are indicative of upper cylinder problems. Increase in Cu or in combination with Fe indicates rod and main bearing wear.

Elevated boron (B) and/or zinc (Zn) concentrations usually indicate contamination with another oil type, primarily MIL-PRF-2104. Recommend resampling and retesting immediately. If new value exceeds 8.0 PPM, run check with D19-0 to ensure proper instrument function. When proper function is confirmed, report both results and suspected contamination with MIL-PRF-2104 to chain of command, maintenance chief, cognizant engineering authority (Army and Navy only), and other personnel as specified by local written procedures. Recommend flushing and retesting of contaminated pre-oilers, carts, or other reservoirs where contamination is found until both B and Zn concentrations fall below 8.0 PPM. Refer to JOAP Manual Volume II Section IX, page 9-1 for more information. Recommend segregation of confirmed or suspected contaminated stocks, and submit information (batch no., lot no., MIL-PRF, nature of problem, etc.) on such stocks through the Defense supply deficiency reporting system.

Elevated silicon (Si) concentration usually indicates contamination with soil, sand, or dust. If aluminum (Al) is also elevated, this suggests the presence of clay or soil. Recommend resampling and retesting immediately. If new value exceeds 8.0 PPM, run check with D19-0 to ensure proper instrument function. When proper function is confirmed, report both results and suspected contamination with soil, sand, or dust to chain of command, maintenance chief, cognizant engineering authority (Army and Navy only), and other personnel as specified by local written procedures. Recommend flushing and retesting of contaminated pre-oilers, carts, or other reservoirs where contamination is found until silicon concentration falls below 8.0 PPM. Refer to JOAP Manual Volume II Section IX, page 9-1 for more information. Recommend segregation of confirmed or suspected contaminated stocks, and submit information (batch no., lot no., MIL-PRF, nature of problem, etc.) on such stocks through the Defense supply deficiency reporting system.

Fe	Push rods, camshaft, cylinder barrels, rocker arms, crankshaft valve lifters, valve spring washers, valve springs
Fe Ni + Cr	Oil pump gears, crankshaft cluster gear, governor drive gears, camshaft gears, piston rings

ENGINE: O-470-4 (NAVY) (Cont.)
AIRCRAFT: (T-34B)

Cu	Pb + Sn	Valve rocker bushings, accessory drive bushings, main bearings, connecting rod bearings
Cu	Sn + Zn	Valve guides, piston pin bushings
Fe	Cr Ni Si + W	Valves
Al	Cu Ni + Mg	Pistons, crankcase, cylinder head
Mg	Cu + Al	Crankcase rear cover

ENGINE: O-480
AIRCRAFT: (U-4)

JOAP ATOMIC EMISSION ROTRODE

	Fe	Ag	Al	Cr	Cu	Mg	B	Si	Zn
Abnormal Trend (PPM Increase in 10 hrs)	21	2	9	20	10	4			
Normal Range	0-72	0-3	0-30	0-65	0-33	0-14			
Marginal Range	73-88	N/A	31-37	66-80	34-40	15-17			
High Range	89-109	4	38-44	81-99	41-49	18-21			
Abnormal	≥110	≥5	≥45	≥100	≥50	≥22	10	10	10

High Al and/or Fe may indicate trouble in rocker boxes. Valve springs may be cutting into retainers, or thrust washers on rocker shaft may be wearing into side of rocker box.

Elevated boron (B) and/or zinc (Zn) concentrations usually indicate contamination with another oil type, primarily MIL-PRF-2104. Recommend resampling and retesting immediately. If new value exceeds 8.0 PPM, run check with D19-0 to ensure proper instrument function. When proper function is confirmed, report both results and suspected contamination with MIL-PRF-2104 to chain of command, maintenance chief, cognizant engineering authority (Army and Navy only), and other personnel as specified by local written procedures. Recommend flushing and retesting of contaminated pre-oilers, carts, or other reservoirs where contamination is found until both B and Zn concentrations fall below 8.0 PPM. Refer to JOAP Manual Volume II Section IX, page 9-1 for more information. Recommend segregation of confirmed or suspected contaminated stocks, and submit information (batch no., lot no., MIL-PRF, nature of problem, etc.) on such stocks through the Defense supply deficiency reporting system.

Elevated silicon (Si) concentration usually indicates contamination with soil, sand, or dust. If aluminum (Al) is also elevated, this suggests the presence of clay or soil. Recommend resampling and retesting immediately. If new value exceeds 8.0 PPM, run check with D19-0 to ensure proper instrument function. When proper function is confirmed, report both results and suspected contamination with soil, sand, or dust to chain of command, maintenance chief, cognizant engineering authority (Army and Navy only), and other personnel as specified by local written procedures. Recommend flushing and retesting of contaminated pre-oilers, carts, or other reservoirs where contamination is found until silicon concentration falls below 8.0 PPM. Refer to JOAP Manual Volume II Section IX, page 9-1 for more information. Recommend segregation of confirmed or suspected contaminated stocks, and submit information (batch no., lot no., MIL-PRF, nature of problem, etc.) on such stocks through the Defense supply deficiency reporting system.

Fe	Cu		Bearing wear
Fe	Cr	Al	Rings, Piston, Cylinder wear

NOTES

O-series engines are "wet sump" (oil pan) type engines and oil tank capacity is small. This causes tendency for sample contamination. Frequent oil change interval (25-50 hours) must also be considered when evaluating JOAP results

HUNTER HFE ENGINES
INTERPRETATION AND CORRECTIVE ACTION GUIDE

Table A-1. Corrective Action Codes

OK	No action required. Oil sample is within acceptable tolerances.
C	Change oil and oil filter
E	Replace engine. Send removed engine to depot for evaluation.

ANALYSIS PARAMETER	VISCOSITY Kv100Cst		TBN D4739*		TBN D2896		TAN D664		OXIDATION / NITRATION (FT-IR)	
Normal Range	11 – 18	OK	>4	OK	>6	OK	<1	OK	<1	OK
Borderline Range**	18 – 20	OK	2 – 4	OK	4 – 6	OK	1 – 3	OK	10 – 25	OK
Warning Range	<10 or >20	C	<2	C	<4	C	>3	C	>25	C

* If new TBN is known, the warning range is a reduction greater than 50%.
** Ok for continued use. The next oil sample, however, will likely fall in the warning range requiring an oil and filter change.

Recommended Oil Analysis Wear Metal Limits *

Wear Metal (PPM)	Aluminum (Al)		Chromium (Cr)		Copper (Cu)		Iron (Fe)		Lead (Pb)		Nickel (Ni)		Tin (Sn)	
Normal	<10	OK	<5	OK	<10	OK	<100	OK	<20	OK	<5	OK	<10	OK
Borderline Range	9 - 19	C	4 – 14	C	11 – 25	C	101 – 199	C	21 – 49	C	6 – 10	C	11 - 25	C
Warning	>20	E	>15	E	>25	E	>200	E	>50	E	>10	E	>25	E

Recommended Oil Analysis Contamination Limits *

Analysis Parameter	Dirt (Silicon, PPM)		%Soot (Weight)		Coolant (PPM)						%Water (Volume)		%Fuel (Volume)	
					Potassium (K)		Sodium (Na)		Glycol					
Normal	<25	OK	<3	OK	<20	OK	<40	OK	<20	OK	<.25	OK	<2	OK
Borderline	>25	C	>3	C	>20	OK	>40	C	>20	C	>.25	C	>2	C
Warning	>50	C***	>6	C***	>50	E	>100	E	>50	E	>.5	E	>5	E

*** Some parameters are interactive. The presence of any combination of the below requires engine removal and return to the depot for evaluation:
1). Fe in the borderline range AND Cr in the borderline range AND Silicon.
2). Pb in the borderline range AND Sn in the borderline range.
3). Fe in the borderline range AND soot.

AH-1W, HH-1N, UH-1N (NAVY)
MAIN GEARBOX

JOAP ATOMIC EMISSION ROTRODE

	Fe	Ag	Al	Cr	Cu	Mg	B	Si	Zn
Abnormal Trend (PPM Increase in 10 hrs)	16				5	8			
Normal Range	0-52				0-17	0-24			
Marginal Range	53-64				18-21	25-29			
High Range	65-79				22-25	30-36			
Abnormal	≥80				≥26	≥37	10	10	10

WATER LIMIT: 1,000 PPM on 0.100% (dependent on special equipment availability at lab)

Elevated boron (B) and/or zinc (Zn) concentrations usually indicate contamination with another oil type, primarily MIL-PRF-2104. Recommend resampling and retesting immediately. If new value exceeds 8.0 PPM, run check with D19-0 to ensure proper instrument function. When proper function is confirmed, report both results and suspected contamination with MIL-PRF-2104 to chain of command, maintenance chief, cognizant engineering authority (Army and Navy only), and other personnel as specified by local written procedures. Recommend flushing and retesting of contaminated pre-oilers, carts, or other reservoirs where contamination is found until both B and Zn concentrations fall below 8.0 PPM. Refer to JOAP Manual Volume II Section IX, page 9-1 for more information. Recommend segregation of confirmed or suspected contaminated stocks, and submit information (batch no., lot no., MIL-PRF, nature of problem, etc.) on such stocks through the Defense supply deficiency reporting system.

Elevated silicon (Si) concentration usually indicates contamination with soil, sand, or dust. If aluminum (Al) is also elevated, this suggests the presence of clay or soil. Recommend resampling and retesting immediately. If new value exceeds 8.0 PPM, run check with D19-0 to ensure proper instrument function. When proper function is confirmed, report both results and suspected contamination with soil, sand, or dust to chain of command, maintenance chief, cognizant engineering authority (Army and Navy only), and other personnel as specified by local written procedures. Recommend flushing and retesting of contaminated pre-oilers, carts, or other reservoirs where contamination is found until silicon concentration falls below 8.0 PPM. Refer to JOAP Manual Volume II Section IX, page 9-1 for more information. Recommend segregation of confirmed or suspected contaminated stocks, and submit information (batch no., lot no., MIL-PRF, nature of problem, etc.) on such stocks through the Defense supply deficiency reporting system.

AH-1W, HH-1N, UH-1N (NAVY)
42° INTERMEDIATE GEARBOX

JOAP ATOMIC EMISSION ROTRODE

	Fe	Ag	Al	Cr	Cu	Mg	B	Si	Zn
Abnormal Trend (PPM Increase in 10 hrs)	20				16	12			
Normal Range	0-72				0-54	0-40			
Marginal Range	73-88				55-66	41-50			
High Range	89-108				67-80	51-58			
Abnormal	≥109				≥81	≥59	10	10	10

WATER LIMIT: 1,000 PPM on 0.100% (dependent on special equipment availability at lab)

Elevated boron (B) and/or zinc (Zn) concentrations usually indicate contamination with another oil type, primarily MIL-PRF-2104. Recommend resampling and retesting immediately. If new value exceeds 8.0 PPM, run check with D19-0 to ensure proper instrument function. When proper function is confirmed, report both results and suspected contamination with MIL-PRF-2104 to chain of command, maintenance chief, cognizant engineering authority (Army and Navy only), and other personnel as specified by local written procedures. Recommend flushing and retesting of contaminated pre-oilers, carts, or other reservoirs where contamination is found until both B and Zn concentrations fall below 8.0 PPM. Refer to JOAP Manual Volume II Section IX, page 9-1 for more information. Recommend segregation of confirmed or suspected contaminated stocks, and submit information (batch no., lot no., MIL-PRF, nature of problem, etc.) on such stocks through the Defense supply deficiency reporting system.

Elevated silicon (Si) concentration usually indicates contamination with soil, sand, or dust. If aluminum (Al) is also elevated, this suggests the presence of clay or soil. Recommend resampling and retesting immediately. If new value exceeds 8.0 PPM, run check with D19-0 to ensure proper instrument function. When proper function is confirmed, report both results and suspected contamination with soil, sand, or dust to chain of command, maintenance chief, cognizant engineering authority (Army and Navy only), and other personnel as specified by local written procedures. Recommend flushing and retesting of contaminated pre-oilers, carts, or other reservoirs where contamination is found until silicon concentration falls below 8.0 PPM. Refer to JOAP Manual Volume II Section IX, page 9-1 for more information. Recommend segregation of confirmed or suspected contaminated stocks, and submit information (batch no., lot no., MIL-PRF, nature of problem, etc.) on such stocks through the Defense supply deficiency reporting system.

AH-1W, HH-1N, UH-1N (NAVY)
90° TAIL ROTOR GEARBOX

JOAP ATOMIC EMISSION ROTRODE

	Fe	Ag	Al	Cr	Cu	Mg	B	Si	Zn
Abnormal Trend (PPM Increase in 10 hrs)	30				45	12			
Normal Range	0-100				0-150	0-40			
Marginal Range	101-124				151-185	41-50			
High Range	125-152				186-218	51-59			
Abnormal	≥153				≥219	≥60	10	10	10

WATER LIMIT: 1,000 PPM on 0.100% (dependent on special equipment availability at lab)

Elevated boron (B) and/or zinc (Zn) concentrations usually indicate contamination with another oil type, primarily MIL-PRF-2104. Recommend resampling and retesting immediately. If new value exceeds 8.0 PPM, run check with D19-0 to ensure proper instrument function. When proper function is confirmed, report both results and suspected contamination with MIL-PRF-2104 to chain of command, maintenance chief, cognizant engineering authority (Army and Navy only), and other personnel as specified by local written procedures. Recommend flushing and retesting of contaminated pre-oilers, carts, or other reservoirs where contamination is found until both B and Zn concentrations fall below 8.0 PPM. Refer to JOAP Manual Volume II Section IX, page 9-1 for more information. Recommend segregation of confirmed or suspected contaminated stocks, and submit information (batch no., lot no., MIL-PRF, nature of problem, etc.) on such stocks through the Defense supply deficiency reporting system.

Elevated silicon (Si) concentration usually indicates contamination with soil, sand, or dust. If aluminum (Al) is also elevated, this suggests the presence of clay or soil. Recommend resampling and retesting immediately. If new value exceeds 8.0 PPM, run check with D19-0 to ensure proper instrument function. When proper function is confirmed, report both results and suspected contamination with soil, sand, or dust to chain of command, maintenance chief, cognizant engineering authority (Army and Navy only), and other personnel as specified by local written procedures. Recommend flushing and retesting of contaminated pre-oilers, carts, or other reservoirs where contamination is found until silicon concentration falls below 8.0 PPM. Refer to JOAP Manual Volume II Section IX, page 9-1 for more information. Recommend segregation of confirmed or suspected contaminated stocks, and submit information (batch no., lot no., MIL-PRF, nature of problem, etc.) on such stocks through the Defense supply deficiency reporting system.

UH-1N (NAVY)
T400 COMBINING GEARBOX

JOAP ATOMIC EMISSION ROTRODE

	Fe	Ag	Al	Cr	Cu	Mg	B	Si	Zn
Abnormal Trend (PPM Increase in 10 hrs)	5	2			3	5			
Normal Range	0-16	0-6			0-10	0-17			
Marginal Range	17-19	7			11-12	18-21			
High Range	20-24	8-9			13-14	22-25			
Abnormal	≥25	10+			≥15	≥26	10	10	10

WATER LIMIT: 1,000 PPM on 0.100% (dependent on special equipment availability at lab)

Elevated boron (B) and/or zinc (Zn) concentrations usually indicate contamination with another oil type, primarily MIL-PRF-2104. Recommend resampling and retesting immediately. If new value exceeds 8.0 PPM, run check with D19-0 to ensure proper instrument function. When proper function is confirmed, report both results and suspected contamination with MIL-PRF-2104 to chain of command, maintenance chief, cognizant engineering authority (Army and Navy only), and other personnel as specified by local written procedures. Recommend flushing and retesting of contaminated pre-oilers, carts, or other reservoirs where contamination is found until both B and Zn concentrations fall below 8.0 PPM. Refer to JOAP Manual Volume II Section IX, page 9-1 for more information. Recommend segregation of confirmed or suspected contaminated stocks, and submit information (batch no., lot no., MIL-PRF, nature of problem, etc.) on such stocks through the Defense supply deficiency reporting system.

Elevated silicon (Si) concentration usually indicates contamination with soil, sand, or dust. If aluminum (Al) is also elevated, this suggests the presence of clay or soil. Recommend resampling and retesting immediately. If new value exceeds 8.0 PPM, run check with D19-0 to ensure proper instrument function. When proper function is confirmed, report both results and suspected contamination with soil, sand, or dust to chain of command, maintenance chief, cognizant engineering authority (Army and Navy only), and other personnel as specified by local written procedures. Recommend flushing and retesting of contaminated pre-oilers, carts, or other reservoirs where contamination is found until silicon concentration falls below 8.0 PPM. Refer to JOAP Manual Volume II Section IX, page 9-1 for more information. Recommend segregation of confirmed or suspected contaminated stocks, and submit information (batch no., lot no., MIL-PRF, nature of problem, etc.) on such stocks through the Defense supply deficiency reporting system.

H-1 (ALL SERIES) (ARMY AND AIR FORCE)
TRANSMISSION

JOAP ATOMIC EMISSION ROTRODE

	Fe	Ag	Al	Cr	Cu	Mg	B	Si	Zn
Abnormal Trend (PPM Increase in 10 hrs)	6	2	7	2	4	3		7	
Normal Range	0-21	0-3	0-25	0-3	0-13	0-8		0-23	
Marginal Range	22-26	N/A	26-31	4	14-16	9		24-28	
High Range	27-31	4	32-38	5	17-19	10-11		29-34	
Abnormal	≥32	≥5	≥39	≥6	≥20	≥12	10	≥35	10

Fe	Bearing load surface, main drive, Accessory gearing and splines
Fe & Cu	Bearing assemblies Mast and input quill bearing assembly
Fe Cu & Ag	Input and output quill bearing assemblies
Fe & Al	Lower mast bearing oil distribution ring
Fe & Mg	Gearing and housing
Al	Oil deflector plate input quill

Elevated boron (B) and/or zinc (Zn) concentrations usually indicate contamination with another oil type, primarily MIL-PRF-2104. Recommend resampling and retesting immediately. If new value exceeds 8.0 PPM, run check with D19-0 to ensure proper instrument function. When proper function is confirmed, report both results and suspected contamination with MIL-PRF-2104 to chain of command, maintenance chief, cognizant engineering authority (Army and Navy only), and other personnel as specified by local written procedures. Recommend flushing and retesting of contaminated pre-oilers, carts, or other reservoirs where contamination is found until both B and Zn concentrations fall below 8.0 PPM. Refer to JOAP Manual Volume II Section IX, page 9-1 for more information. Recommend segregation of confirmed or suspected contaminated stocks, and submit information (batch no., lot no., MIL-PRF, nature of problem, etc.) on such stocks through the Defense supply deficiency reporting system.

NOTES

High concentration of Fe & Mg should be expected to increase after extended periods of inactivity because of corrosion.
Mast bearing shims manufactured from Al are being replaced with steel counterpart at overhaul.
High Si indicates contamination probably due to sampling error.

H-1 (ALL SERIES) (ARMY AND AIR FORCE)
42° INTERMEDIATE GEARBOX

JOAP ATOMIC EMISSION ROTRODE

	Fe	Ag	Al	Cr	Cu	Mg	B	Si	Zn
Abnormal Trend (PPM Increase in 10 hrs)	12		4	2	7	10		15	
Normal Range	0-40		0-14	0-5	0-24	0-33		0-48	
Marginal Range	41-49		15-17	6	25-29	34-40		49-59	
High Range	50-61		18-21	7	30-36	41-49		60-74	
Abnormal	≥62		≥22	≥8	≥37	≥50	10	≥75	10

Fe	Bevel gears and bearing load surfaces
Fe & Cu	Bevel gears and bearing assembly
Fe Cu & Al	Bearing assembly and liners
Fe & Al	Bearing liners in quill plate
Fe Al & Mg	Gearing and case

Elevated boron (B) and/or zinc (Zn) concentrations usually indicate contamination with another oil type, primarily MIL-PRF-2104. Recommend resampling and retesting immediately. If new value exceeds 8.0 PPM, run check with D19-0 to ensure proper instrument function. When proper function is confirmed, report both results and suspected contamination with MIL-PRF-2104 to chain of command, maintenance chief, cognizant engineering authority (Army and Navy only), and other personnel as specified by local written procedures. Recommend flushing and retesting of contaminated pre-oilers, carts, or other reservoirs where contamination is found until both B and Zn concentrations fall below 8.0 PPM. Refer to JOAP Manual Volume II Section IX, page 9-1 for more information. Recommend segregation of confirmed or suspected contaminated stocks, and submit information (batch no., lot no., MIL-PRF, nature of problem, etc.) on such stocks through the Defense supply deficiency reporting system.

NOTES

1. Tail rotor or drive line vibration may induce temporary high concentration of Fe, Cu & Al.

2. Fe, Cu & Mg should be expected to increase sharply after extended periods of inactivity because of corrosion.

3. Ag has been reported to occur in some gearboxes at very high levels. Silver in these cases was used as a gear flashing to establish wear patterns for gear tracking and should not be considered as a critical wear metal.

H-1 (ALL SERIES) (ARMY AND AIR FORCE)
90° TAIL ROTOR GEARBOX

JOAP ATOMIC EMISSION ROTRODE

	Fe	Ag	Al	Cr	Cu	Mg	B	Si	Zn
Abnormal Trend (PPM Increase in 10 hrs)	26		10	4	26	15		20	
Normal Range	0-85		0-35	0-10	0-85	0-48		0-65	
Marginal Range	86-105		36-43	11-12	86-105	49-59		66-80	
High Range	106-129		44-52	13-15	106-129	60-74		81-99	
Abnormal	≥130		≥53	≥16	≥130	≥75	10	≥100	10

Fe	Bevel gears and bearing load surfaces
Fe Cu & Al	Bearing assembly and liners
Fe & Al	Bearing liners in quill plate
Fe Al & Mg	Gearing and case

Elevated boron (B) and/or zinc (Zn) concentrations usually indicate contamination with another oil type, primarily MIL-PRF-2104. Recommend resampling and retesting immediately. If new value exceeds 8.0 PPM, run check with D19-0 to ensure proper instrument function. When proper function is confirmed, report both results and suspected contamination with MIL-PRF-2104 to chain of command, maintenance chief, cognizant engineering authority (Army and Navy only), and other personnel as specified by local written procedures. Recommend flushing and retesting of contaminated pre-oilers, carts, or other reservoirs where contamination is found until both B and Zn concentrations fall below 8.0 PPM. Refer to JOAP Manual Volume II Section IX, page 9-1 for more information. Recommend segregation of confirmed or suspected contaminated stocks, and submit information (batch no., lot no., MIL-PRF, nature of problem, etc.) on such stocks through the Defense supply deficiency reporting system.

NOTES

1. Temporary high concentration of Fe, Cu and Al may result from tail rotor or drive line vibration.
2. The concentration of Fe, Al & Mg should be expected to increase sharply after extended periods of inactivity because of corrosion.
3. High concentration of Fe, Cu & Mg may result from excessive lubrication of tail rotor cross head bearing forcing grease and external debris into contact with gearbox oil. Flushing overcomes the problem but requires a 10 minute ground operation following each drain and reservice.
4. Inspect the aluminum wool in the filter cap for deterioration when excessive aluminum wear metal is detected in oil samples.

SH-2G (NAVY)
MAIN GEARBOX

JOAP ATOMIC EMISSION ROTRODE

	Fe	Ag	Al	Cr	Cu	Mg	Ni	Ti	B	Si	Zn
Abnormal Trend (PPM Increase in 10 hrs)	17		4		6	10	6	6			
Normal Range	0-60		0-12		0-20	0-18	0-18	0-18			
Marginal Range	61-70		13-15		21-25	19-22	19-22	19-22			
High Range	71-86		16-17		26-30	23-26	23-26	23-26			
Abnormal	≥87		≥18		≥31	≥27	≥27	≥27	10	10	10

WATER LIMIT: 1,000 PPM on 0.100% (dependent on special equipment availability at lab)

The main gearbox shares a common oil system with the combining gearbox with oil filters both in the oil pump and in the scavenge oil return line. Normal wear particles will continue to increase until the gearbox is drained, flushed and reserviced in accordance with NAVAIR 01-260HCD-2-4.1. Water in the oil will cause high iron and magnesium because of corrosion. When high or abnormal wear metals are detected and/or the water content of the oil exceeds 1,000 PPM (0.100%)*, the laboratory recommendation should be "flush gearbox, reservice and perform serviceability check in accordance with NAVAIR 01-260HCD-2-4.1. Submit oil sample after serviceability check and special oil sample after 10 flight hours of operation for both wear metals and water content."

*Water content check dependent on special equipment availability.

High metal readings without exceeding 100 PPM water content may result in a laboratory recommendation for flushing or removal of the gearbox. A minimum of two consecutive high readings is required prior to recommending flushing or gearbox removal unless secondary indications (chips, unusual noise, etc.) are present. Inform CFA when recommending flushing. CFA concurrence is required prior to recommending gearbox removal. Furnish CFA with five previous NOAP readings when recommending gearbox removal. CFA is NOAP readings when recommending gearbox removal.

Elevated boron (B) and/or zinc (Zn) concentrations usually indicate contamination with another oil type, primarily MIL-PRF-2104. Recommend resampling and retesting immediately. If new value exceeds 8.0 PPM, run check with D19-0 to ensure proper instrument function. When proper function is confirmed, report both results and suspected contamination with MIL-PRF-2104 to chain of command, maintenance chief, cognizant engineering authority (Army and Navy only), and other personnel as specified by local written procedures. Recommend flushing and retesting of contaminated pre-oilers, carts, or other reservoirs where contamination is found until both B and Zn concentrations fall below 8.0 PPM. Refer to JOAP Manual Volume II Section IX, page 9-1 for more information.

SH-2G (NAVY) (Cont.)
MAIN GEARBOX

Recommend segregation of confirmed or suspected contaminated stocks, and submit information (batch no., lot no., MIL-PRF, nature of problem, etc.) on such stocks through the Defense supply deficiency reporting system.

Elevated silicon (Si) concentration usually indicates contamination with soil, sand, or dust. If aluminum (Al) is also elevated, this suggests the presence of clay or soil. Recommend resampling and retesting immediately. If new value exceeds 8.0 PPM, run check with D19-0 to ensure proper instrument function. When proper function is confirmed, report both results and suspected contamination with soil, sand, or dust to chain of command, maintenance chief, cognizant engineering authority (Army and Navy only), and other personnel as specified by local written procedures. Recommend flushing and retesting of contaminated pre-oilers, carts, or other reservoirs where contamination is found until silicon concentration falls below 8.0 PPM. Refer to JOAP Manual Volume II Section IX, page 9-1 for more information. Recommend segregation of confirmed or suspected contaminated stocks, and submit information (batch no., lot no., MIL-PRF, nature of problem, etc.) on such stocks through the Defense supply deficiency reporting system.

SH-2G (NAVY)
INTERMEDIATE GEARBOX

JOAP ATOMIC EMISSION ROTRODE

	Fe	Ag	Al	Cr	Cu	Mg	B	Si	Zn
Abnormal Trend (PPM Increase in 10 hrs)	16		8		6	10			
Normal Range	0-54		0-25		0-20	0-26			
Marginal Range	55-64		26-31		21-25	27-32			
High Range	65-80		32-37		26-30	33-39			
Abnormal	≥81		≥38		≥31	≥40	10	10	10

WATER LIMIT: 1,000 PPM on 0.100% (dependent on special equipment availability at lab)

The intermediate gearbox has a self-contained oil system without an oil filter. Normal wear particles will continue to increase until the gearbox is drained, flushed and re-serviced in accordance with NAVAIR 01-260HCD-2-4.1. Water in the oil will cause high iron and magnesium because of corrosion. When high or abnormal wear metal readings are obtained, check the oil for water content. If high or abnormal wear metals are detected and/or the water content of the oil exceeds 1,000 PPM (0.100%)*, the laboratory recommendation should be "flush gearbox, re-service and perform serviceability check in accordance with NAVAIR 01-260HCD-2-4.1. Submit oil sample after serviceability check and special oil sample after 10 flight hours of operation for both wear metals and water content."

*Water content check dependent on special equipment availability.

High metal readings without exceeding 1000 PPM water content may result in a laboratory recommendation for flushing or removal of the gearbox. A minimum of two consecutive high readings is required prior to recommending flushing or gearbox removal. Furnish CFA with five previous NOAP readings when recommending gearbox removal.

Elevated boron (B) and/or zinc (Zn) concentrations usually indicate contamination with another oil type, primarily MIL-PRF-2104. Recommend resampling and retesting immediately. If new value exceeds 8.0 PPM, run check with D19-0 to ensure proper instrument function. When proper function is confirmed, report both results and suspected contamination with MIL-PRF-2104 to chain of command, maintenance chief, cognizant engineering authority (Army and Navy only), and other personnel as specified by local written procedures. Recommend flushing and retesting of contaminated pre-oilers, carts, or other reservoirs where contamination is found until both B and Zn concentrations fall below 8.0 PPM. Refer to JOAP Manual Volume II Section IX, page 9-1 for more information. Recommend segregation of confirmed or suspected contaminated stocks, and submit information (batch no., lot no., MIL-PRF, nature of problem, etc.) on such stocks through the Defense supply deficiency reporting system.

Elevated silicon (Si) concentration usually indicates contamination with soil, sand, or dust. If aluminum (Al) is also elevated, this suggests the presence of clay or soil.

SH-2G (NAVY) (Cont.)
INTERMEDIATE GEARBOX

Recommend resampling and retesting immediately. If new value exceeds 8.0 PPM, run check with D19-0 to ensure proper instrument function. When proper function is confirmed, report both results and suspected contamination with soil, sand, or dust to chain of command, maintenance chief, cognizant engineering authority (Army and Navy only), and other personnel as specified by local written procedures. Recommend flushing and retesting of contaminated pre-oilers, carts, or other reservoirs where contamination is found until silicon concentration falls below 8.0 PPM. Refer to JOAP Manual Volume II Section IX, page 9-1 for more information. Recommend segregation of confirmed or suspected contaminated stocks, and submit information (batch no., lot no., MIL-PRF, nature of problem, etc.) on such stocks through the Defense supply deficiency reporting system.

SH-2G (NAVY)
TAIL ROTOR GEARBOX

JOAP ATOMIC EMISSION ROTRODE

	Fe	Ag	Al	Cr	Cu	Mg	B	Si	Zn
Abnormal Trend (PPM Increase in 10 hrs)	17		4		6	10			
Normal Range	0-60		0-12		0-20	0-18			
Marginal Range	61-70		13-15		21-25	19-22			
High Range	71-86		16-17		26-30	23-26			
Abnormal	≥87		≥18		≥31	≥27	10	10	10

WATER LIMIT: 1,000 PPM on 0.100% (dependent on special equipment availability at lab)

The tail rotor gearbox has a self-contained gearbox without an oil filter. Normal wear particles will continue to increase until the gearbox is drained, flushed and reserviced in accordance with NAVAIR 01-260HCD-2-4.1. Water in the oil will cause either high iron and copper or high iron, copper, magnesium and aluminum because of corrosion. When high or abnormal wear metal readings are obtained, check the oil for water content. If high or abnormal wear metals are detected and/or the water content of the oil exceeds 1,000 (0.100%)*, the laboratory recommendation should be "flush gearbox, reservice and perform serviceability check in accordance with NAVAIR 01-260HCD-2-4.1. Submit oil sample after serviceability check and special oil sample after 10 flight hours of operation for both wear metals and water content."

High metal readings without exceeding 1000 PPM water content may result in a laboratory recommendation for flushing or removal of the gearbox. A minimum of two consecutive high readings is required prior to recommending flushing or gearbox removal unless secondary indications (chips, unusual noise, etc.) are present. Inform CFA when recommending flushing. CFA concurrence is required prior to recommending gearbox removal. Furnish CFA with five previous NOAP readings when recommending gearbox removal.

Elevated boron (B) and/or zinc (Zn) concentrations usually indicate contamination with another oil type, primarily MIL-PRF-2104. Recommend resampling and retesting immediately. If new value exceeds 8.0 PPM, run check with D19-0 to ensure proper instrument function. When proper function is confirmed, report both results and suspected contamination with MIL-PRF-2104 to chain of command, maintenance chief, cognizant engineering authority (Army and Navy only), and other personnel as specified by local written procedures. Recommend flushing and retesting of contaminated pre-oilers, carts, or other reservoirs where contamination is found until both B and Zn concentrations fall below 8.0 PPM. Refer to JOAP Manual Volume II Section IX, page 9-1 for more information. Recommend segregation of confirmed or suspected contaminated stocks, and submit information (batch no., lot no., MIL-PRF, nature of problem, etc.) on such stocks through the Defense supply deficiency reporting system

SH-2G (NAVY) (Cont.)
TAIL ROTOR GEARBOX

Elevated silicon (Si) concentration usually indicates contamination with soil, sand, or dust. If aluminum (Al) is also elevated, this suggests the presence of clay or soil. Recommend resampling and retesting immediately. If new value exceeds 8.0 PPM, run check with D19-0 to ensure proper instrument function. When proper function is confirmed, report both results and suspected contamination with soil, sand, or dust to chain of command, maintenance chief, cognizant engineering authority (Army and Navy only), and other personnel as specified by local written procedures. Recommend flushing and retesting of contaminated pre-oilers, carts, or other reservoirs where contamination is found until silicon concentration falls below 8.0 PPM. Refer to JOAP Manual Volume II Section IX, page 9-1 for more information. Recommend segregation of confirmed or suspected contaminated stocks, and submit information (batch no., lot no., MIL-PRF, nature of problem, etc.) on such stocks through the Defense supply deficiency reporting system.

SH-2G (NAVY)
COMBINING GEARBOX

JOAP ATOMIC EMISSION ROTRODE

	Fe	Ag	Al	Cr	Cu	Mg	Ni	B	Si	Zn
Abnormal Trend (PPM Increase in 10 hrs)	17		4		6	10	6			
Normal Range	0-60		0-12		0-20	0-18	0-18			
Marginal Range	61-70		13-15		21-25	19-22	19-22			
High Range	71-86		16-17		26-30	23-26	23-26			
Abnormal	≥87		≥18		≥31	≥27	≥27	10	10	10

WATER LIMIT: 1,000 PPM on 0.100% (if equipment is available at lab)

The combining gearbox shares a common oil system with the main gearbox with oil filters both in the oil pump and in the scavenge oil return line. Normal wear particles will continue to increase until the gearbox is drained, flushed and reserviced in accordance with NAVAIR 01-260HCD-2-4.1. Water in the oil will cause high iron and magnesium because of corrosion. When high or abnormal wear metal readings are obtained, check the oil for water content. If high or abnormal wear metals are detected and/or the water content of the oil exceeds 1,000 (0.100%)*, the laboratory recommendation should be "flush gearbox, reservice and perform serviceability check in accordance with NAVAIR 01-260HCD-2-4.1. Submit oil sample after serviceability check and special oil sample after 10 flight hours of operation for both wear metals and water content."

*Water content check dependent on special equipment availability.

High metal readings without exceeding 1000 PPM water content may result in a laboratory recommendation for flushing or removal of the gearbox. A minimum of two consecutive high readings is required prior to recommending flushing or gearbox removal unless secondary indications (chips, unusual noise, etc.) are present. Inform CFA when recommending flushing. CFA concurrence is required prior to recommending gearbox removal. Furnish CFA with five previous NOAP readings when recommending gearbox removal.

Elevated boron (B) and/or zinc (Zn) concentrations usually indicate contamination with another oil type, primarily MIL-PRF-2104. Recommend resampling and retesting immediately. If new value exceeds 8.0 PPM, run check with D19-0 to ensure proper instrument function. When proper function is confirmed, report both results and suspected contamination with MIL-PRF-2104 to chain of command, maintenance chief, cognizant engineering authority (Army and Navy only), and other personnel as specified by local written procedures. Recommend flushing and retesting of contaminated pre-oilers, carts, or other reservoirs where contamination is found until both B and Zn concentrations fall below 8.0 PPM. Refer to JOAP Manual Volume II Section IX, page 9-1 for more information. Recommend segregation of confirmed or suspected contaminated stocks, and submit information (batch no., lot no., MIL-PRF, nature of problem, etc.) on such stocks through the Defense supply deficiency reporting system.

SH-2G (NAVY) (Cont.)
COMBINING GEARBOX

Elevated silicon (Si) concentration usually indicates contamination with soil, sand, or dust. If aluminum (Al) is also elevated, this suggests the presence of clay or soil. Recommend resampling and retesting immediately. If new value exceeds 8.0 PPM, run check with D19-0 to ensure proper instrument function. When proper function is confirmed, report both results and suspected contamination with soil, sand, or dust to chain of command, maintenance chief, cognizant engineering authority (Army and Navy only), and other personnel as specified by local written procedures. Recommend flushing and retesting of contaminated pre-oilers, carts, or other reservoirs where contamination is found until silicon concentration falls below 8.0 PPM. Refer to JOAP Manual Volume II Section IX, page 9-1 for more information. Recommend segregation of confirmed or suspected contaminated stocks, and submit information (batch no., lot no., MIL-PRF, nature of problem, etc.) on such stocks through the Defense supply deficiency reporting system.

H-3 (NAVY)
TRANSMISSION

JOAP ATOMIC EMISSION ROTRODE

	Fe	Ag	Al	Cr	Cu	Mg	B	Si	Zn
Abnormal Trend (PPM Increase in 10 hrs)	10	2	4	2	5	4			
Normal Range	0-33	0-4	0-10	0-5	0-16	0-13			
Marginal Range	34-40	5	11-12	6	17-20	14-16			
High Range	41-49	6	13-14	7	21-24	17-19			
Abnormal	≥50	≥7	≥15	≥8	≥25	≥20	10	10	10

WATER LIMIT: 1,000 PPM on 0.100% (if equipment is available at lab)

Fe alone usually indicates discrepancy in spider gear reduction area. Cu wear metals associated with oil pump bushing accessory drive wheel or main mast bushing bearing.

Water in the oil could cause high iron, copper, magnesium or aluminum due to corrosion. If high or abnormal wear metals are obtained and high water is detected on two consecutive samples, the laboratory recommendation may be to flush Main Transmission, reservice and perform serviceability check. Info CFA when recommending flushing.

Elevated boron (B) and/or zinc (Zn) concentrations usually indicate contamination with another oil type, primarily MIL-PRF-2104. Recommend resampling and retesting immediately. If new value exceeds 8.0 PPM, run check with D19-0 to ensure proper instrument function. When proper function is confirmed, report both results and suspected contamination with MIL-PRF-2104 to chain of command, maintenance chief, cognizant engineering authority (Army and Navy only), and other personnel as specified by local written procedures. Recommend flushing and retesting of contaminated pre-oilers, carts, or other reservoirs where contamination is found until both B and Zn concentrations fall below 8.0 PPM. Refer to JOAP Manual Volume II Section IX, page 9-1 for more information. Recommend segregation of confirmed or suspected contaminated stocks, and submit information (batch no., lot no., MIL-PRF, nature of problem, etc.) on such stocks through the Defense supply deficiency reporting system.

Elevated silicon (Si) concentration usually indicates contamination with soil, sand, or dust. If aluminum (Al) is also elevated, this suggests the presence of clay or soil. Recommend resampling and retesting immediately. If new value exceeds 8.0 PPM, run check with D19-0 to ensure proper instrument function. When proper function is confirmed, report both results and suspected contamination with soil, sand, or dust to chain of command, maintenance chief, cognizant engineering authority (Army and Navy only), and other personnel as specified by local written procedures. Recommend flushing and retesting of contaminated pre-oilers, carts, or other reservoirs where contamination is found until silicon concentration falls below 8.0 PPM. Refer to JOAP Manual Volume II Section IX, page 9-1 for more information. Recommend segregation of confirmed or suspected contaminated stocks, and submit information (batch no., lot no., MIL-PRF, nature of problem, etc.) on such stocks through the Defense supply deficiency reporting system.

H-3 (NAVY) (Cont.)
TRANSMISSION

NOTES

Special samples may be recommended anytime unusual readings are obtained.

High metal readings without high water may result in a laboratory recommendation for flushing or removal of a Main Transmission. A minimum of two consecutive high readings is required prior to recommending flushing or removing a Main Transmission unless other evidence (chiplights, fragments, unusual noise, etc.) is found. Info CFA when recommending flushing. CFA concurrence is required prior to recommendation for gearbox removal due to high readings. Furnish CFA with 5 previous NOAP readings when recommending Main Transmission Removal.

H-3 (NAVY)
42° INTERMEDIATE GEARBOX

JOAP ATOMIC EMISSION ROTRODE

	Fe	Ag	Al	Cr	Cu	Mg	B	Si	Zn
Abnormal Trend (PPM Increase in 10 hrs)	13		3		8	8			
Normal Range	0-43		0-10		0-27	0-27			
Marginal Range	44-53		11-12		28-33	28-33			
High Range	54-63		13-15		34-40	34-40			
Abnormal	≥64		≥16		≥41	≥41	10	10	10

WATER LIMIT: 1,000 PPM on 0.100% (if equipment is available at lab)

Water in the oil could cause high iron, copper, magnesium or aluminum due to corrosion. If high or abnormal wear metals are obtained and high water is detected on two consecutive samples, the laboratory recommendation may be to flush gearbox, reservice and perform serviceability check. Info CFA when recommending flushing.

Elevated boron (B) and/or zinc (Zn) concentrations usually indicate contamination with another oil type, primarily MIL-PRF-2104. Recommend resampling and retesting immediately. If new value exceeds 8.0 PPM, run check with D19-0 to ensure proper instrument function. When proper function is confirmed, report both results and suspected contamination with MIL-PRF-2104 to chain of command, maintenance chief, cognizant engineering authority (Army and Navy only), and other personnel as specified by local written procedures. Recommend flushing and retesting of contaminated pre-oilers, carts, or other reservoirs where contamination is found until both B and Zn concentrations fall below 8.0 PPM. Refer to JOAP Manual Volume II Section IX, page 9-1 for more information. Recommend segregation of confirmed or suspected contaminated stocks, and submit information (batch no., lot no., MIL-PRF, nature of problem, etc.) on such stocks through the Defense supply deficiency reporting system.

Elevated silicon (Si) concentration usually indicates contamination with soil, sand, or dust. If aluminum (Al) is also elevated, this suggests the presence of clay or soil. Recommend resampling and retesting immediately. If new value exceeds 8.0 PPM, run check with D19-0 to ensure proper instrument function. When proper function is confirmed, report both results and suspected contamination with soil, sand, or dust to chain of command, maintenance chief, cognizant engineering authority (Army and Navy only), and other personnel as specified by local written procedures. Recommend flushing and retesting of contaminated pre-oilers, carts, or other reservoirs where contamination is found until silicon concentration falls below 8.0 PPM. Refer to JOAP Manual Volume II Section IX, page 9-1 for more information. Recommend segregation of confirmed or suspected contaminated stocks, and submit information (batch no., lot no., MIL-PRF, nature of problem, etc.) on such stocks through the Defense supply deficiency reporting system.

H-3 (NAVY) (Cont.)
42° INTERMEDIATE GEARBOX

NOTES

Special samples may be recommended anytime unusual readings are obtained.

High metal readings without high water may result in a laboratory recommendation for flushing or removal of a gearbox. A minimum of two consecutive high readings is required prior to recommending flush or removing a gearbox unless other evidence (chiplights, fragments, unusual noise, etc.) is found. Info CFA when recommending flushing. CFA concurrence is required prior to a recommendation for gearbox removal due to high readings. Furnish CFA with 5 previous NOAP readings when recommending gearbox removal.

H-3 (NAVY)
TAIL ROTOR GEARBOX

JOAP ATOMIC EMISSION ROTRODE

	Fe	Ag	Al	Cr	Cu	Mg	B	Si	Zn
Abnormal Trend (PPM Increase in 10 hrs)	16		3		14	13			
Normal Range	0-52		0-10		0-60	0-54			
Marginal Range	53-64		11-12		61-74	55-66			
High Range	65-80		13-15		75-89	67-81			
Abnormal	≥81		≥16		≥90	≥82	10	10	10

WATER LIMIT: 1,000 PPM on 0.100% (if equipment is available at lab)

Fe	Bearing assemblies, gears and bevel gears
Fe Cu	Pitch control rod and sleeve bearing Output shaft bearing assembly
Al	Shims
Mg Fe	Housing and bearing liners

Water in the oil could cause high iron, copper, magnesium or aluminum due to corrosion. If high or abnormal wear metals are obtained and high water is detected on two consecutive samples, the laboratory recommendation may be to flush gearbox, reservice and perform serviceability check. Info CFA when recommending flushing.

Elevated boron (B) and/or zinc (Zn) concentrations usually indicate contamination with another oil type, primarily MIL-PRF-2104. Recommend resampling and retesting immediately. If new value exceeds 8.0 PPM, run check with D19-0 to ensure proper instrument function. When proper function is confirmed, report both results and suspected contamination with MIL-PRF-2104 to chain of command, maintenance chief, cognizant engineering authority (Army and Navy only), and other personnel as specified by local written procedures. Recommend flushing and retesting of contaminated pre-oilers, carts, or other reservoirs where contamination is found until both B and Zn concentrations fall below 8.0 PPM. Refer to JOAP Manual Volume II Section IX, page 9-1 for more information. Recommend segregation of confirmed or suspected contaminated stocks, and submit information (batch no., lot no., MIL-PRF, nature of problem, etc.) on such stocks through the Defense supply deficiency reporting system.

Elevated silicon (Si) concentration usually indicates contamination with soil, sand, or dust. If aluminum (Al) is also elevated, this suggests the presence of clay or soil. Recommend resampling and retesting immediately. If new value exceeds 8.0 PPM, run check with D19-0 to ensure proper instrument function. When proper function is confirmed, report both results and suspected contamination with soil, sand, or dust to chain of command, maintenance chief, cognizant engineering authority (Army and Navy only), and other personnel as specified by local written procedures. Recommend flushing and retesting of contaminated pre-oilers, carts, or other reservoirs where contamination is found until silicon concentration falls below 8.0 PPM. Refer to JOAP Manual Volume II Section IX, page 9-1 for more information. Recommend segregation of confirmed or

suspected contaminated stocks, and submit information (batch no., lot no., MIL-PRF, nature of problem, etc.) on such stocks through the Defense supply deficiency reporting system.

NOTES

Special samples may be recommended anytime unusual readings are obtained.

High metal readings without high water may result in a laboratory recommendation for flushing or removal of a gearbox. A minimum of two consecutive high readings is required prior to recommending flushing or removing a gearbox unless other evidence (chiplights, fragments, unusual noise, etc.) is found. Info CFA when recommending flushing. CFA concurrence is required prior to a recommendation for gearbox removal due to high readings. Furnish CFA with 5 previous NOAP readings when recommending gearbox removal.

H-3, VH-3D
MAIN TRANSMISSION

JOAP ATOMIC EMISSION ROTRODE

	Fe	Ag	Al	Cr	Cu	Mg	B	Si	Zn
Abnormal Trend (PPM Increase in 10 hrs)	10	2	4	2	5	4			
Normal Range	0-33	0-4	0-10	0-5	0-16	0-13			
Marginal Range	34-40	5	11-12	6	17-20	14-16			
High Range	41-49	6	13-14	7	21-24	17-19			
Abnormal	≥50	≥7	≥15	≥8	≥25	≥20	10	10	10

WATER LIMIT: 1,000 PPM or 0.100%

Elevated boron (B) and/or zinc (Zn) concentrations usually indicate contamination with another oil type, primarily MIL-PRF-2104. Recommend resampling and retesting immediately. If new value exceeds 8.0 PPM, run check with D19-0 to ensure proper instrument function. When proper function is confirmed, report both results and suspected contamination with MIL-PRF-2104 to chain of command, maintenance chief, cognizant engineering authority (Army and Navy only), and other personnel as specified by local written procedures. Recommend flushing and retesting of contaminated pre-oilers, carts, or other reservoirs where contamination is found until both B and Zn concentrations fall below 8.0 PPM. Refer to JOAP Manual Volume II Section IX, page 9-1 for more information. Recommend segregation of confirmed or suspected contaminated stocks, and submit information (batch no., lot no., MIL-PRF, nature of problem, etc.) on such stocks through the Defense supply deficiency reporting system.

Elevated silicon (Si) concentration usually indicates contamination with soil, sand, or dust. If aluminum (Al) is also elevated, this suggests the presence of clay or soil. Recommend resampling and retesting immediately. If new value exceeds 8.0 PPM, run check with D19-0 to ensure proper instrument function. When proper function is confirmed, report both results and suspected contamination with soil, sand, or dust to chain of command, maintenance chief, cognizant engineering authority (Army and Navy only), and other personnel as specified by local written procedures. Recommend flushing and retesting of contaminated pre-oilers, carts, or other reservoirs where contamination is found until silicon concentration falls below 8.0 PPM. Refer to JOAP Manual Volume II Section IX, page 9-1 for more information. Recommend segregation of confirmed or suspected contaminated stocks, and submit information (batch no., lot no., MIL-PRF, nature of problem, etc.) on such stocks through the Defense supply deficiency reporting system.

Fe: Iron may indicate either wear or corrosion. Iron alone usually indicates discrepancy in spider gear reduction area.
Al: Aluminum contamination only would indicate corrosion. Aluminum detected with other wear metals indicates wear/fretting.
Ag: Silver usually indicates discrepancy with the plating on male splines of bevel gears.
Cr: Chromium is associated with plating on flange sleeves and shafts.

H-3, VH-3D (Cont.)
MAIN TRANSMISSION

Cu: Copper wear metals are normally associated with oil pump bushing accessory drive wheel or main mast bushing bearing.

Mg: Magnesium detected in a new or freshly reworked transmission indicates minor manufacture/assembly debris from housing. Otherwise magnesium contamination indicates internal corrosion or abrasive wear.

All oil samples shall be checked for water content. Water limit is 1,000 PPM or 0.100 percent. Water in main transmission may cause high wear metal indications (normally either high iron, copper, magnesium and/or aluminum) as a result of internal components corrosion. When high or abnormal wear metals are detected and/or the water content of the oil exceeds 1,000 PPM (0.100 percent), the laboratory's recommendation should be to drain, flush, re-service with new oil and perform a serviceability check in accordance with the applicable service manuals. Submit oil samples after serviceability check and a special oil sample approximately each 10 flight hours for the next 30 flight hours.

NOTES

Special oil samples may be recommended anytime unusual readings are obtained.

High metal readings without high water may result in a laboratory recommendation for flushing or removal of a main transmission. A minimum of two consecutive high readings is required prior to recommending flushing or removing a main transmission unless other evidence (chiplights, fragments, unusual noise, etc.) is found. Info CFA when recommending flushing. CFA (Navy H-3s) or VH In-Service Class Desk(VH-3Ds) concurrence is required prior to recommendation for main transmission removal due to high readings. Furnish CFA or VH In-Service Class Desk with five previous oil analysis readings when recommending a main transmission removal.

H-3, VH-3D
42° INTERMEDIATE GEARBOX

JOAP ATOMIC EMISSION ROTRODE

	Fe	Ag	Al	Cr	Cu	Mg	B	Si	Zn
Abnormal Trend (PPM Increase in 10 hrs)	13		3		8	8			
Normal Range	0-43		0-10		0-27	0-27			
Marginal Range	44-53		11-12		28-33	28-33			
High Range	54-63		13-15		34-40	34-40			
Abnormal	≥64		≥16		≥41	≥41	10	10	10

WATER LIMIT: 1,000 PPM or 0.100%

Fe: Iron may indicate either wear or corrosion. Iron alone usually indicates discrepancy in bearing assemblies, gears and bevel gears.
Al: Aluminum contamination only would indicate corrosion. Aluminum detected with other wear metals indicates wear/fretting.
Cu: Copper wear metals are normally associated with bushings and bearing assembly.
Mg: Magnesium detected in a new or freshly reworked gearbox indicates minor manufacturing/assembly debris from housing. Otherwise magnesium contamination indicates internal corrosion or abrasive wear.

Elevated boron (B) and/or zinc (Zn) concentrations usually indicate contamination with another oil type, primarily MIL-PRF-2104. Recommend resampling and retesting immediately. If new value exceeds 8.0 PPM, run check with D19-0 to ensure proper instrument function. When proper function is confirmed, report both results and suspected contamination with MIL-PRF-2104 to chain of command, maintenance chief, cognizant engineering authority (Army and Navy only), and other personnel as specified by local written procedures. Recommend flushing and retesting of contaminated pre-oilers, carts, or other reservoirs where contamination is found until both B and Zn concentrations fall below 8.0 PPM. Refer to JOAP Manual Volume II Section IX, page 9-1 for more information. Recommend segregation of confirmed or suspected contaminated stocks, and submit information (batch no., lot no., MIL-PRF, nature of problem, etc.) on such stocks through the Defense supply deficiency reporting system.

Elevated silicon (Si) concentration usually indicates contamination with soil, sand, or dust. If aluminum (Al) is also elevated, this suggests the presence of clay or soil. Recommend resampling and retesting immediately. If new value exceeds 8.0 PPM, run check with D19-0 to ensure proper instrument function. When proper function is confirmed, report both results and suspected contamination with soil, sand, or dust to chain of command, maintenance chief, cognizant engineering authority (Army and Navy only), and other personnel as specified by local written procedures. Recommend flushing and retesting of contaminated pre-oilers, carts, or other reservoirs where contamination is found until silicon concentration falls below 8.0 PPM. Refer to JOAP Manual Volume II Section IX, page 9-1 for more information. Recommend segregation of confirmed or suspected contaminated stocks, and submit information (batch no., lot no., MIL-PRF, nature of problem, etc.) on such stocks through the Defense supply deficiency reporting system.

H-3, VH-3D (Cont.)
42° INTERMEDIATE GEARBOX

The intermediate gearbox has a self-contained splash lubricated air cooled oil system without an oil filter. Normal wear metal particles will continue to increase until the gearbox is drained and re-serviced in accordance with the appropriate maintenance manual.

All oil samples shall be checked for water content. Water limit is 1,000 PPM or 0.100 percent. Water in the intermediate gearbox may cause high wear metal indications (normally either high iron, copper, magnesium and/or aluminum) as a result of internal components corrosion. When high or abnormal wear metals are detected and/or the water content of the oil exceeds 1,000 PPM (0.100 percent), the laboratory's recommendation should be to drain, flush, re-service with new oil and perform a serviceability check in accordance with the applicable service manuals. Submit oil samples after serviceability check and a special oil sample approximately each 10 flight hours for the next 30 flight hours.

NOTES

Special oil samples may be recommended anytime unusual readings are obtained.

High metal readings without high water may result in a laboratory recommendation for flushing or removal of the intermediate gearbox. A minimum of two consecutive high readings is required prior to recommending flushing or removing the intermediate gearbox unless other evidence (chiplights, fragments, unusual noise, etc.) is found. Info CFA when recommending flushing. CFA (Navy H-3s) or VH In-Service Class Desk(VH-3Ds) concurrence is required prior to recommendation for intermediate gearbox removal due to high readings. Furnish CFA or VH In-Service Class Desk with five previous oil analysis readings when recommending intermediate gearbox removal.

H-3, VH-3D
TAIL ROTOR GEARBOX

JOAP ATOMIC EMISSION ROTRODE

	Fe	Ag	Al	Cr	Cu	Mg	B	Si	Zn
Abnormal Trend (PPM Increase in 10 hrs)	16		3		14	13			
Normal Range	0-52		0-10		0-60	0-54			
Marginal Range	53-64		11-12		61-74	55-66			
High Range	65-80		13-15		75-89	67-81			
Abnormal	≥81		≥16		≥90	≥82	10	10	10

Fe: Iron may indicate either wear or corrosion. Iron alone usually indicates discrepancy in bearing assemblies, gears and bevel gears.
Al: Aluminum contamination only would indicate corrosion. Aluminum detected with other wear metals indicates wear/fretting of shims.
Cu: Copper wear metals are normally associated with pitch control rod and sleeve bearing, and output shaft bearing assembly.
Mg: Magnesium detected in a new or freshly reworked tail rotor gearbox indicates minor manufacturing/assembly debris from housing. Otherwise magnesium contamination indicates internal corrosion or abrasive wear of bearing liners.

Elevated boron (B) and/or zinc (Zn) concentrations usually indicate contamination with another oil type, primarily MIL-PRF-2104. Recommend resampling and retesting immediately. If new value exceeds 8.0 PPM, run check with D19-0 to ensure proper instrument function. When proper function is confirmed, report both results and suspected contamination with MIL-PRF-2104 to chain of command, maintenance chief, cognizant engineering authority (Army and Navy only), and other personnel as specified by local written procedures. Recommend flushing and retesting of contaminated pre-oilers, carts, or other reservoirs where contamination is found until both B and Zn concentrations fall below 8.0 PPM. Refer to JOAP Manual Volume II Section IX, page 9-1 for more information. Recommend segregation of confirmed or suspected contaminated stocks, and submit information (batch no., lot no., MIL-PRF, nature of problem, etc.) on such stocks through the Defense supply deficiency reporting system.

Elevated silicon (Si) concentration usually indicates contamination with soil, sand, or dust. If aluminum (Al) is also elevated, this suggests the presence of clay or soil. Recommend resampling and retesting immediately. If new value exceeds 8.0 PPM, run check with D19-0 to ensure proper instrument function. When proper function is confirmed, report both results and suspected contamination with soil, sand, or dust to chain of command, maintenance chief, cognizant engineering authority (Army and Navy only), and other personnel as specified by local written procedures. Recommend flushing and retesting of contaminated pre-oilers, carts, or other reservoirs where contamination is found until silicon concentration falls below 8.0 PPM. Refer to JOAP Manual Volume II Section IX, page 9-1 for more information. Recommend segregation of confirmed or suspected contaminated stocks, and submit information (batch no., lot no., MIL-PRF, nature of problem, etc.) on such stocks through the Defense supply deficiency reporting system.

The tail rotor gearbox has a self-contained splash lubricated air cooled oil system without an oil filter. Normal wear metal particles will continue to increase until the gearbox is drained and re-serviced in accordance with the appropriate maintenance manual.

H-3, VH-3D (Cont.)
TAIL ROTOR GEARBOX

All oil samples shall be checked for water content. **Water** limit is 1,000 PPM or 0.100 percent. Water in the tail rotor gearbox may cause high wear metal indications (normally either high iron, copper, magnesium and/or aluminum) as a result of internal components corrosion. When high or abnormal wear metals are detected and/or the water content of the oil exceeds 1,000 PPM (0.100 percent), the laboratory's recommendation should be to drain, flush, re-service with new oil and perform a serviceability check in accordance with the applicable service manuals. Submit oil samples after serviceability check and a special oil sample approximately each 10 flight hours for the next 30 flight hours.

NOTES

Special oil samples may be recommended anytime unusual readings are obtained.

High metal readings without high water may result in a laboratory recommendation for flushing or removal of the tail rotor gearbox. A minimum of two consecutive high readings is required prior to recommending flushing or removing a tail rotor gearbox unless other evidence (chiplights, fragments, unusual noise, etc.) is found. Info CFA when recommending flushing. CFA (Navy H-3s) or VH In-Service Class Desk(VH-3Ds) concurrence is required prior to recommendation for gearbox removal due to high readings. Furnish CFA or VH In-Service Class Desk with five previous oil analysis readings when recommending tail rotor gearbox removal.

MH-6H/-6J/-M/-6N, AH-6M
MAIN TRANSMISSION

JOAP ATOMIC EMISSION ROTRODE

	Fe	Ag	Al	Cr	Cu	Mg	B	Si	Zn
Abnormal Trend (PPM Increase in 10 hrs)	24	2	4	2	3	9		7	
Normal Range	0-81	0-4	0-14	0-5	0-8	0-32		0-24	
Marginal Range	82-105	5	15-17	6	9	33-39		25-29	
High Range	106-123	6	18-22	7	10-11	40-48		30-36	
Abnormal	≥124	≥7	≥23	≥8	≥12	≥49	10	≥37	10

Elevated boron (B) and/or zinc (Zn) concentrations usually indicate contamination with another oil type, primarily MIL-PRF-2104. Recommend resampling and retesting immediately. If new value exceeds 8.0 PPM, run check with D19-0 to ensure proper instrument function. When proper function is confirmed, report both results and suspected contamination with MIL-PRF-2104 to chain of command, maintenance chief, cognizant engineering authority (Army and Navy only), and other personnel as specified by local written procedures. Recommend flushing and retesting of contaminated pre-oilers, carts, or other reservoirs where contamination is found until both B and Zn concentrations fall below 8.0 PPM. Refer to JOAP Manual Volume II Section IX, page 9-1 for more information. Recommend segregation of confirmed or suspected contaminated stocks, and submit information (batch no., lot no., MIL-PRF, nature of problem, etc.) on such stocks through the Defense supply deficiency reporting system.

MH-6H/-6J/-M/-6N, AH-6M
90° TAIL ROTOR GEARBOX

JOAP ATOMIC EMISSION ROTRODE

	Fe	Ag	Al	Cr	Cu	Mg	B	Si	Zn
Abnormal Trend (PPM Increase in 10 hrs)	14	3	3	3	4	7		7	
Normal Range	0-47	0-9	0-9	0-5	0-14	0-24		0-24	
Marginal Range	48-58	10-11	10-11	6	15-17	25-29		25-28	
High Range	59-71	12-13	12-13	7-8	18-22	30-36		29-35	
Abnormal	≥72	≥14	≥14	≥9	≥23	≥37	10	≥36	10

Elevated boron (B) and/or zinc (Zn) concentrations usually indicate contamination with another oil type, primarily MIL-PRF-2104. Recommend resampling and retesting immediately. If new value exceeds 8.0 PPM, run check with D19-0 to ensure proper instrument function. When proper function is confirmed, report both results and suspected contamination with MIL-PRF-2104 to chain of command, maintenance chief, cognizant engineering authority (Army and Navy only), and other personnel as specified by local written procedures. Recommend flushing and retesting of contaminated pre-oilers, carts, or other reservoirs where contamination is found until both B and Zn concentrations fall below 8.0 PPM. Refer to JOAP Manual Volume II Section IX, page 9-1 for more information. Recommend segregation of confirmed or suspected contaminated stocks, and submit information (batch no., lot no., MIL-PRF, nature of problem, etc.) on such stocks through the Defense supply deficiency reporting system.

CH-34C
TRANSMISSION

JOAP ATOMIC EMISSION ROTRODE

	Fe	Ag	Al	Cr	Cu	Mg	B	Si	Zn
Abnormal Trend (PPM Increase in 10 hrs)	12	2	4	4	11	4		5	
Normal Range	0-40	0-3	0-10	0-12	0-36	0-13		0-18	
Marginal Range	41-50	N/A	11-12	13-14	37-44	14-16		19-22	
High Range	51-61	4	13-15	15-18	45-54	17-20		23-26	
Abnormal	≥62	≥5	≥16	≥19	≥55	≥21	10	≥27	10

Fe	Bearings and gears
Fe & Cu	Bearings and races
Fe & Mg	Bearing

Elevated boron (B) and/or zinc (Zn) concentrations usually indicate contamination with another oil type, primarily MIL-PRF-2104. Recommend resampling and retesting immediately. If new value exceeds 8.0 PPM, run check with D19-0 to ensure proper instrument function. When proper function is confirmed, report both results and suspected contamination with MIL-PRF-2104 to chain of command, maintenance chief, cognizant engineering authority (Army and Navy only), and other personnel as specified by local written procedures. Recommend flushing and retesting of contaminated pre-oilers, carts, or other reservoirs where contamination is found until both B and Zn concentrations fall below 8.0 PPM. Refer to JOAP Manual Volume II Section IX, page 9-1 for more information. Recommend segregation of confirmed or suspected contaminated stocks, and submit information (batch no., lot no., MIL-PRF, nature of problem, etc.) on such stocks through the Defense supply deficiency reporting system.

NOTES

High concentration of Fe & Mg could also indicate corrosion due to moisture in the system.

High concentration Si indicates contamination probably due to sand and dirt or silicon rubber parts or presence of anti-foaming additive.

CH-34C
INTERMEDIATE TRANSMISSION

JOAP ATOMIC EMISSION ROTRODE

	Fe	Ag	Al	Cr	Cu	Mg	B	Si	Zn
Abnormal Trend (PPM Increase in 10 hrs)	12	2	6	4	4	4		5	
Normal Range	0-40	0-3	0-20	0-14	0-12	0-14		0-19	
Marginal Range	41-50	N/A	21-25	15-17	13-14	15-17		20-23	
High Range	51-61	4	26-29	18-21	15-18	18-22		24-28	
Abnormal	≥62	≥5	≥30	≥22	≥19	≥23	10	≥29	10

Fe	Bearings and gears
Fe & Cu	Bearings and races
Fe & Mg	Bearing

Elevated boron (B) and/or zinc (Zn) concentrations usually indicate contamination with another oil type, primarily MIL-PRF-2104. Recommend resampling and retesting immediately. If new value exceeds 8.0 PPM, run check with D19-0 to ensure proper instrument function. When proper function is confirmed, report both results and suspected contamination with MIL-PRF-2104 to chain of command, maintenance chief, cognizant engineering authority (Army and Navy only), and other personnel as specified by local written procedures. Recommend flushing and retesting of contaminated pre-oilers, carts, or other reservoirs where contamination is found until both B and Zn concentrations fall below 8.0 PPM. Refer to JOAP Manual Volume II Section IX, page 9-1 for more information. Recommend segregation of confirmed or suspected contaminated stocks, and submit information (batch no., lot no., MIL-PRF, nature of problem, etc.) on such stocks through the Defense supply deficiency reporting system.

NOTES

High concentration of Fe & Mg could also indicate corrosion due to moisture in the system.

High concentration Si indicates contamination probably due to sand and dirt or silicon rubber parts or presence of anti-foaming additive.

CH-34C
TAIL ROTOR GEARBOX

JOAP ATOMIC EMISSION ROTRODE

	Fe	Ag	Al	Cr	Cu	Mg	B	Si	Zn
Abnormal Trend (PPM Increase in 10 hrs)	12	2	5	4	4	4		5	
Normal Range	0-40	0-3	0-19	0-12	0-11	0-11		0-18	
Marginal Range	41-50	N/A	20-23	13-15	12-13	12-13		19-22	
High Range	51-61	4	24-28	16-17	14-16	14-16		23-26	
Abnormal	≥62	≥5	≥29	≥18	≥17	≥17	10	≥27	10

Fe	Bearings and gears
Fe & Cu	Bearings and races
Fe & Mg	Bearing liner rotating in housing
Fe & Al	Bearing rotating in quill housing

Elevated boron (B) and/or zinc (Zn) concentrations usually indicate contamination with another oil type, primarily MIL-PRF-2104. Recommend resampling and retesting immediately. If new value exceeds 8.0 PPM, run check with D19-0 to ensure proper instrument function. When proper function is confirmed, report both results and suspected contamination with MIL-PRF-2104 to chain of command, maintenance chief, cognizant engineering authority (Army and Navy only), and other personnel as specified by local written procedures. Recommend flushing and retesting of contaminated pre-oilers, carts, or other reservoirs where contamination is found until both B and Zn concentrations fall below 8.0 PPM. Refer to JOAP Manual Volume II Section IX, page 9-1 for more information. Recommend segregation of confirmed or suspected contaminated stocks, and submit information (batch no., lot no., MIL-PRF, nature of problem, etc.) on such stocks through the Defense supply deficiency reporting system.

NOTES

High concentration of Fe & Mg could also indicate corrosion due to moisture in the system.

High concentration Si indicates contamination probably due to sand and dirt or silicon rubber parts or presence of anti-foaming additive.

H-43
TRANSMISSION

JOAP ATOMIC EMISSION ROTRODE

	Fe	Ag	Al	Cr	Cu	Mg	B	Si	Zn
Abnormal Trend (PPM Increase in 10 hrs)	12	2	4	2	3	3			
Normal Range	0-39	0-3	0-10	0-3	0-6	0-6			
Marginal Range	40-48	N/A	11-12	N/A	7	7			
High Range	49-59	4	13-14	4	8-9	8-9			
Abnormal	≥60	≥5	≥15	≥5	≥10	≥10	10	10	10

Samples frequently contaminated; when this occurs all wear metals will be high; recommend resample.

Elevated boron (B) and/or zinc (Zn) concentrations usually indicate contamination with another oil type, primarily MIL-PRF-2104. Recommend resampling and retesting immediately. If new value exceeds 8.0 PPM, run check with D19-0 to ensure proper instrument function. When proper function is confirmed, report both results and suspected contamination with MIL-PRF-2104 to chain of command, maintenance chief, cognizant engineering authority (Army and Navy only), and other personnel as specified by local written procedures. Recommend flushing and retesting of contaminated pre-oilers, carts, or other reservoirs where contamination is found until both B and Zn concentrations fall below 8.0 PPM. Refer to JOAP Manual Volume II Section IX, page 9-1 for more information. Recommend segregation of confirmed or suspected contaminated stocks, and submit information (batch no., lot no., MIL-PRF, nature of problem, etc.) on such stocks through the Defense supply deficiency reporting system.

Elevated silicon (Si) concentration usually indicates contamination with soil, sand, or dust. If aluminum (Al) is also elevated, this suggests the presence of clay or soil. Recommend resampling and retesting immediately. If new value exceeds 8.0 PPM, run check with D19-0 to ensure proper instrument function. When proper function is confirmed, report both results and suspected contamination with soil, sand, or dust to chain of command, maintenance chief, cognizant engineering authority (Army and Navy only), and other personnel as specified by local written procedures. Recommend flushing and retesting of contaminated pre-oilers, carts, or other reservoirs where contamination is found until silicon concentration falls below 8.0 PPM. Refer to JOAP Manual Volume II Section IX, page 9-1 for more information. Recommend segregation of confirmed or suspected contaminated stocks, and submit information (batch no., lot no., MIL-PRF, nature of problem, etc.) on such stocks through the Defense supply deficiency reporting system.

H-46 (NAVY)
FORWARD GEARBOX

JOAP ATOMIC EMISSION ROTRODE

	Fe	Ag	Al	Cr	Cu	Mg	B	Si	Zn
Abnormal Trend (PPM Increase in 10 hrs)	13		12		4	5			
Normal Range	0-42		0-40		0-10	0-17			
Marginal Range	43-52		41-50		11-12	18-21			
High Range	53-63		51-58		13-14	22-25			
Abnormal	≥64		≥59		≥15	≥26	10	10	10

Fe	Bearing assemblies
Cu	Sump filter or inlet filter, bearing cages
Al & Fe	Upper case and bearing assemblies
Mg & Fe	Lower case and bearing assemblies, corrosion

Elevated boron (B) and/or zinc (Zn) concentrations usually indicate contamination with another oil type, primarily MIL-PRF-2104. Recommend resampling and retesting immediately. If new value exceeds 8.0 PPM, run check with D19-0 to ensure proper instrument function. When proper function is confirmed, report both results and suspected contamination with MIL-PRF-2104 to chain of command, maintenance chief, cognizant engineering authority (Army and Navy only), and other personnel as specified by local written procedures. Recommend flushing and retesting of contaminated pre-oilers, carts, or other reservoirs where contamination is found until both B and Zn concentrations fall below 8.0 PPM. Refer to JOAP Manual Volume II Section IX, page 9-1 for more information. Recommend segregation of confirmed or suspected contaminated stocks, and submit information (batch no., lot no., MIL-PRF, nature of problem, etc.) on such stocks through the Defense supply deficiency reporting system.

Elevated silicon (Si) concentration usually indicates contamination with soil, sand, or dust. If aluminum (Al) is also elevated, this suggests the presence of clay or soil. Recommend resampling and retesting immediately. If new value exceeds 8.0 PPM, run check with D19-0 to ensure proper instrument function. When proper function is confirmed, report both results and suspected contamination with soil, sand, or dust to chain of command, maintenance chief, cognizant engineering authority (Army and Navy only), and other personnel as specified by local written procedures. Recommend flushing and retesting of contaminated pre-oilers, carts, or other reservoirs where contamination is found until silicon concentration falls below 8.0 PPM. Refer to JOAP Manual Volume II Section IX, page 9-1 for more information. Recommend segregation of confirmed or suspected contaminated stocks, and submit information (batch no., lot no., MIL-PRF, nature of problem, etc.) on such stocks through the Defense supply deficiency reporting system.

H-46 (NAVY)
AFT GEARBOX

JOAP ATOMIC EMISSION ROTRODE

	Fe	Ag	Al	Cr	Cu	Mg	B	Si	Zn
Abnormal Trend (PPM Increase in 10 hrs)	14		12		5	5			
Normal Range	0-46		0-40		0-17	0-17			
Marginal Range	47-56		41-50		18-21	18-21			
High Range	57-69		51-58		22-25	22-25			
Abnormal	≥70		≥59		≥26	≥26	10	10	10

Fe	Bearing assemblies
Fe & Cu	Bearing assemblies
Fe & Mg	Bearings and transmission cases

Elevated boron (B) and/or zinc (Zn) concentrations usually indicate contamination with another oil type, primarily MIL-PRF-2104. Recommend resampling and retesting immediately. If new value exceeds 8.0 PPM, run check with D19-0 to ensure proper instrument function. When proper function is confirmed, report both results and suspected contamination with MIL-PRF-2104 to chain of command, maintenance chief, cognizant engineering authority (Army and Navy only), and other personnel as specified by local written procedures. Recommend flushing and retesting of contaminated pre-oilers, carts, or other reservoirs where contamination is found until both B and Zn concentrations fall below 8.0 PPM. Refer to JOAP Manual Volume II Section IX, page 9-1 for more information. Recommend segregation of confirmed or suspected contaminated stocks, and submit information (batch no., lot no., MIL-PRF, nature of problem, etc.) on such stocks through the Defense supply deficiency reporting system.

Elevated silicon (Si) concentration usually indicates contamination with soil, sand, or dust. If aluminum (Al) is also elevated, this suggests the presence of clay or soil. Recommend resampling and retesting immediately. If new value exceeds 8.0 PPM, run check with D19-0 to ensure proper instrument function. When proper function is confirmed, report both results and suspected contamination with soil, sand, or dust to chain of command, maintenance chief, cognizant engineering authority (Army and Navy only), and other personnel as specified by local written procedures. Recommend flushing and retesting of contaminated pre-oilers, carts, or other reservoirs where contamination is found until silicon concentration falls below 8.0 PPM. Refer to JOAP Manual Volume II Section IX, page 9-1 for more information. Recommend segregation of confirmed or suspected contaminated stocks, and submit information (batch no., lot no., MIL-PRF, nature of problem, etc.) on such stocks through the Defense supply deficiency reporting system.

CH-47D/F, MH-47E/G
ENGINE MECHANICAL TRANSMISSION

JOAP ATOMIC EMISSION ROTRODE

	Fe	Ag	Al	Cr	Cu	Mg	B	Si	Zn
Abnormal Trend (PPM Increase in 10 hrs)	3	2	2	2	2	4		3	
Normal Range	0-8	0-1	0-2	0-1	0-3	0-15		0-6	
Marginal Range	9-10	2-3	3	2	4	16-18		7-8	
High Range	11-13	4	4	3	5	19-23		9-10	
Abnormal	≥14	≥5	≥5	≥4	≥6	≥24	10	≥11	10

Elevated boron (B) and/or zinc (Zn) concentrations usually indicate contamination with another oil type, primarily MIL-PRF-2104. Recommend resampling and retesting immediately. If new value exceeds 8.0 PPM, run check with D19-0 to ensure proper instrument function. When proper function is confirmed, report both results and suspected contamination with MIL-PRF-2104 to chain of command, maintenance chief, cognizant engineering authority (Army and Navy only), and other personnel as specified by local written procedures. Recommend flushing and retesting of contaminated pre-oilers, carts, or other reservoirs where contamination is found until both B and Zn concentrations fall below 8.0 PPM. Refer to JOAP Manual Volume II Section IX, page 9-1 for more information. Recommend segregation of confirmed or suspected contaminated stocks, and submit information (batch no., lot no., MIL-PRF, nature of problem, etc.) on such stocks through the Defense supply deficiency reporting system.

Elevated silicon (Si) concentration usually indicates contamination with soil, sand, or dust. If aluminum (Al) is also elevated, this suggests the presence of clay or soil. Recommend resampling and retesting immediately. If new value exceeds 8.0 PPM, run check with D19-0 to ensure proper instrument function. When proper function is confirmed, report both results and suspected contamination with soil, sand, or dust to chain of command, maintenance chief, cognizant engineering authority (Army and Navy only), and other personnel as specified by local written procedures. Recommend flushing and retesting of contaminated pre-oilers, carts, or other reservoirs where contamination is found until silicon concentration falls below 8.0 PPM. Refer to JOAP Manual Volume II Section IX, page 9-1 for more information. Recommend segregation of confirmed or suspected contaminated stocks, and submit information (batch no., lot no., MIL-PRF, nature of problem, etc.) on such stocks through the Defense supply deficiency reporting system.

CH-47D/F MH-47E/G
COMBINING TRANSMISSION

JOAP ATOMIC EMISSION ROTRODE

	Fe	Ag	Al	Cr	Cu	Mg	B	Si	Zn
Abnormal Trend (PPM Increase in 10 hrs)	3	2	2	2	2	4		3	
Normal Range	0-8	1	0-2	1	0-2	0-14		0-7	
Marginal Range	9-10	2	3	2	3	15-18		8-9	
High Range	11-13	3	4	3	4	19-22		10	
Abnormal	≥14	≥4	≥5	≥4	≥5	≥23	10	≥11	10

Elevated boron (B) and/or zinc (Zn) concentrations usually indicate contamination with another oil type, primarily MIL-PRF-2104. Recommend resampling and retesting immediately. If new value exceeds 8.0 PPM, run check with D19-0 to ensure proper instrument function. When proper function is confirmed, report both results and suspected contamination with MIL-PRF-2104 to chain of command, maintenance chief, cognizant engineering authority (Army and Navy only), and other personnel as specified by local written procedures. Recommend flushing and retesting of contaminated pre-oilers, carts, or other reservoirs where contamination is found until both B and Zn concentrations fall below 8.0 PPM. Refer to JOAP Manual Volume II Section IX, page 9-1 for more information. Recommend segregation of confirmed or suspected contaminated stocks, and submit information (batch no., lot no., MIL-PRF, nature of problem, etc.) on such stocks through the Defense supply deficiency reporting system.

Elevated silicon (Si) concentration usually indicates contamination with soil, sand, or dust. If aluminum (Al) is also elevated, this suggests the presence of clay or soil. Recommend resampling and retesting immediately. If new value exceeds 8.0 PPM, run check with D19-0 to ensure proper instrument function. When proper function is confirmed, report both results and suspected contamination with soil, sand, or dust to chain of command, maintenance chief, cognizant engineering authority (Army and Navy only), and other personnel as specified by local written procedures. Recommend flushing and retesting of contaminated pre-oilers, carts, or other reservoirs where contamination is found until silicon concentration falls below 8.0 PPM. Refer to JOAP Manual Volume II Section IX, page 9-1 for more information. Recommend segregation of confirmed or suspected contaminated stocks, and submit information (batch no., lot no., MIL-PRF, nature of problem, etc.) on such stocks through the Defense supply deficiency reporting system.

CH-47D/F MH-47DE/G
FORWARD TRANSMISSION

JOAP ATOMIC EMISSION ROTRODE

	Fe	Ag	Al	Cr	Cu	Mg	B	Si	Zn
Abnormal Trend (PPM Increase in 10 hrs)	9	2	2	2	2	6		3	
Normal Range	0-30	1	0-6	1	0-1	0-18		0-6	
Marginal Range	31-36	2	7	2	2	19-22		7-8	
High Range	37-45	3	8-9	3	3	23-28		9-10	
Abnormal	≥46	≥4	≥10	≥4	≥4	≥29	10	≥11	10

Elevated boron (B) and/or zinc (Zn) concentrations usually indicate contamination with another oil type, primarily MIL-PRF-2104. Recommend resampling and retesting immediately. If new value exceeds 8.0 PPM, run check with D19-0 to ensure proper instrument function. When proper function is confirmed, report both results and suspected contamination with MIL-PRF-2104 to chain of command, maintenance chief, cognizant engineering authority (Army and Navy only), and other personnel as specified by local written procedures. Recommend flushing and retesting of contaminated pre-oilers, carts, or other reservoirs where contamination is found until both B and Zn concentrations fall below 8.0 PPM. Refer to JOAP Manual Volume II Section IX, page 9-1 for more information. Recommend segregation of confirmed or suspected contaminated stocks, and submit information (batch no., lot no., MIL-PRF, nature of problem, etc.) on such stocks through the Defense supply deficiency reporting system.

Elevated silicon (Si) concentration usually indicates contamination with soil, sand, or dust. If aluminum (Al) is also elevated, this suggests the presence of clay or soil. Recommend resampling and retesting immediately. If new value exceeds 8.0 PPM, run check with D19-0 to ensure proper instrument function. When proper function is confirmed, report both results and suspected contamination with soil, sand, or dust to chain of command, maintenance chief, cognizant engineering authority (Army and Navy only), and other personnel as specified by local written procedures. Recommend flushing and retesting of contaminated pre-oilers, carts, or other reservoirs where contamination is found until silicon concentration falls below 8.0 PPM. Refer to JOAP Manual Volume II Section IX, page 9-1 for more information. Recommend segregation of confirmed or suspected contaminated stocks, and submit information (batch no., lot no., MIL-PRF, nature of problem, etc.) on such stocks through the Defense supply deficiency reporting system.

CH-47D/F MH-47E/G
AFT TRANSMISSION

JOAP ATOMIC EMISSION ROTRODE

	Fe	Ag	Al	Cr	Cu	Mg	B	Si	Zn
Abnormal Trend (PPM Increase in 10 hrs)	9	2	2	2	2	10		10	
Normal Range	0-27	1	0-4	1	0-2	0-33		0-32	
Marginal Range	28-33	2	5	2	3	34-40		33-40	
High Range	34-41	3	6	3	4	41-50		41-50	
Abnormal	≥42	≥4	≥7	≥4	≥5	≥51	10	≥51	10

Elevated boron (B) and/or zinc (Zn) concentrations usually indicate contamination with another oil type, primarily MIL-PRF-2104. Recommend resampling and retesting immediately. If new value exceeds 8.0 PPM, run check with D19-0 to ensure proper instrument function. When proper function is confirmed, report both results and suspected contamination with MIL-PRF-2104 to chain of command, maintenance chief, cognizant engineering authority (Army and Navy only), and other personnel as specified by local written procedures. Recommend flushing and retesting of contaminated pre-oilers, carts, or other reservoirs where contamination is found until both B and Zn concentrations fall below 8.0 PPM. Refer to JOAP Manual Volume II Section IX, page 9-1 for more information. Recommend segregation of confirmed or suspected contaminated stocks, and submit information (batch no., lot no., MIL-PRF, nature of problem, etc.) on such stocks through the Defense supply deficiency reporting system.

HH-52 (NAVY and COAST GUARD)
MAIN TRANSMISSION

JOAP ATOMIC EMISSION ROTRODE

	Fe	Ag	Al	Cr	Cu	Mg	B	Si	Zn
Abnormal Trend (PPM Increase in 10 hrs)	23				6	8			
Normal Range	0-76				0-20	0-26			
Marginal Range	77-88				21-25	27-32			
High Range	89-114				26-29	33-39			
Abnormal	≥115				≥30	≥40	10	10	10

Copper is commonly manifest in low-time boxes as extremely thin, foil-like flakes of bright copper in the chip detector, screen, and filters. It often shows up during the post run-in filter checks on green gearboxes. Contamination of this requires a serviceability check to verify that it is benign, and will generally diminish drastically within about 10 flight hours. Continue to be wary of any contamination in the form of granules or chunks.

Contamination may also be detected during spectrometric analysis of gearbox oil, particularly in a high-time box, and the copper level may exceed published limits. In that case, check the filters and perform a serviceability check if necessary. Barring secondary indications, continue the gearbox in service and monitor gradual copper increases.

Elevated boron (B) and/or zinc (Zn) concentrations usually indicate contamination with another oil type, primarily MIL-PRF-2104. Recommend resampling and retesting immediately. If new value exceeds 8.0 PPM, run check with D19-0 to ensure proper instrument function. When proper function is confirmed, report both results and suspected contamination with MIL-PRF-2104 to chain of command, maintenance chief, cognizant engineering authority (Army and Navy only), and other personnel as specified by local written procedures. Recommend flushing and retesting of contaminated pre-oilers, carts, or other reservoirs where contamination is found until both B and Zn concentrations fall below 8.0 PPM. Refer to JOAP Manual Volume II Section IX, page 9-1 for more information. Recommend segregation of confirmed or suspected contaminated stocks, and submit information (batch no., lot no., MIL-PRF, nature of problem, etc.) on such stocks through the Defense supply deficiency reporting system.

Elevated silicon (Si) concentration usually indicates contamination with soil, sand, or dust. If aluminum (Al) is also elevated, this suggests the presence of clay or soil. Recommend resampling and retesting immediately. If new value exceeds 8.0 PPM, run check with D19-0 to ensure proper instrument function. When proper function is confirmed, report both results and suspected contamination with soil, sand, or dust to chain of command, maintenance chief, cognizant engineering authority (Army and Navy only), and other personnel as specified by local written procedures. Recommend flushing and retesting of contaminated pre-oilers, carts, or other reservoirs where contamination is found until silicon concentration falls below 8.0 PPM. Refer to JOAP Manual Volume II Section IX, page 9-1 for more information. Recommend segregation of confirmed or suspected contaminated stocks, and submit information (batch no., lot no., MIL-PRF, nature of problem, etc.) on such stocks through the Defense supply deficiency reporting system.

Cu — Flash copper plating on planetary gears

HH-52 (NAVY and COAST GUARD)
INTERMEDIATE GEARBOX

JOAP ATOMIC EMISSION ROTRODE

	Fe	Ag	Al	Cr	Cu	Mg	B	Si	Zn
Abnormal Trend (PPM Increase in 10 hrs)	12				6	8			
Normal Range	0-124				0-20	0-26			
Marginal Range	125-144				21-25	27-32			
High Range	145-164				26-29	33-39			
Abnormal	≥165				≥30	≥40	10	10	10

Elevated boron (B) and/or zinc (Zn) concentrations usually indicate contamination with another oil type, primarily MIL-PRF-2104. Recommend resampling and retesting immediately. If new value exceeds 8.0 PPM, run check with D19-0 to ensure proper instrument function. When proper function is confirmed, report both results and suspected contamination with MIL-PRF-2104 to chain of command, maintenance chief, cognizant engineering authority (Army and Navy only), and other personnel as specified by local written procedures. Recommend flushing and retesting of contaminated pre-oilers, carts, or other reservoirs where contamination is found until both B and Zn concentrations fall below 8.0 PPM. Refer to JOAP Manual Volume II Section IX, page 9-1 for more information. Recommend segregation of confirmed or suspected contaminated stocks, and submit information (batch no., lot no., MIL-PRF, nature of problem, etc.) on such stocks through the Defense supply deficiency reporting system.

Elevated silicon (Si) concentration usually indicates contamination with soil, sand, or dust. If aluminum (Al) is also elevated, this suggests the presence of clay or soil. Recommend resampling and retesting immediately. If new value exceeds 8.0 PPM, run check with D19-0 to ensure proper instrument function. When proper function is confirmed, report both results and suspected contamination with soil, sand, or dust to chain of command, maintenance chief, cognizant engineering authority (Army and Navy only), and other personnel as specified by local written procedures. Recommend flushing and retesting of contaminated pre-oilers, carts, or other reservoirs where contamination is found until silicon concentration falls below 8.0 PPM. Refer to JOAP Manual Volume II Section IX, page 9-1 for more information. Recommend segregation of confirmed or suspected contaminated stocks, and submit information (batch no., lot no., MIL-PRF, nature of problem, etc.) on such stocks through the Defense supply deficiency reporting system.

HH-52 (NAVY and COAST GUARD)
TAIL ROTOR GEARBOX

JOAP ATOMIC EMISSION ROTRODE

	Fe	Ag	Al	Cr	Cu	Mg	B	Si	Zn
Abnormal Trend (PPM Increase in 10 hrs)	12				6	8			
Normal Range	0-124				0-20	0-26			
Marginal Range	125-144				21-25	27-32			
High Range	145-164				26-29	33-39			
Abnormal	≥165				≥30	≥40	10	10	10

Elevated boron (B) and/or zinc (Zn) concentrations usually indicate contamination with another oil type, primarily MIL-PRF-2104. Recommend resampling and retesting immediately. If new value exceeds 8.0 PPM, run check with D19-0 to ensure proper instrument function. When proper function is confirmed, report both results and suspected contamination with MIL-PRF-2104 to chain of command, maintenance chief, cognizant engineering authority (Army and Navy only), and other personnel as specified by local written procedures. Recommend flushing and retesting of contaminated pre-oilers, carts, or other reservoirs where contamination is found until both B and Zn concentrations fall below 8.0 PPM. Refer to JOAP Manual Volume II Section IX, page 9-1 for more information. Recommend segregation of confirmed or suspected contaminated stocks, and submit information (batch no., lot no., MIL-PRF, nature of problem, etc.) on such stocks through the Defense supply deficiency reporting system.

Elevated silicon (Si) concentration usually indicates contamination with soil, sand, or dust. If aluminum (Al) is also elevated, this suggests the presence of clay or soil. Recommend resampling and retesting immediately. If new value exceeds 8.0 PPM, run check with D19-0 to ensure proper instrument function. When proper function is confirmed, report both results and suspected contamination with soil, sand, or dust to chain of command, maintenance chief, cognizant engineering authority (Army and Navy only), and other personnel as specified by local written procedures. Recommend flushing and retesting of contaminated pre-oilers, carts, or other reservoirs where contamination is found until silicon concentration falls below 8.0 PPM. Refer to JOAP Manual Volume II Section IX, page 9-1 for more information. Recommend segregation of confirmed or suspected contaminated stocks, and submit information (batch no., lot no., MIL-PRF, nature of problem, etc.) on such stocks through the Defense supply deficiency reporting system.

H-53 (NAVY)
MAIN GEARBOX

JOAP ATOMIC EMISSION ROTRODE

	Fe	Ag	Al	Cr	Cu	Mg	B	Si	Zn
Abnormal Trend (PPM Increase in 10 hrs)	8				7	13			
Normal Range	0-27				0-25	0-42			
Marginal Range	28-33				26-31	43-50			
High Range	34-41				32-37	51-65			
Abnormal	≥42				≥38	≥66	10	10	10

WATER LIMIT: 1,000 PPM or 0.100% (if equipment is available at lab)

Water in the oil could cause high iron, copper, magnesium, or aluminum due to corrosion. If high or abnormal wear metals are obtained and high water is detected on two consecutive samples, the laboratory recommendations may be to drain gearbox, reservice and perform serviceability check. Info CFA when recommending flushing.

Elevated boron (B) and/or zinc (Zn) concentrations usually indicate contamination with another oil type, primarily MIL-PRF-2104. Recommend resampling and retesting immediately. If new value exceeds 8.0 PPM, run check with D19-0 to ensure proper instrument function. When proper function is confirmed, report both results and suspected contamination with MIL-PRF-2104 to chain of command, maintenance chief, cognizant engineering authority (Army and Navy only), and other personnel as specified by local written procedures. Recommend flushing and retesting of contaminated pre-oilers, carts, or other reservoirs where contamination is found until both B and Zn concentrations fall below 8.0 PPM. Refer to JOAP Manual Volume II Section IX, page 9-1 for more information. Recommend segregation of confirmed or suspected contaminated stocks, and submit information (batch no., lot no., MIL-PRF, nature of problem, etc.) on such stocks through the Defense supply deficiency reporting system.

Elevated silicon (Si) concentration usually indicates contamination with soil, sand, or dust. If aluminum (Al) is also elevated, this suggests the presence of clay or soil. Recommend resampling and retesting immediately. If new value exceeds 8.0 PPM, run check with D19-0 to ensure proper instrument function. When proper function is confirmed, report both results and suspected contamination with soil, sand, or dust to chain of command, maintenance chief, cognizant engineering authority (Army and Navy only), and other personnel as specified by local written procedures. Recommend flushing and retesting of contaminated pre-oilers, carts, or other reservoirs where contamination is found until silicon concentration falls below 8.0 PPM. Refer to JOAP Manual Volume II Section IX, page 9-1 for more information. Recommend segregation of confirmed or suspected contaminated stocks, and submit information (batch no., lot no., MIL-PRF, nature of problem, etc.) on such stocks through the Defense supply deficiency reporting system.

H-53 (NAVY) (Cont.)
MAIN GEARBOX

NOTES

Special samples may be recommended anytime unusual readings are obtained.

High metal readings without high water may result in a laboratory recommendation for flushing or removal of a gearbox. A minimum of two consecutive high readings is required prior to recommending flushing or removing gearbox unless other evidence (chiplights, fragments, unusual noise, etc.) is found. Info CFA when recommending flushing. CFA concurrence is required prior to a recommendation for gearbox removal due to high readings. Furnish CFA with 5 previous NOAP readings when recommending gearbox removal.

H-53 (NAVY)
INTERMEDIATE GEARBOX

JOAP ATOMIC EMISSION ROTRODE

	Fe	Ag	Al	Cr	Cu	Mg	B	Si	Zn
Abnormal Trend (PPM Increase in 10 hrs)	14				4	6			
Normal Range	0-46				0-13	0-20			
Marginal Range	47-56				14-16	21-25			
High Range	57-69				17-19	26-30			
Abnormal	≥70				≥20	≥31	10	10	10

Water Limit: 1,000 PPM or 0.100% (if equipment is available at lab)

Water in the oil could cause high iron, copper, magnesium, or aluminum due to corrosion. If high or abnormal wear metals are obtained and high water is detected on two consecutive samples, the laboratory recommendations may be to drain gearbox, reservice and perform serviceability check. Info CFA when recommending flushing.

Elevated boron (B) and/or zinc (Zn) concentrations usually indicate contamination with another oil type, primarily MIL-PRF-2104. Recommend resampling and retesting immediately. If new value exceeds 8.0 PPM, run check with D19-0 to ensure proper instrument function. When proper function is confirmed, report both results and suspected contamination with MIL-PRF-2104 to chain of command, maintenance chief, cognizant engineering authority (Army and Navy only), and other personnel as specified by local written procedures. Recommend flushing and retesting of contaminated pre-oilers, carts, or other reservoirs where contamination is found until both B and Zn concentrations fall below 8.0 PPM. Refer to JOAP Manual Volume II Section IX, page 9-1 for more information. Recommend segregation of confirmed or suspected contaminated stocks, and submit information (batch no., lot no., MIL-PRF, nature of problem, etc.) on such stocks through the Defense supply deficiency reporting system.

Elevated silicon (Si) concentration usually indicates contamination with soil, sand, or dust. If aluminum (Al) is also elevated, this suggests the presence of clay or soil. Recommend resampling and retesting immediately. If new value exceeds 8.0 PPM, run check with D19-0 to ensure proper instrument function. When proper function is confirmed, report both results and suspected contamination with soil, sand, or dust to chain of command, maintenance chief, cognizant engineering authority (Army and Navy only), and other personnel as specified by local written procedures. Recommend flushing and retesting of contaminated pre-oilers, carts, or other reservoirs where contamination is found until silicon concentration falls below 8.0 PPM. Refer to JOAP Manual Volume II Section IX, page 9-1 for more information. Recommend segregation of confirmed or suspected contaminated stocks, and submit information (batch no., lot no., MIL-PRF, nature of problem, etc.) on such stocks through the Defense supply deficiency reporting system.

H-53 (NAVY) (Cont.)
INTERMEDIATE GEARBOX

NOTES

Special samples may be recommended anytime unusual readings are obtained.

High metal readings without high water may result in a laboratory recommendation for flushing or removal of a gearbox. A minimum of two consecutive high readings is required prior to recommending flushing or removing gearbox unless other evidence (chiplights, fragments, unusual noise, etc.) is found. Info CFA when recommending flushing. CFA concurrence is required prior to a recommendation for gearbox removal due to high readings. Furnish CFA with 5 previous NOAP readings when recommending gearbox removal.

H-53 (NAVY)
ACCESSORY GEARBOX

JOAP ATOMIC EMISSION ROTRODE

	Fe	Ag	Al	Cr	Cu	Mg	B	Si	Zn
Abnormal Trend (PPM Increase in 10 hrs)	17		3		6	10			
Normal Range	0-56		0-12		0-20	0-40			
Marginal Range	57-68		13-15		21-25	41-50			
High Range	69-85		16-17		26-30	51-58			
Abnormal	≥86		≥18		≥31	≥59	10	10	10

WATER LIMIT: 1,000 PPM OR 0.100% (if equipment is available at lab)

Water in the oil could cause high iron, copper, magnesium, or aluminum due to corrosion. If high or abnormal wear metals are obtained and high water is detected on two consecutive samples, the laboratory recommendations may be to drain gearbox, reservice and perform serviceability check. Info CFA when recommending flushing.

Elevated boron (B) and/or zinc (Zn) concentrations usually indicate contamination with another oil type, primarily MIL-PRF-2104. Recommend resampling and retesting immediately. If new value exceeds 8.0 PPM, run check with D19-0 to ensure proper instrument function. When proper function is confirmed, report both results and suspected contamination with MIL-PRF-2104 to chain of command, maintenance chief, cognizant engineering authority (Army and Navy only), and other personnel as specified by local written procedures. Recommend flushing and retesting of contaminated pre-oilers, carts, or other reservoirs where contamination is found until both B and Zn concentrations fall below 8.0 PPM. Refer to JOAP Manual Volume II Section IX, page 9-1 for more information. Recommend segregation of confirmed or suspected contaminated stocks, and submit information (batch no., lot no., MIL-PRF, nature of problem, etc.) on such stocks through the Defense supply deficiency reporting system.

Elevated silicon (Si) concentration usually indicates contamination with soil, sand, or dust. If aluminum (Al) is also elevated, this suggests the presence of clay or soil. Recommend resampling and retesting immediately. If new value exceeds 8.0 PPM, run check with D19-0 to ensure proper instrument function. When proper function is confirmed, report both results and suspected contamination with soil, sand, or dust to chain of command, maintenance chief, cognizant engineering authority (Army and Navy only), and other personnel as specified by local written procedures. Recommend flushing and retesting of contaminated pre-oilers, carts, or other reservoirs where contamination is found until silicon concentration falls below 8.0 PPM. Refer to JOAP Manual Volume II Section IX, page 9-1 for more information. Recommend segregation of confirmed or suspected contaminated stocks, and submit information (batch no., lot no., MIL-PRF, nature of problem, etc.) on such stocks through the Defense supply deficiency reporting system.

H-53 (NAVY) (Cont.)
ACCESSORY GEARBOX

NOTES

Special samples may be recommended anytime unusual readings are obtained.

High metal readings without high water may result in a laboratory recommendation for flushing or removal of a gearbox. A minimum of two consecutive high readings is required prior to recommending flushing or removing gearbox unless other evidence (chiplights, fragments, unusual noise, etc.) is found. Info CFA when recommending flushing. CFA concurrence is required prior to a recommendation for gearbox removal due to high readings. Furnish CFA with 5 previous NOAP readings when recommending gearbox removal.

H-53
NOSE GEARBOX (NAVY)

JOAP ATOMIC EMISSION ROTRODE

	Fe	Ag	Al	Cr	Cu	Mg	B	Si	Zn
Abnormal Trend (PPM Increase in 10 hrs)	10				7	11			
Normal Range	0-31				0-24	0-40			
Marginal Range	32-40				25-28	41-50			
High Range	41-49				29-35	51-58			
Abnormal	≥50				≥36	≥59	10	10	10

WATER LIMIT: 1,000 PPM or 0.100% (if equipment is available at lab)

Water in the oil could cause high iron, copper, magnesium, or aluminum due to corrosion. If high or abnormal wear metals are obtained and high water is detected on two consecutive samples, the laboratory recommendations may be to drain gearbox, reservice and perform serviceability check. Info CFA when recommending flushing.

Elevated boron (B) and/or zinc (Zn) concentrations usually indicate contamination with another oil type, primarily MIL-PRF-2104. Recommend resampling and retesting immediately. If new value exceeds 8.0 PPM, run check with D19-0 to ensure proper instrument function. When proper function is confirmed, report both results and suspected contamination with MIL-PRF-2104 to chain of command, maintenance chief, cognizant engineering authority (Army and Navy only), and other personnel as specified by local written procedures. Recommend flushing and retesting of contaminated pre-oilers, carts, or other reservoirs where contamination is found until both B and Zn concentrations fall below 8.0 PPM. Refer to JOAP Manual Volume II Section IX, page 9-1 for more information. Recommend segregation of confirmed or suspected contaminated stocks, and submit information (batch no., lot no., MIL-PRF, nature of problem, etc.) on such stocks through the Defense supply deficiency reporting system.

Elevated silicon (Si) concentration usually indicates contamination with soil, sand, or dust. If aluminum (Al) is also elevated, this suggests the presence of clay or soil. Recommend resampling and retesting immediately. If new value exceeds 8.0 PPM, run check with D19-0 to ensure proper instrument function. When proper function is confirmed, report both results and suspected contamination with soil, sand, or dust to chain of command, maintenance chief, cognizant engineering authority (Army and Navy only), and other personnel as specified by local written procedures. Recommend flushing and retesting of contaminated pre-oilers, carts, or other reservoirs where contamination is found until silicon concentration falls below 8.0 PPM. Refer to JOAP Manual Volume II Section IX, page 9-1 for more information. Recommend segregation of confirmed or suspected contaminated stocks, and submit information (batch no., lot no., MIL-PRF, nature of problem, etc.) on such stocks through the Defense supply deficiency reporting system.

H-53 (NAVY) (Cont.)
NOSE GEARBOX

NOTES

Special samples may be recommended anytime unusual readings are obtained.

High metal readings without high water may result in a laboratory recommendation for flushing or removal of a gearbox. A minimum of two consecutive high readings is required prior to recommending flushing or removing gearbox unless other evidence (chiplights, fragments, unusual noise, etc.) is found. Info CFA when recommending flushing. CFA concurrence is required prior to a recommendation for gearbox removal due to high readings. Furnish CFA with 5 previous NOAP readings when recommending gearbox removal.

H-53 (NAVY)
TAIL ROTOR GEARBOX

JOAP ATOMIC EMISSION ROTRODE

	Fe	Ag	Al	Cr	Cu	Mg	Ti	B	Si	Zn
Abnormal Trend (PPM Increase in 10 hrs)	20				10	6	30			
Normal Range	0-64				0-40	0-20	0-150			
Marginal Range	65-76				41-50	21-25	151-200			
High Range	77-99				51-58	26-30	201-249			
Abnormal	≥100				≥59	≥31	≥250	10	10	10

WATER LIMIT: 1,000 PPM or 0.100% (if equipment is available at lab)

Common sources of titanium are the splines on the small shaft attached to the pitch change shaft and the wearing action of the pitch change shaft moving the tail rotor gearbox output shaft.

High readings of titanium are common and should not be of concern. An increase of titanium, copper, and iron should not be a matter of concern until the abnormal level of iron and titanium are exceeded. At this time the gearbox should be removed and replace.

Water in the oil could cause high iron, copper, magnesium, or aluminum due to corrosion. If high or abnormal wear metals are obtained and high water is detected on two consecutive samples, the laboratory recommendations may be to drain gearbox, reservice and perform serviceability check. Info CFA when recommending flushing.

Elevated boron (B) and/or zinc (Zn) concentrations usually indicate contamination with another oil type, primarily MIL-PRF-2104. Recommend resampling and retesting immediately. If new value exceeds 8.0 PPM, run check with D19-0 to ensure proper instrument function. When proper function is confirmed, report both results and suspected contamination with MIL-PRF-2104 to chain of command, maintenance chief, cognizant engineering authority (Army and Navy only), and other personnel as specified by local written procedures. Recommend flushing and retesting of contaminated pre-oilers, carts, or other reservoirs where contamination is found until both B and Zn concentrations fall below 8.0 PPM. Refer to JOAP Manual Volume II Section IX, page 9-1 for more information. Recommend segregation of confirmed or suspected contaminated stocks, and submit information (batch no., lot no., MIL-PRF, nature of problem, etc.) on such stocks through the Defense supply deficiency reporting system.

Elevated silicon (Si) concentration usually indicates contamination with soil, sand, or dust. If aluminum (Al) is also elevated, this suggests the presence of clay or soil. Recommend resampling and retesting immediately. If new value exceeds 8.0 PPM, run check with D19-0 to ensure proper instrument function. When proper function is confirmed, report both results and suspected contamination with soil, sand, or dust to chain of command, maintenance chief, cognizant engineering authority (Army and Navy only), and other personnel as specified by local written procedures. Recommend flushing and retesting of contaminated pre-oilers, carts, or other reservoirs where contamination is found until silicon concentration falls below 8.0 PPM. Refer to JOAP Manual Volume II Section IX, page 9-1 for more information. Recommend segregation of confirmed or suspected contaminated stocks, and submit information (batch no., lot no., MIL-PRF, nature of problem, etc.) on such stocks through the Defense supply deficiency reporting system.

H-53 (NAVY) (Cont.)
TAIL ROTOR GEARBOX

NOTES

Special samples may be recommended anytime unusual readings are obtained.

High metal readings without high water may result in a laboratory recommendation for flushing or removal of a gearbox. A minimum of two consecutive high readings is required prior to recommending flushing or removing gearbox unless other evidence (chiplights, fragments, unusual noise, etc.) is found. Info CFA when recommending flushing. CFA concurrence is required prior to a recommendation for gearbox removal due to high readings. Furnish CFA with 5 previous NOAP readings when recommending gearbox removal.

NOTES

CFA concurrence for removal is not necessary when the increase in titanium is abnormal over three consecutive readings.

Ti			A reading in excess of 150 PPM will require monitoring. Do not allow an oil change at this time. Remove the pitch change shaft when Ti reaches high range of 250 PPM. These high readings indicate wear to the inner shaft splines and to the output shaft.
Fe	Ti	Cu	Increasing high readings of Fe, Ti, and Cu indicate excessive wear to the gearbox and pitch change shaft. When the Fe readings reach the abnormal level, remove gearbox and pitch change shaft. Do not allow an oil change during the period of increasing wear metal.

H-53 (AIR FORCE)
TRANSMISSION

JOAP ATOMIC EMISSION ROTRODE

	Fe	Ag	Al	Cr	Cu	Mg	B	Si	Zn
Abnormal Trend (PPM Increase in 10 hrs)	9		4		6	11			
Normal Range	0-29		0-14		0-19	0-37			
Marginal Range	30-36		15-17		20-24	38-45			
High Range	37-44		18-20		25-29	46-56			
Abnormal	≥45		≥21		≥30	≥57	10	10	10

Elevated boron (B) and/or zinc (Zn) concentrations usually indicate contamination with another oil type, primarily MIL-PRF-2104. Recommend resampling and retesting immediately. If new value exceeds 8.0 PPM, run check with D19-0 to ensure proper instrument function. When proper function is confirmed, report both results and suspected contamination with MIL-PRF-2104 to chain of command, maintenance chief, cognizant engineering authority (Army and Navy only), and other personnel as specified by local written procedures. Recommend flushing and retesting of contaminated pre-oilers, carts, or other reservoirs where contamination is found until both B and Zn concentrations fall below 8.0 PPM. Refer to JOAP Manual Volume II Section IX, page 9-1 for more information. Recommend segregation of confirmed or suspected contaminated stocks, and submit information (batch no., lot no., MIL-PRF, nature of problem, etc.) on such stocks through the Defense supply deficiency reporting system.

Elevated silicon (Si) concentration usually indicates contamination with soil, sand, or dust. If aluminum (Al) is also elevated, this suggests the presence of clay or soil. Recommend resampling and retesting immediately. If new value exceeds 8.0 PPM, run check with D19-0 to ensure proper instrument function. When proper function is confirmed, report both results and suspected contamination with soil, sand, or dust to chain of command, maintenance chief, cognizant engineering authority (Army and Navy only), and other personnel as specified by local written procedures. Recommend flushing and retesting of contaminated pre-oilers, carts, or other reservoirs where contamination is found until silicon concentration falls below 8.0 PPM. Refer to JOAP Manual Volume II Section IX, page 9-1 for more information. Recommend segregation of confirmed or suspected contaminated stocks, and submit information (batch no., lot no., MIL-PRF, nature of problem, etc.) on such stocks through the Defense supply deficiency reporting system.

H-57 (NAVY)
MAIN GEARBOX

JOAP ATOMIC EMISSION ROTRODE

	Fe	Ag	Al	Cr	Cu	Mg	B	Si	Zn
Abnormal Trend (PPM Increase in 10 hrs)	26		6		6	13			
Normal Range	0-85		0-20		0-20	0-42			
Marginal Range	86-105		21-25		21-25	43-52			
High Range	106-129		26-30		26-30	53-64			
Abnormal	≥130		≥31		≥31	≥65	10	10	10

Elevated boron (B) and/or zinc (Zn) concentrations usually indicate contamination with another oil type, primarily MIL-PRF-2104. Recommend resampling and retesting immediately. If new value exceeds 8.0 PPM, run check with D19-0 to ensure proper instrument function. When proper function is confirmed, report both results and suspected contamination with MIL-PRF-2104 to chain of command, maintenance chief, cognizant engineering authority (Army and Navy only), and other personnel as specified by local written procedures. Recommend flushing and retesting of contaminated pre-oilers, carts, or other reservoirs where contamination is found until both B and Zn concentrations fall below 8.0 PPM. Refer to JOAP Manual Volume II Section IX, page 9-1 for more information. Recommend segregation of confirmed or suspected contaminated stocks, and submit information (batch no., lot no., MIL-PRF, nature of problem, etc.) on such stocks through the Defense supply deficiency reporting system.

Elevated silicon (Si) concentration usually indicates contamination with soil, sand, or dust. If aluminum (Al) is also elevated, this suggests the presence of clay or soil. Recommend resampling and retesting immediately. If new value exceeds 8.0 PPM, run check with D19-0 to ensure proper instrument function. When proper function is confirmed, report both results and suspected contamination with soil, sand, or dust to chain of command, maintenance chief, cognizant engineering authority (Army and Navy only), and other personnel as specified by local written procedures. Recommend flushing and retesting of contaminated pre-oilers, carts, or other reservoirs where contamination is found until silicon concentration falls below 8.0 PPM. Refer to JOAP Manual Volume II Section IX, page 9-1 for more information. Recommend segregation of confirmed or suspected contaminated stocks, and submit information (batch no., lot no., MIL-PRF, nature of problem, etc.) on such stocks through the Defense supply deficiency reporting system.

H-57 (NAVY)
TAIL ROTOR GEARBOX

JOAP ATOMIC EMISSION ROTRODE

	Fe	Ag	Al	Cr	Cu	Mg	B	Si	Zn
Abnormal Trend (PPM Increase in 10 hrs)	23				6	13			
Normal Range	0-76				0-20	0-42			
Marginal Range	77-92				21-25	43-52			
High Range	93-114				26-30	53-64			
Abnormal	≥115				≥31+	≥65	10	10	10

Elevated boron (B) and/or zinc (Zn) concentrations usually indicate contamination with another oil type, primarily MIL-PRF-2104. Recommend resampling and retesting immediately. If new value exceeds 8.0 PPM, run check with D19-0 to ensure proper instrument function. When proper function is confirmed, report both results and suspected contamination with MIL-PRF-2104 to chain of command, maintenance chief, cognizant engineering authority (Army and Navy only), and other personnel as specified by local written procedures. Recommend flushing and retesting of contaminated pre-oilers, carts, or other reservoirs where contamination is found until both B and Zn concentrations fall below 8.0 PPM. Refer to JOAP Manual Volume II Section IX, page 9-1 for more information. Recommend segregation of confirmed or suspected contaminated stocks, and submit information (batch no., lot no., MIL-PRF, nature of problem, etc.) on such stocks through the Defense supply deficiency reporting system.

Elevated silicon (Si) concentration usually indicates contamination with soil, sand, or dust. If aluminum (Al) is also elevated, this suggests the presence of clay or soil. Recommend resampling and retesting immediately. If new value exceeds 8.0 PPM, run check with D19-0 to ensure proper instrument function. When proper function is confirmed, report both results and suspected contamination with soil, sand, or dust to chain of command, maintenance chief, cognizant engineering authority (Army and Navy only), and other personnel as specified by local written procedures. Recommend flushing and retesting of contaminated pre-oilers, carts, or other reservoirs where contamination is found until silicon concentration falls below 8.0 PPM. Refer to JOAP Manual Volume II Section IX, page 9-1 for more information. Recommend segregation of confirmed or suspected contaminated stocks, and submit information (batch no., lot no., MIL-PRF, nature of problem, etc.) on such stocks through the Defense supply deficiency reporting system.

OH-58A/C
TRANSMISSION

JOAP ATOMIC EMISSION ROTRODE

	Fe	Ag	Al	Cr	Cu	Mg	Mo	B	Si	Zn
Abnormal Trend (PPM Increase in 10 hrs)	4	2	4	3	3	4			8	
Normal Range	0-15	0-3	0-13	0-6	0-8	0-12			0-26	
Marginal Range	16-18	N/A	14-16	7	9-10	13-15			27-32	
High Range	19-23	4	17-19	8-9	11-12	16-17			33-39	
Abnormal	≥24	≥5	≥20	≥10	≥13	≥18		10	≥40	10

Fe	Main drive oil pump gearing Bearing load surfaces
Fe & Cu	Bearing assemblies
Fe & Al	Upper case and ring gear, oil pump assembly Lower mast bearing and support plate
Fe Al & Cu	Planetary bearing assemblies
Fe & Mg	Transmission lower case

Elevated boron (B) and/or zinc (Zn) concentrations usually indicate contamination with another oil type, primarily MIL-PRF-2104. Recommend resampling and retesting immediately. If new value exceeds 8.0 PPM, run check with D19-0 to ensure proper instrument function. When proper function is confirmed, report both results and suspected contamination with MIL-PRF-2104 to chain of command, maintenance chief, cognizant engineering authority (Army and Navy only), and other personnel as specified by local written procedures. Recommend flushing and retesting of contaminated pre-oilers, carts, or other reservoirs where contamination is found until both B and Zn concentrations fall below 8.0 PPM. Refer to JOAP Manual Volume II Section IX, page 9-1 for more information. Recommend segregation of confirmed or suspected contaminated stocks, and submit information (batch no., lot no., MIL-PRF, nature of problem, etc.) on such stocks through the Defense supply deficiency reporting system.

NOTES

High concentration of Fe and Mg indicates possible corrosion in the transmission lower case and metal concentration will probably increase after extended periods of inactivity.

OH-58A/C
90˚ TAIL ROTOR GEARBOX

JOAP ATOMIC EMISSION ROTRODE

	Fe	Ag	Al	Cr	Cu	Mg	Mo	B	Si	Zn
Abnormal Trend (PPM Increase in 10 hrs)	15	2	4	4	4	8			26	
Normal Range	0-50	0-5	0-11	0-14	0-14	0-27			0-86	
Marginal Range	51-62	6	12-13	15-17	15-17	28-33			87-106	
High Range	63-76	7	14-16	18-21	18-22	34-41			107-131	
Abnormal	≥77	≥8	≥17	≥22	≥23	≥42		10	≥132	10

Fe	Bevel gears Bearing load surfaces and gearlock seal spring on shaft
Fe Cu & Ag	Bearing gears and bearing assemblies
Fe & Al	Bearing liner in quill plate
Fe & Mg	Gearing and Case

Elevated boron (B) and/or zinc (Zn) concentrations usually indicate contamination with another oil type, primarily MIL-PRF-2104. Recommend resampling and retesting immediately. If new value exceeds 8.0 PPM, run check with D19-0 to ensure proper instrument function. When proper function is confirmed, report both results and suspected contamination with MIL-PRF-2104 to chain of command, maintenance chief, cognizant engineering authority (Army and Navy only), and other personnel as specified by local written procedures. Recommend flushing and retesting of contaminated pre-oilers, carts, or other reservoirs where contamination is found until both B and Zn concentrations fall below 8.0 PPM. Refer to JOAP Manual Volume II Section IX, page 9-1 for more information. Recommend segregation of confirmed or suspected contaminated stocks, and submit information (batch no., lot no., MIL-PRF, nature of problem, etc.) on such stocks through the Defense supply deficiency reporting system.

NOTES

1. Tail rotor or drive line vibration may induce temporary high level of Fe, Cu & Al.
2. High Fe & mg indicate possible corrosion in the gearing and case. Concentration will probably increase after extended periods of inactivity.
3. Inspect the aluminum wool in the oil filter cap for deterioration when excessive aluminum wear metal is detected in oil samples from OH-58 90˚ gearbox.

UH60A, EH-60A, HH-60A (ARMY)
MAIN TRANSMISSION

JOAP ATOMIC EMISSION ROTRODE

	Fe	Ag	Al	Cr	Cu	Mg	Mo	B	Si	Zn
Abnormal Trend (PPM Increase in 10 hrs)	7		2	2	4	4	2		4	
Normal Range	0-25		0-2	0-2	0-10	0-13	0-2		0-13	
Marginal Range	26-31		3	3	11-12	14-16	3		14-16	
High Range	32-37		4	4	13-14	17-19	4		17-19	
Abnormal	≥38		≥5	≥5	≥15	≥20	≥5		≥20	

WATER LIMIT: 1000 PPM

NOTES

Ag - Silver has been used in plating some splines and gears. When values greater than 5 PPM are observed, a serviceability check should be requested. Instructions for transmissions serviceability check are provided in TM 55-1520-237-23-7.

Cr/Mo - Chromium and molybdenum should not be considered critical metals unless iron is present in abnormal concentrations.

Mg/Al - Magnesium and aluminum are usually observed wherever corrosion exists. However, when iron, magnesium, and aluminum are present in abnormal concentrations, microscopic inspection of debris should be performed to determine whether metal is due to wear or corrosion.

Si - The probable sources of silicon are contamination and anti-foaming agents in lubricants. When the source of silicon is contamination, the component should be drained, flushed, serviced with new oil, and sampled after 5 hours of operation to assure removal of abrasive contaminants.

Elevated boron (B) and/or zinc (Zn) concentrations usually indicate contamination with another oil type, primarily MIL-PRF-2104. Recommend resampling and retesting immediately. If new value exceeds 8.0 PPM, run check with D19-0 to ensure proper instrument function. When proper function is confirmed, report both results and suspected contamination with MIL-PRF-2104 to chain of command, maintenance chief, cognizant engineering authority (Army and Navy only), and other personnel as specified by local written procedures. Recommend flushing and retesting of contaminated pre-oilers, carts, or other reservoirs where contamination is found until both B and Zn concentrations fall below 8.0 PPM. Refer to JOAP Manual Volume II Section IX, page 9-1 for more information. Recommend segregation of confirmed or suspected contaminated stocks, and submit information (batch no., lot no., MIL-PRF, nature of problem, etc.) on such stocks through the Defense supply deficiency reporting system.

UH60A, EH-60A, HH-60A (ARMY) (Cont.)
MAIN TRANSMISSION

NOTES

Wear particles found in an oil sample will give a false indication. Oil samples are taken from the sump, which is on the upstream side of the filter. When the rotors stop turning, the oil slowly drains and flushes the debris trapped by the filter into the sump.

The main transmission consists of a main module, two input modules and two accessory modules. The main transmission has a single lubrication system that lubricates the modules listed above as well as the gearbox driven generators. For the UH-60A, EH-60A, HH-60A, aircraft, spectrometric analysis is required, Oil physical properties should also be checked for the following: water content, viscosity (40 C & 100 C), total acid number (TAN), particle count (cleanliness), For all U.S. Army H-60 main transmissions the water content limit shall be no greater than 1000 PPM. Main transmissions above 1000 PPM of water shall require a drain and flush recommendation. If a situation exists that is not covered by the following information, or if additional information or clarification of existing information is desired, contact AMCOM Engineering, AMSRD-AMR-AE-P-M DSN: 897-9103.

UH-60L, UH-60M, EH-60L, (ARMY)
HH-60L, MH-60L, MH-60K, MH-60M
MAIN TRANSMISSION (3 Micron Filter)

NOTES

Wear particles found in an oil sample will give a false indication. Oil samples are taken from the sump, which is on the upstream side of the 3-micron filter. When the rotors stop turning, the oil slowly drains and flushes the debris trapped by the filter into the sump.

The main transmission consists of a main module, two input modules and two accessory modules. The main transmission has a single lubrication system that lubricates the modules listed above as well as the gearbox driven generators. For the UH-60L, UH-60M, EH-60L, HH-60L, MH-60L, MH-60K, and MH-60M aircraft, a 3-micron filter is used which effectively removes particles in the size range measurable by spectrometric analysis. Oil physical properties should be checked for the following: water content, viscosity (40 C & 100 C), total acid number (TAN), particle count (cleanliness), For all U.S. Army H-60 main transmissions the water content limit shall be no greater than 1000 PPM. Main transmissions above 1000 PPM of water shall require a drain and flush recommendation. . If a situation exists that is not covered by the following information, or if additional information or clarification of existing information is desired, contact AMCOM Engineering, AMSRD-AMR-AE-P-M DSN: 897-9103.

UH-60A, UH-60L, UH-60M, EH-60A, EH-60L,
HH-60A, HH-60L, MH-60K, MH-60L,
MH-60M , BLACK HAWK, (ARMY)
TAIL ROTOR GEARBOX

JOAP ATOMIC EMISSION ROTRODE

	[2]Fe	[1]Al	[1]Cu	Ag	Mg	Ti	Cr	B	Si	Zn
Abnormal Trend (PPM Increase in 10 hrs)*	9			3	9	3				
Normal Range	0-36			0-2	0-26	0-4			0-100	
Marginal Range	37-41			3	27-32	5				
High Range	42-45			4	33-40	6				
Abnormal	≥46 [2]			≥5	≥41	≥7+		10		10

[1]Refer to paragraphs 5b and 5e respectively, pages A-204-205 for specific Al and Cu wear metal guidance.
[2]Refer to paragraphs section 4 and 5 for additional guidance.

Water limit: 1000PPM (0.100%).

For the UH-60L, UH-60M, EH-60L, HH-60L, MH-60L, MH-60K, and MH-60M tail rotor gearbox, spectrometric analysis is required, Oil physical properties should also be checked for the following: water content, viscosity (40 C & 100 C), total acid number (TAN), particle count (cleanliness.

Additional guidance specific to the Army H-60 Black Hawk helicopter is located on page A-210.

Elevated boron (B) and/or zinc (Zn) concentrations usually indicate contamination with another oil type, primarily MIL-PRF-2104. Recommend resampling and retesting immediately. If new value exceeds 8.0 PPM, run check with D19-0 to ensure proper instrument function. When proper function is confirmed, report both results and suspected contamination with MIL-PRF-2104 to chain of command, maintenance chief, cognizant engineering authority (Army and Navy only), and other personnel as specified by local written procedures. Recommend flushing and retesting of contaminated pre-oilers, carts, or other reservoirs where contamination is found until both B and Zn concentrations fall below 8.0 PPM. Refer to JOAP Manual Volume II Section IX, page 9-1 for more information. Recommend segregation of confirmed or suspected contaminated stocks, and submit information (batch no., lot no., MIL-PRF, nature of problem, etc.) on such stocks through the Defense supply deficiency reporting system.

Elevated silicon (Si) concentration usually indicates contamination with soil, sand, or dust. If aluminum (Al) is also elevated, this suggests the presence of clay or soil. Recommend resampling and retesting immediately. If new value exceeds 8.0 PPM, run check with D19-0 to ensure proper instrument function. When proper function is confirmed, report both results and suspected contamination with soil, sand, or dust to chain of command, maintenance chief, cognizant engineering authority (Army and Navy only), and other personnel as specified by local written procedures. Recommend flushing and retesting of contaminated pre-oilers, carts, or other reservoirs where contamination is found until silicon concentration falls below 8.0 PPM. Refer to JOAP Manual Volume II Section IX, page 9-1 for more information. Recommend segregation of confirmed or suspected contaminated stocks, and submit information (batch no., lot no., MIL-PRF, nature of problem, etc.) on such stocks through the Defense supply deficiency reporting system.

UH-60A, UH-60L, UH-60M, EH-60A, (Cont.)
EH-60L, HH-60A, HH-60L, MH-60K,
MH-60L, MH-60M, BLACK HAWK (ARMY)
TAIL ROTOR GEARBOX

The following information is provided to assist oil analysis laboratory personnel in determining tail rotor gearbox condition based upon an analysis of the gearbox lubricant. The following information does not cover every possible wear mode or operational characteristic. The information is intended to assist the lab personnel in making a determination of the health of the gearbox. If a situation exists that is not covered by the following information, or if additional information or clarification of existing information is desired, contact AMCOM Engineering, AMSRD-AMR-AE-P-M DSN: 897-9103.

1. The BLACK HAWK tail rotor gearbox changes the speed and angle of drive from the tail drive shaft to the tail rotor blades and pitch control mechanism. See Figure A-1. The major components of the tail rotor gearbox include the housings (input, center, and output), the input bevel pinion and the output bevel gear, four (4) tapered roller bearings, an input flange, an inboard retention plate, and input and output seals. See Figure A-2 for the location of the major components. The tail rotor gearbox is operated with the tail rotor servo and pitch control shaft installed into the gearbox. See Figure A-3.

2. The tail rotor gearbox utilized a self-contained splash-type lube system without an oil filter. Normal wear particles will increase in number until the gearbox is drained and flushed. Either DOD-L-85734, MIL-L-23699, or MIL-L-7808 lubricant is used in the gearbox. The gearbox contains approximately 2.75 pints of lubricant. The gearbox lubricant is replaced every 720 flight hours.

a. MIL-L-23699 is the most common lubricant in use in the field. It is being replaced by the DOD-L-85734 lubricant, which is now the primary lubricant. DOD-L-85734 lubricant is similar to MIL-L-23699 (e.g., it has the same viscosity), but has the addition of EP (Extreme Pressure) additives to improve its performance with loaded gear meshes. Field units should notify the lab if a change to DOD-L-85734 lubricant in order to establish a baseline for this lubricant. Establishment of a baseline is essential in analyzing tail rotor gearboxes using the DOD-L-85734 lubricant. MIL-L-7808 lubricant will continue to be used for cold-weather operation.

b. When used in gearboxes which had been operated with MIL-L-23699 or MIL-L-7808 lubricant, the DOD-L-85734 lubricant has a detergent effect. This may cause an increase in wear metal levels as seen in spectrometric analysis of oil samples. Lab personnel should use caution when analyzing oil samples in these cases, as the increase in wear metal levels may give the same indications that component wear would give. After gearboxes which have changed to DOD-L-85734 have operated for 50 - 100 flight hours, have the unit perform a drain and flush to remove wear metals from the gearbox.

c. Oil analysis laboratory personnel should not hesitate to request a drain and flush of the tail rotor gearbox if they believe it is warranted. Removal of contaminants and wear particles from the gearbox lubricant is the best method to prolong gearbox life and prevent future problems. Drain and flush procedures are given in paragraph 7 below.

3. Oil analysis lab personnel may receive oil samples either from a regular interval sampling, or whenever the field unit experiences a problem with the tail rotor gearbox on their aircraft. The regular sampling interval is 40 flight hours. The most common cause for field units to send a special sample to the oil analysis laboratory is when there are chips present in the gearbox. Table A-1 gives the chip evaluation criteria for tail rotor gearboxes. These criteria may be used by laboratory personnel to assist in the evaluation of the condition of a tail rotor gearbox from which chips were identified.

UH-60A, UH-60L, UH-60M, EH-60A, (Cont.)
EH-60L, HH-60A, HH-60L, MH-60K,
MH-60L, MH-60M, BLACK HAWK (ARMY)
TAIL ROTOR GEARBOX

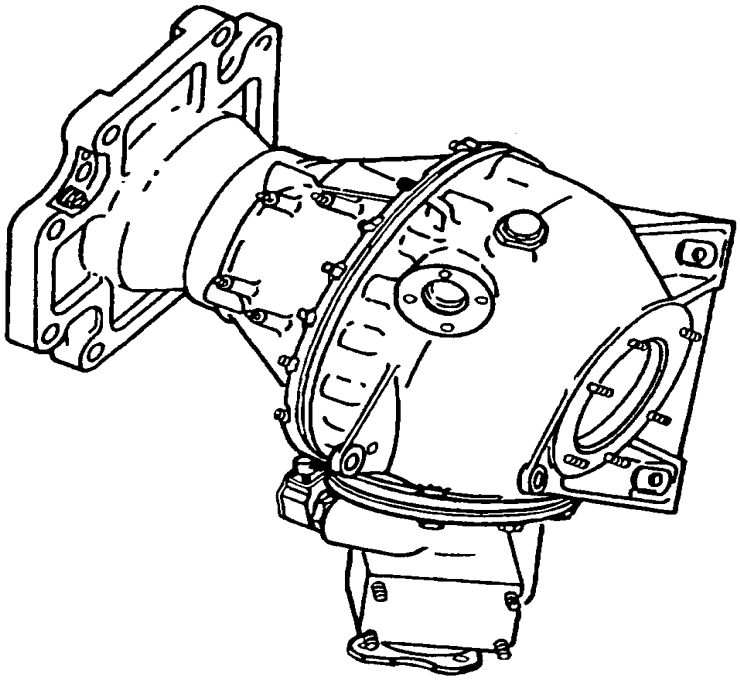

Figure A-2. Tail Rotor Gearbox

UH-60A, UH-60L, UH-60M, EH-60A, (Cont.)
EH-60L, HH-60A, HH-60L, MH-60K,
MH-60L, MH-60M, BLACK HAWK (ARMY)
TAIL ROTOR GEARBOX

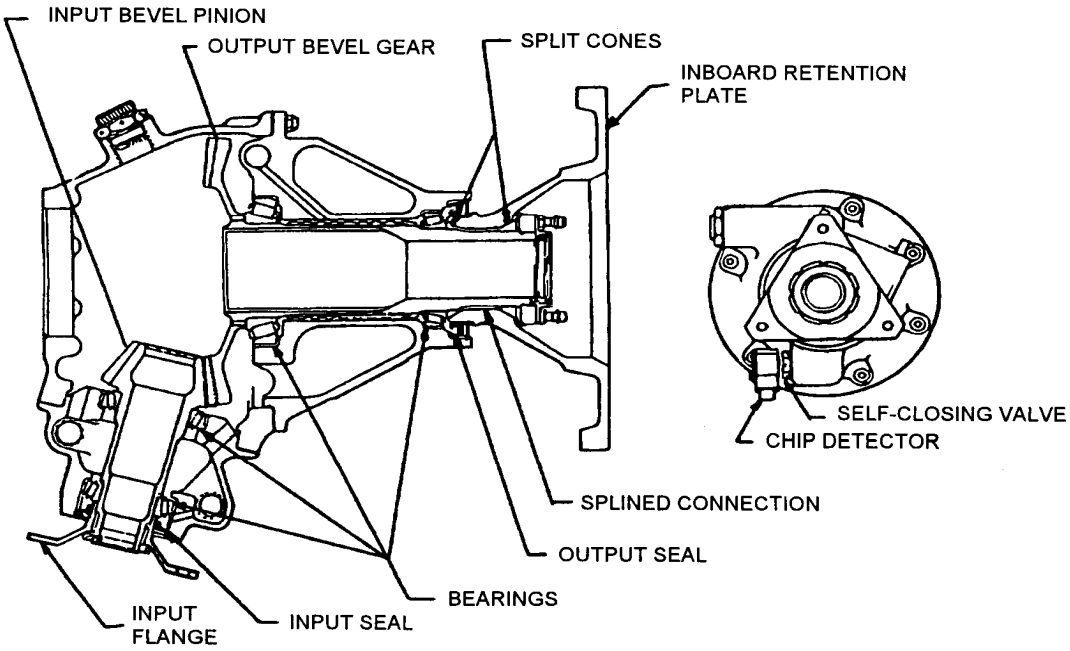

Figure A-3. Tail Rotor Gearbox Nomenclature

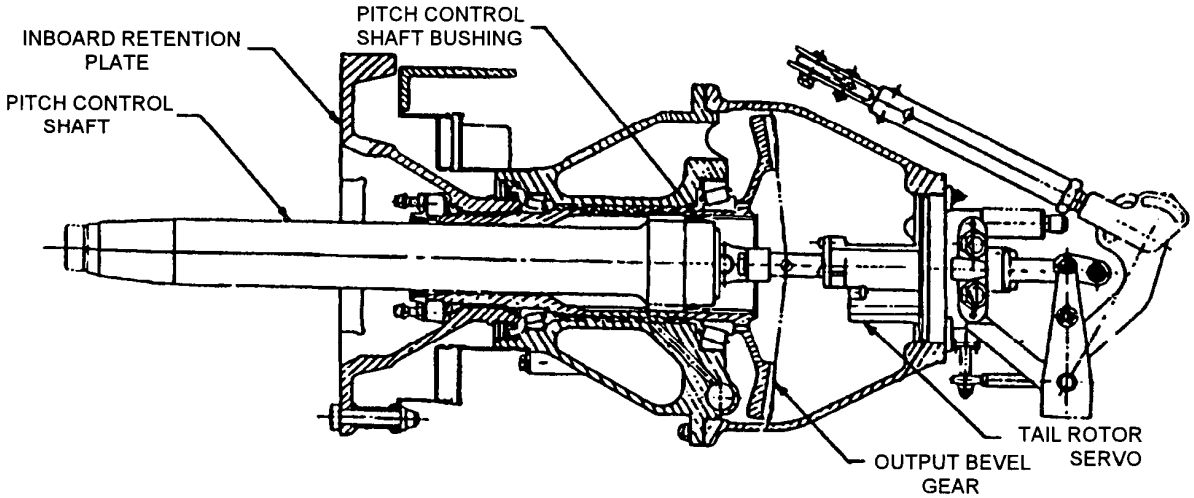

Figure A-4. Tail Rotor Gearbox, Tail Rotor Servo, & Pitch Control Shaft Assembly

Table A-2. Chip Evaluation Criteria

MATERIAL	TYPE - QUANTITY - SIZE	ACTION REQUIRED
Magnetic (Steel)	Particles too small to measure	None
	Less than 10 particles, none over 1/32" diameter and 1/4" long.	Perform a serviceability check IAW applicable aircraft maintenance manual.
	Splinters or granular particles.	Perform a serviceability check IAW applicable aircraft maintenance manual.
	Chips exceeding the size and/or number criteria above.	Replace tail rotor gearbox.
Non-Magnetic	All particle sizes.	Perform a serviceability check IAW applicable aircraft maintenance manual.

4. All oil samples submitted for analysis should be checked for water contamination. The limit is 1000 PPM or 0.100%. Gearboxes with water contamination should be drained and flushed per paragraph 7 below in an attempt to prevent gearbox housing corrosion. See paragraph 6b for further information.

5. Sources of wear metal elements in oil samples are given in Table A-3.

a. Iron (Fe) - Iron wear particles may indicate wear of the gears, bearings, bearing liners, or pitch control shaft. For further information on iron wear metal, see paragraph 6a below.

b. Aluminum (Al) - Aluminum wear particles may indicate wear of the inboard retention split cones (copper would also be present), or corrosion of the input pinion plug. Aluminum is not used as a primary means of detecting component wear. If titanium is normal, no action is required.

c. Titanium (Ti) - Titanium wear particles may indicate wear of the inboard retention plate splines or the input flange splines. Wear of the inboard retention plate splines would also result in high aluminum and copper wear metal levels. Wear of the input flange splines would also result in high aluminum wear metal levels. Performance of torque checks on the nuts/bolts connecting the input flange/inboard retention plate to the gearbox is used to determine if wear of these splines is present. See also paragraph 6c and 6d below.

d. Magnesium (Mg) - Magnesium wear particles usually indicate that corrosion of the gearbox housing(s) is present. The most common location of gearbox corrosion is the tail rotor servo bore area. See also paragraph 6b below.

NOTES

The unit will submit a baseline sample 9 – 13 hours after installation of new oilite bushing.

The oil may not have been changed when the pitch change shaft with the oilite bushing was installed in the tail rotor gearbox

UH-60A, UH-60L, UH-60M, EH-60A, (Cont.)
EH-60L, HH-60A, HH-60L, MH-60K,
MH-60L, MH-60M, BLACK HAWK (ARMY)
TAIL ROTOR GEARBOX

e. Copper (Cu) – Copper is not a critical wear metal in the H-60 tail rotor gearbox. Copper usually indicates wear on the pitch change shaft oilite bronze bushing from sliding contact with the inner diameter of the steel output bevel gear. Iron from the bevel gear will often accompany copper. Wear on the oilite bushing is common and is the subject of dimensional inspection during scheduled removals. Wear is typically greater in the first 100 – 200 flight hours on a new bushing installation. Wear is the greatest with a new bushing in a 70358-26600-044 tail rotor gearbox. (The –044 gearbox contains the output bevel gear with shotpeened inner diameter, which has a rougher surface finish, thereby causing greater abrasion on the oilite bushing.)

Because wear is common and regular scheduled inspections gage wear on the oilite bushing, limited maintenance action is recommended for copper or copper/iron contamination in the first 100 hours of service on a new bushing. The only exception to this is if copper levels exceed 200 PPM and/or copper is accompanied by other critical wear metals. (See Table A-2 for applicable maintenance actions and other critical wear metal criteria.) Between 100 – 200 flight hours, maintenance actions should be limited to oil change if the copper level exceeds 100 PPM, provided other critical wear metals are not involved. After 200 flight hours, a dimensional inspection of the bushing should be performed only when copper levels exceed 75 PPM for two consecutive monitoring intervals. Other sources of copper in the tail rotor gearbox are the aluminum bronze split cones on the inboard retention plate and the cage material on the duplex ball bearing in the tail rotor servo coupling. Split cones can contribute copper and aluminum to the oil if wear/fretting occurs. (See supplementary information for aluminum.) The duplex ball bearing is inside the pitch change shaft and is not normally exposed to oil flow.

Table A-3. Excessive Copper Wear

Hours (since new bushing)	Cu (PPM)	Action
≤ 100	≤ 200	No maintenance required
≤ 100	> 200	Drain, refill. Sample @ 25 hours
>100 & ≤ 200	≤ 100	No maintenance required
>100 & ≤ 200	> 100	Drain, refill @ 200 hrs since new bushing
> 200	≤ 75	No maintenance required
> 200	> 75*	Perform dimensional inspection of bushing

* For two consecutive sampling periods.

f. Silver (Ag) - Silver is used as plating on the input pinion and output gear splines. Presence of silver wear particles usually indicates spline wear is occurring. Performance of torque checks on the nuts/bolts connecting the input flange/inboard retention plate to the gearbox is used to determine if wear of these splines is present. See also paragraphs 6c and 6d below.

g. Chromium (Cr) - Chromium is present in some steels, and as a plating on the input/output seal wear sleeves. The presence of chromium wear particles may indicate wear of the seal sleeves, which would be detected through excessive seal leakage.

h. Silicon (Si) - Silicon should be monitored due to its potential for causing abrasive wear inside the gearbox. Usual sources are contamination from dirt and sand, or from silicon-based grease through the pitch control shaft seal. Drain and flushes are recommended for silicon levels over 100 PPM.

UH-60A, UH-60L, UH-60M, EH-60A, (Cont.)
EH-60L, HH-60A, HH-60L, MH-60K,
MH-60L, MH-60M, BLACK HAWK (ARMY)
TAIL ROTOR GEARBOX

Table A-4. Element Sources

Element	Component	Source
Fe (Iron)	Input pinion	Wear with gear.
	Output gear	Wear with pinion.
	Bearing rollers, races and cages	Rolling wear.
	Pitch change shaft	Wear with gear I.D.
Al (Aluminum)	Input pinion plug	Corrosion.
	Input flange[1]	Seal wear.
	Inboard retention Plate [1]	Spline wear.
	Split cones[1]	Wear with gear and retention plate.
	Pitch control shaft bushing[1]	Wear with gear I.D.
Ti (Titanium)	Input flange	Seal wear.
	Inboard retention plate	Spline wear.
Mg (Magnesium)	Housings.	Corrosion.
	Oil spiral.	Corrosion.
Cu (Copper)	Split cones	Wear with gear and retention plate.
	Pitch control shaft bushing	Wear with gear I.D.
Ag (Silver)	Input pinion [1]	Spline wear.
	Output pinion[1]	Spline wear.

1. Indicates that the element is not the primary constituent for this component.
Trace amounts of C (Carbon), Mn (Manganese), P (Phosphorus), S (Sulfur), Ni (Nickel), Cr (Chromium), Mo (Molybdenum), Zn (Zinc), Sn (Tin), Pb (Lead), and V (Vanadium) may also be detected. No action is required.

6. Important tail rotor gearbox wear modes are shown in Table A-4. Each wear mode is further discussed below.

a. Gear/bearing wear - Gearbox chip lights indication should be used as the primary indicator of gear and bearing wear. Chips present in the gearbox should be evaluated per Table A-1. Trending of chip sizes/numbers over a time interval should be accomplished when chips are identified (either through analysis at the oil analysis laboratory or from chip lights) but do not meet the removal criteria in Table A-1. Lab personnel may require more frequent sampling if their trending analysis indicates the remove criteria of Table A-1 may be exceeded before the next regularly scheduled sampling is due. The gearbox should be drained and flushed (reference paragraph 7) as needed to remove any particles that may cause further wear if allowed to remain inside the gearbox. Indications of iron wear metal in spectrometric analysis samples without accompanying chip lights, Ferrographic, or microscopic indications shall be tracked but shall not be cause for recommendations for removal/replacement of the gearbox.

UH-60A, UH-60L, UH-60M, EH-60A, (Cont.)
EH-60L, HH-60A, HH-60L, MH-60K,
MH-60L, MH-60M, BLACK HAWK (ARMY)
TAIL ROTOR GEARBOX

Table A-5. Wear Modes and Diagnostic Methods

Wear Mode	Diagnostic Method	Criteria
Gear Wear.	Chip lights -or- Ferrographic/microscopic.	Table 1. Chip size/count.
Bearing Wear.	Chip lights -or- Ferrographic/microscopic.	Table 1. Chip size/count.
Housing Corrosion.	Spectrometric.	Magnesium PPM level.
Inboard Retention Plate/ Output Gear Spline Wear.	Spectrometric **-and-** Inboard retention plate nut bolt torque check (per TM55-1520-237-23)	Titanium and Aluminum PPM levels. Failure to stabilize torque (per TM55-1520-237-23)
Split Cone Wear.	Spectrometric **-and-** Inboard retention plate nut Bolt torque check (per TM55-1520-237-23)	Copper and Aluminum PPM levels. Failure to stabilize torque (perTM55-1520-237-23)
Pitch Control Shaft Bushing Wear.	Inspection (Phase, per TM55-1520-237-PMS-2)	Bushing OD (per TM55-1520-237-PMS-2)

b. Housing corrosion - Housing corrosion is identified by an increase in magnesium wear metal levels in spectrometric analysis results. At the first instance of an upward trend in magnesium levels, recommend the unit drain and flush the tail rotor gearbox (reference paragraph 7) to insure any water contamination is removed. If magnesium wear metal levels increase past the high range, recommend the unit remove the tail rotor servo and inspect the servo bore area and the gearbox ID for signs of corrosion. If corrosion is found it should be repaired per TM55-1520-237-23. If the corrosion cannot be repaired in the field, the gearbox should be replaced. If corrosion cannot be identified, and magnesium wear metal levels continue to increase into the abnormal range, the gearbox should be removed. Lab personnel may require more frequent sampling if a trending analysis indicates the magnesium wear metal level may exceed the abnormal range before the next regularly scheduled sampling is due.

c. Inboard retention plate/output gear spline wear - Wear of the inboard intention plate/output gear splines is characterized by an increase in the levels of Ti (titanium), Al (aluminum), and Ag (silver) wear metals. An increase in aluminum wear metal levels alone, without an accompanying rise in titanium wear metal levels, does not explicitly indicate spline wear. Titanium and/or aluminum levels may be in the marginal/high range on new gearboxes (less than 100 flight hours since new/overhauled) due to normal break-in wear of the internal components. If spline wear is suspected (titanium in the high/abnormal range), recommend that the unit perform an inboard retention plate nut bolt torque check, and report their findings (bolt torques) and observations to the lab. Do not recommend removal of the inboard retention plate to inspect the split cones/splines. This action should only be taken as a direct result of the torque check. If no action is required from this check, continue to track titanium levels. Do not recommend further action unless titanium levels increase over an additional 100 flight hours. If the levels increase over this interval, recommend another inboard retention plate nut bolt/input flange nut torque check be accomplished.

d. Split cone wear - Wear of the split cones is not easily identified in the tail rotor gearbox. Wear of the split cones would result in an increase in copper and aluminum wear metal levels. However, increases in copper wear metal levels due to wear of the pitch control shaft bushing usually masks any increase in copper levels associated with wear of the split cones. The presence of high levels of aluminum in spectrometric analysis is not indicative of split cone wear. Wear of the inboard retention plate spline and of the pitch control shaft bushing also contribute to high aluminum wear metals levels.

e. Pitch control shaft bushing wear - Wear of this bushing is characterized by high (in some cases, extremely high - up to 200 PPM) levels of copper wear metal in the oil samples. This is especially common on newer gearboxes. This wear is expected due to normal wear-in and is not cause for additional maintenance. The unit is required to perform a dimensional inspection of this bushing for wear every 720 hours. A dimensional inspection of the bushing OD may also be recommended when the copper level exceeds 75 PPM for two consecutive 40 hour sampling periods.

7. Field units should use the following drain and flush procedures to insure all contaminants/wear metals are removed from the inside of the gearbox.

a. Remove filler cap.

b. Drain gearbox.

c. Remove chip detector self-closing valve.

d. Place a funnel under the chip detector self-closing valve opening. Place a 2 gallon container under the funnel.

CAUTION

Damage to equipment will occur if foreign objects enter gearbox. Foreign objects may enter gearbox when tail rotor servo is removed. Ensure that no foreign objects enter the gearbox during performance of this task.

e. Remove tail rotor servo.

f. Inspect inside of tail rotor gearbox, especially the inside diameter of the input bevel pinion, for buildup of sludge and debris accumulation. Remove sludge/debris using a clean dry cloth. Insure no debris is left inside the gearbox.

g. Flush gearbox with clean lube oil. Repeat using clean oil until oil drained from gearbox is clean with no trace or debris. Insure oil stream is directed against entire inside of gearbox to insure all debris is flushed from the gearbox.

h. Install chip detector self-closing valve, chip detector, and electrical connector.

i. Install tail rotor servo.

j. Fill gearbox with proper amount of oil.

k. Reinstall filler cap.

l. Make sure area is clean and free of foreign material.

UH-60A, UH-60L, UH-60M, EH-60A, (Cont.)
EH-60L, HH-60A, HH-60L, MH-60K,
MH-60L, MH-60M, BLACK HAWK (ARMY)
TAIL ROTOR GEARBOX

The following requirements are for oil sampling of the tail rotor gearbox used on Army H-60 Black Hawk Helicopters:

1. Water content shall be checked on every sample. Maximum water concentration is 1000 PPM.

2. The primary serviceability criteria for this component is the presence of chips sufficient to cause a chip light indication. Oil analysis shall be used primarily to trend increases in Fe levels, and to ensure that the lubricant condition is acceptable, and that the lubricant is free of harmful contamination.

3. Spectrometric criteria are given in TM 38-301 except as follows. A spectrometric analysis shall be conducted on all samples. Results shall be interpreted as follows:

a. Fe - If the iron concentration is greater than 46 PPM, or if an increase of more than 18 PPM occurs between any two consecutive samples, a Ferrographic or microscopic analysis must be preformed. The results of the Ferrographic or microscopic analysis must support the spectrometric analysis findings before a recommendation for removal is issued.

b. Mg - If the magnesium concentration exceeds 50 PPM, have the unit replace the lubricant, and inspect the gearbox for signs of corrosion, especially at the interface between the center housing and the servo. Continue to monitor the magnesium level. If magnesium continues to increase, have the unit drain and flush the component at the next PMS-2 phase inspection. More frequent lubricant change is not required. Removal of the gearbox shall be based upon the results of the gearbox corrosion inspection.

c. Si - If silicon concentrations exceed 100 PPM, have the unit replace the lubricant. If silicon continues to increase, have the unit drain and flush the component at the next PMS-2 phase inspection. More frequent lubricant change is not required.

d. Cr - Do not track chromium. Chromium is used as a plating on seal wear sleeves and the pitch change shaft. Other inspections are in place to maintain these items.

e. Al, Ni, Sn, Pb, Ag, Na, B, Mo, Zn - Do not track these elements. Do not recommend maintenance based on concentrations of these elements.

4. MIL-L-23699E C/I (Corrosion Inhibiting) oil exhibits a detergent action when added to or used in place of MIL-L-23699D oil in tail rotor gearboxes. This could cause false high Fe concentration levels in spectrometric analysis results. Request AOAP laboratories use the following procedure to determine if Fe concentration levels flagged during spectrometric analysis results were the result of detergency action:

a. Perform a spectrometric analysis of the oil sample.

b. Record the Fe concentration (PPM level).

c. Filter the sample through a Millipore (0.45 micron) filter.

d. Rerun the spectrometric analysis using the filtered sample.

UH-60A, UH-60L, UH-60M, EH-60A, (Cont.)
EH-60L, HH-60A, HH-60L, MH-60K,
MH-60L, MH-60M, BLACK HAWK (ARMY)
TAIL ROTOR GEARBOX

e. If there is no debris present in the filter and the level of Fe in the second spectrometric analysis remains at approximately the same level as the first sample, then the Fe in the sample is in the form of soluble iron. If there is a difference, then the difference should be used when evaluating the engine IAW TM 38-301-3 guidelines. However, if nonmagnetic wear particles are present, perform the test in paragraph f.

f. Ferrographic analysis will be performed using the Direct Reading (DR) ferrograph to record the small to large particle wear particle readings. If they are within prescribed ratio limits, then a Ferrogram will not be required. If they exceed the prescribed DR limits, then a Ferrogram will be performed to validate the abnormal internal wear. Maintenance recommendation will then be made in accordance with component guidelines.

UH-60A, UH-60L, UH-60M, EH-60A,
EH-60L, HH-60A, HH-60L, MH-60K,
MH-60L, MH-60M (ARMY)
INTERMEDIATE GEARBOX (ARMY)

JOAP ATOMIC EMISSION ROTRODE

	Fe	Ag	Al	Mg	Ti	Cu	B	Si	Zn
Abnormal Trend (PPM Increase in 10 hrs)	9	3	3	9	3	9			
Normal Range	0-31	0-2	0-2	0-13	0-3	0-11		0-60	
Marginal Range	32-44	3	3	14-24	4	12-21			
High Range	45-50	4	4	25-32	5	22-29			
Abnormal	≥51	≥5	≥5	≥33	≥6	≥30	10		10

WATER LIMIT: 1000 PPM

The intermediate gearbox has a self-contained splash-lube oil system without an oil filter. Normal wear particles will continue to increase until the gearbox is drained and serviced in accordance with the general aircraft information manual. For the UH-60L, UH-60M, EH-60L, HH-60L, MH-60L, MH-60K, and MH-60M intermediate gearbox, spectrometric analysis is required, Oil physical properties should also be checked for the following: water content, viscosity (40 C & 100 C), total acid number (TAN), particle count (cleanliness.

All oil samples shall be checked for water content. Water limit: 1000 PPM. Water in the oil can lead to corrosion which will cause iron and/or magnesium wear metals to appear in the oil analysis. The following supplementary information describes sources of individual wear metals and recommended maintenance actions depending on contamination level and trend. For the UH-60A, UH-60L, UH-60M, EH-60A, EH-60L, HH-60A, HH-60L, MH-60L, MH-60K, and MH-60M aircraft, If a situation exists that is not covered by the following information, or if additional information or clarification of existing information is desired, contact AMCOM Engineering, AMSRD-AMR-AE-P-M DSN: 897-9103.

Elevated boron (B) and/or zinc (Zn) concentrations usually indicate contamination with another oil type, primarily MIL-PRF-2104. Recommend resampling and retesting immediately. If new value exceeds 8.0 PPM, run check with D19-0 to ensure proper instrument function. When proper function is confirmed, report both results and suspected contamination with MIL-PRF-2104 to chain of command, maintenance chief, cognizant engineering authority (Army and Navy only), and other personnel as specified by local written procedures. Recommend flushing and retesting of contaminated pre-oilers, carts, or other reservoirs where contamination is found until both B and Zn concentrations fall below 8.0 PPM. Refer to JOAP Manual Volume II Section IX, page 9-1 for more information. Recommend segregation of confirmed or suspected contaminated stocks, and submit information (batch no., lot no., MIL-PRF, nature of problem, etc.) on such stocks through the Defense supply deficiency reporting system.

Fe - Iron may indicate wear or corrosion of input pinion gear, output bevel gear, bearings, or liners. If iron level enters marginal or high range, recommendation shall be to "Submit oil samples approximately each 10 flight hours for the next 30 flight hours. Do not change oil at this time. If iron level does not increase to abnormal upward trend occurs, change oil to remove potentially abrasive iron particles and return to normal sampling". If abnormal

UH-60A, UH-60L, UH-60M, EH-60A, (Cont.)
EH-60L, HH-60A, HH-60L, MH-60K,
MH-60L, MH-60M (ARMY)
INTERMEDIATE GEARBOX (ARMY)

iron level or abnormal upward trend occurs, recommendation shall be to "Change oil, submit sample after initial turn-up, and submit samples approximately each 10 flight hours for next 30 flight hours. If iron level remains below marginal range and non abnormal upward trend occurs within this 30 hour period, return to normal sampling". If iron level climbs to marginal range or above or if abnormal upward trend occurs within this period, recommendation shall be to "Perform serviceability check of intermediate gearbox in accordance with aircraft general information manual."

Ag - Primary source of silver in the intermediate gearbox is plating on male splines on the input opinion and output bevel gears. These splines mate with the input and output flange splines. Though not in wetted area of gearbox, wear particles can in some cases migrate through faying surfaces into oil system. Secondary source of silver in intermediate gearbox is plating on inner diameters of input and output flange sleeves. These surfaces are press fit onto flanges and are not subject to normal wear. If silver level enters marginal or high range, recommendation shall be to "Submit oil samples approximately each 10 flight hours for the next 30 flight hours. Do not change oil at this time. If silver level does not increase to abnormal range and no abnormal upward trend occurs within this period, change oil at the end of the 30 hour period and return to normal sampling". If silver level enters abnormal range, or if abnormal upward trend in silver occurs, recommendation shall be to discontinue flight operations and check for proper torque on input and output flange nuts per transmission system maintenance manual. If proper torque is confirmed, recommendation shall be to "Change oil, submit oil sample after initial turn-ups, and submit oil sample approximately each 10 flight hours for the next 30 flight hours. If silver level remains below marginal range and no abnormal upward trend occurs within this 30 flight hour period, return to normal sampling". If silver level returns to marginal range or above or if abnormal upward trend in silver level occurs within this 30 flight hour period, recommendation shall be to "Immediately discontinue further flight operations, remove input and output flanges, and inspect flange splines and gear splines for fretting/wear in accordance with system maintenance manual".

Al - There are two components in the intermediate gearbox that might produce aluminum wear particles under specific wear conditions. Wear/fretting on the input and output flanges can produce aluminum and titanium. A third and fourth component, the input pinion and output bevel gear plugs, are 2024 aluminum, but are not normally subject to service wear. If aluminum level enters marginal or high range, recommendation shall be to "Submit oil samples approximately each 10 flight hours for the next 30 flight hours. Do not change oil at this time. If contamination does not increase to abnormal range and no abnormal upward trend occurs at any time within this period, change oil and return to normal sampling". If aluminum level enters abnormal range or if abnormal upward trend occurs, recommendation shall be to "Discontinue flight operations and check for proper torque on the input and output flange nuts in accordance with transmission system maintenance manual". If proper torque is confirmed, recommendation shall be to "Change oil and submit oil sample after initial turnup and approximately each 10 flight

UH-60A, UH-60L, UH-60M, EH-60A, (Cont.)
EH-60L, HH-60A, HH-60L, MH-60K,
MH-60L, MH-60M (ARMY)
INTERMEDIATE GEARBOX (ARMY)

hour period, return to normal sampling". If aluminum level returns to high or abnormal range, or if abnormal upward trend recurs at any time within this 30 flight hour period, recommendation shall be to immediately discontinue further flight operations, remove input and output flange and inspect flange splines for fretting/wear in accordance with transmission system maintenance manual.

Mg - With a new or freshly reworked gearbox, magnesium usually indicates minor manufacturing/assembly debris from housings. Otherwise, magnesium contamination indicates internal corrosion or abrasive wear. Magnesium components in the intermediate gearbox include the input housing, center housing, output housing, and the lubrication spiral which provides oil to the output bearing on the output bevel gear. Due to moisture accumulation, vulnerability to corrosion is increased if intermediate gearbox has been serviced but has not been operational for an extended period. If corrosion occurs due to moisture contamination, magnesium is sometimes accompanied by iron. If magnesium level enters marginal or high range, recommendation shall be to "Sample at approximately 10 flight hours interval for next 30 flight hours. Do not change oil at this time. If magnesium level does not increase to abnormal range and no abnormal upward trend occurs in this initial 30 flight hour period, return to normal sampling". Maintain normal sampling interval thereafter until abnormal level or abnormal upward trend occurs. Due to relative softness of magnesium alloys in this gearbox, risk of abrasion is not sufficient to justify oil change unless abnormal upward trend occurs or magnesium level enters abnormal range. If magnesium level enters abnormal range or if abnormal upward trend occurs, recommendation shall be to "change oil, submit turn-up sample, and submit samples approximately 10 flight hours for next 30 flight hours. If magnesium level remains below marginal level and no abnormal upward trend occurs within this 30 flight hour period, return to normal sampling." If magnesium level returns to marginal range or above, or if abnormal upward trend occurs, recommendation shall be to "Submit oil samples approximately each 10 flight hours until intermediate gearbox can be removed due to internal corrosion/wear".

Ti - Titanium particles may be indicative of fretting/wear on the input and output flange splines. Aluminum wear particles should accompany the titanium, since there is aluminum in the titanium alloy for both flanges. If titanium level enters marginal or high range, recommendation shall be to "Submit oil samples approximately each 10 flight hours for the next 30 flight hours. Do not change oil at this time. If titanium level does not increase to abnormal range during this period, and no abnormal upward trend occurs, change oil at the end of the 30 hour period to remove potentially abrasive titanium particles, and return to normal sampling." If titanium level enters abnormal range, or if abnormal upward trend in titanium occurs, recommendation shall be to "Discontinue flight operations and check for proper torque on input and output flange nuts in accordance with transmission system maintenance manual". If proper torque is confirmed, recommendation shall be to "Change oil, submit oil sample after initial turn-up, and submit oil sample approximately each 10 flight hours for the next 30 flight hours. If titanium level remains below marginal range and no abnormal upward trend occurs by

UH-60A, UH-60L, UH-60M, EH-60A, (Cont.)
EH-60L, HH-60A, HH-60L, MH-60K,
MH-60L, MH-60M (ARMY)
INTERMEDIATE GEARBOX (ARMY)

the end of this 30 flight hour period, return to normal sampling". If titanium level returns to marginal range or above, or if abnormal upward trend in

titanium level recurs at any time within this 30 flight hour period, recommendation shall be to "Immediately discontinue further flight operations, remove input and output flanges and inspect flange splines and bevel gear splines for fretting/wear in accordance with transmission system maintenance manual".

Cr - Chromium in the intermediate gearbox indicates wear of input and/or output flange sleeves from seal rubbing. Normal service wear on either sleeve is benign and requires no maintenance action until leakage rate exceeds allowable limits.

Cu - Copper is an alternative to silver plating on the splines of the input pinion and output bevel gears. If copper level enters marginal or high range, recommendation shall be to "Submit oil samples approximately each 10 flight hours for the next 30 flight hours. Do not change oil at this time. If copper level does not increase to abnormal range and no abnormal upward trend occurs within this period, change oil at the end of the 30 hour period and return to normal sampling". If copper level enters abnormal range, or if abnormal upward trend in copper occurs, recommendation shall be to discontinue flight operations and check for proper torque on input and output flange nuts in accordance with transmission system maintenance manual". If proper torque is confirmed, recommendation shall be to "Change oil, submit oil sample after initial turn-up, and submit oil sample approximately each 10 flight hours for the next 30 flight hours. If copper level remains below marginal range and no abnormal upward trend occurs within this 30 flight hour period, return to normal sampling". If copper level returns to marginal range or above or if abnormal upward trend in copper level occurs within this 30 flight hour period, recommendation shall be to "Immediately discontinue further flight operations, remove input and output flanges, and inspect flange splines and gear splines for fretting/wear in accordance with transmission system maintenance manual".

Ni - Nickel is a component of steels used in gears, bearings, and sleeves in this gearbox. It is also used as a base plating for the chrome layer used on the input and output flange sleeves. Because plating applications are under 0.005-0.007 inch layer of chrome, wear on nickel plating would be preceded by abnormal levels of chromium. More likely source of nickel is wear or corrosion of a gear, bearing, or sleeve. Because steels will normally produce iron in greater quantity, iron level is used for maintenance decisions on these components (See supplementary information above on iron).

Si - Silicon is not a critical wear metal in the intermediate gearbox, but should be monitored due to the potential for abrasion if levels grow too high. The probable source of silicon is contamination from sand. Oil change shall be recommended for verified silicon level over 60 PPM.

Pb Lead may appear, but does not impact operation of aircraft. Continue to operate aircraft with no corrective action required.

SH-60B, SH-60F, HH-60H, MH-60R, MH-60S, VH-60N
MAIN TRANSMISSION

1. The SH-60B, SH-60F, HH-60H, MH-60R, MH-60S and VH-60N main transmission consists of a main module, two input modules and two accessory modules. The main transmission has a single lubrication system that lubricates the modules listed above as well as the gearbox driven generators.

2. For the SH-60B, SH-60F, HH-60H, MH-60S, MH-60R (with main module 70351-38100) and VH-60N (with main module 70351-84100), a 3-micron filter is used which effectively removes particles in the size range measurable by spectrometric analysis.
For these aircraft, only aqua-test shall be performed and for all main transmissions, water content limit shall be 1200 PPM (0.120%). For all configurations of main transmissions, water content that exceeds 1500 PPM shall result in a laboratory recommendation “J”: Change oil; sample after first flight. Water content between 1200 and 1500 PPM shall result in a laboratory recommendation “C”: do not change oil; resample after first flight. If resample results in water content still above 1200 PPM, laboratory recommendation shall be “J”: change oil; sample after first flight.

NOTES

Wear particles found in an oil sample will give a false indication. Oil samples are taken from the sump, which is on the upstream side of the 3-micron filter. When the rotors stop turning, the oil slowly drains and flushes the debris trapped by the filter into the sump.

SH-60B, SH-60F, HH-60H, MH-60R, MH-60S, SH-60R,
YSH-60J, NMH-60R, NSH-60B, HH-60J, MH-60J, MH-60T
(U. S. NAVY AND U. S. COAST GUARD)
MAIN TRANSMISSION

NOTES

Wear particles found in an oil sample will give a false indication. Oil samples are taken from the sump, which is on the upstream side of the 3-micron filter. When the rotors stop turning, the oil slowly drains and flushes the debris trapped by the filter into the sump.

The main transmission consists of a main module, two input modules and two accessory modules. The main transmission has a single lubrication system that lubricates the modules listed above as well as the gearbox driven generators. For the SH-60B, SH-60F, HH-60H, MH-60S, MH-60R (with main module 70351-38100) a 3-micron filter is used which effectively removes particles in the size range measurable by spectrometric analysis. For these aircraft, only aqua-test shall be performed and for all main transmissions, water content limit shall be 1200 PPM (0.120%). For all configurations of main transmissions, water content that exceeds 1500 PPM shall result in a laboratory recommendation “J”: Change oil; sample after first flight. Water content between 1200 and 1500 PPM shall result in a laboratory recommendation “C”: do not change oil; resample after first flight. If resample results in water content still above 1200 PPM, laboratory recommendation shall be “J”: change oil; sample after first flight.

SH-60B, SH-60F, HH-60H, UH-60A, UH-60L, EH-60A,
MH-60L, MH-60K, MH-60R, MH-60S, VH-60N
INTERMEDIATE GEARBOX

JOAP ATOMIC EMISSION ROTRODE

	Fe	Ag	Al	Mg	Ti	Cu	B	Si	Zn
Abnormal Trend (PPM Increase in 10 hrs)	9	3	3	9	3	9			
Normal Range	0-31	0-2	0-2	0-13	0-3	0-11		0-60	
Marginal Range	32-44	3	3	14-24	4	12-21			
High Range	45-50	4	4	25-32	5	22-29			
Abnormal	≥51	≥5	≥5	≥33	≥6	≥30	10		10

WATER LIMIT: 1,200 PPM or 0.120 percent

Elevated boron (B) and/or zinc (Zn) concentrations usually indicate contamination with another oil type, primarily MIL-PRF-2104. Recommend resampling and retesting immediately. If new value exceeds 8.0 PPM, run check with D19-0 to ensure proper instrument function. When proper function is confirmed, report both results and suspected contamination with MIL-PRF-2104 to chain of command, maintenance chief, cognizant engineering authority (Army and Navy only), and other personnel as specified by local written procedures. Recommend flushing and retesting of contaminated pre-oilers, carts, or other reservoirs where contamination is found until both B and Zn concentrations fall below 8.0 PPM. Refer to JOAP Manual Volume II Section IX, page 9-1 for more information. Recommend segregation of confirmed or suspected contaminated stocks, and submit information (batch no., lot no., MIL-PRF, nature of problem, etc.) on such stocks through the Defense supply deficiency reporting system.

The intermediate gearbox has a self-contained splash-lube oil system without an oil filter. Normal wear particles will continue to increase until the gearbox is drained and reserviced in accordance with the general aircraft information manual.

All oil samples shall be checked for water content. Water limit: 1200 PPM or 0.120 percent. Water content that exceeds 1500 PPM shall result in a laboratory recommendation of “J”: change oil; sample after first flight. Water content between 1200 and 1500 PPM shall result in a laboratory recommendation “C”: do not change oil; resample after first flight. If resample results in water content still above 1200 PPM, laboratory recommendation shall be “J”: change oil; sample after first flight. Water in the oil can lead to corrosion which will cause iron and/or

magnesium wear metals to appear in the oil analysis. The following supplementary information describes sources of individual wear metals and recommended maintenance actions depending on contamination level and trend. For the SH-60B, SH-60F, HH-60H, MH-60S, and MH-60R aircraft, contact MMHISST.1 at the Naval Air Depot, Cherry Pt. for further information or clarification. For the UH-60A, UH-60L, EH-60A, MH-60L and MH-60K aircraft, contact AMCOM Engineering, AMSAM-RD-AE-P. For the VH-60N aircraft, contact PMA-274 In-Service Class Desk.

SH-60B, SH-60F, HH-60H, UH-60A, UH-60L, EH-60A, (Cont.)
MH-60L, MH-60K, MH-60R, MH-60S, VH-60N
INTERMEDIATE GEARBOX

NOTES

For SH-60B, SH-60F and HH-60H aircraft, a recommendation for immediate maintenance before further flight may have serious impact and is to be issued only in accordance with the instructions below. Any recommendation involving immediate

maintenance before further flight shall be accompanied by a priority naval message to NAVAVNDEPOT Cherry Point NC, citing BuNo, operating activity, gearbox type, serial number, oil analysis history, and recommendation.

Fe - Iron may indicate wear or corrosion of input pinion gear, output bevel gear, bearings, or liners. If iron level enters marginal or high range, recommendation shall be to "Submit oil samples approximately each 10 flight hours for the next 30 flight hours. Do not change oil at this time. If iron level does not increase to abnormal upward trend occurs, change oil to remove potentially abrasive iron particles and return to normal sampling". If abnormal iron level or abnormal upward trend occurs, recommendation shall be to "Change oil, submit sample after initial turn-up, and submit samples approximately each 10 flight hours for next 30 flight hours. If iron level remains below marginal range and non abnormal upward trend occurs within this 30 hour period, return to normal sampling".
If iron level climbs to marginal range or above or if abnormal upward trend occurs within this period, recommendation shall be to "Perform serviceability check of intermediate gearbox in accordance with aircraft general information manual."

Ag - Primary source of silver in the intermediate gearbox is plating on male splines on the input opinion and output bevel gears. These splines mate with the input and output flange splines. Though not in wetted area of gearbox, wear particles can in some cases migrate through faying surfaces into oil system. Secondary source of silver in intermediate gearbox is plating on inner diameters of input and output flange sleeves. These surfaces are press fit onto flanges and are not subject to normal wear. If silver level enters marginal or high range, recommendation shall be to "Submit oil samples approximately each 10 flight hours for the next 30 flight hours. Do not change oil at this time. If silver level does not increase to abnormal range and no abnormal upward trend occurs within this period, change oil at the end of the 30 hour period and return to normal sampling". If silver level enters abnormal range, or if abnormal upward trend in silver occurs, recommendation shall be to discontinue flight operations and check for proper torque on input and output flange nuts per transmission system maintenance manual. If proper torque is confirmed, recommendation shall be to "Change oil, submit oil sample after initial turn-ups, and submit oil sample approximately each 10 flight hours for the next 30 flight hours. If silver level remains below marginal range and no abnormal upward trend occurs within this 30 flight hour period, return to normal sampling".

SH-60B, SH-60F, HH-60H, UH-60A, UH-60L, EH-60A, (Cont.)
MH-60L, MH-60K, MH-60R, MH-60S, VH-60N
INTERMEDIATE GEARBOX

If silver level returns to marginal range or above or if abnormal upward trend in silver level occurs within this 30 flight hour period, recommendation shall be to "Immediately discontinue further flight operations, remove input and output flanges, and inspect flange splines and gear splines for fretting/wear in accordance with system maintenance manual".

Al - There are two components in the intermediate gearbox that might produce aluminum wear particles under specific wear conditions. Wear/fretting on the input and output flanges can produce aluminum and titanium. A third and fourth component, the input pinion and output bevel gear plugs, are 2024 aluminum, but are not normally subject to service wear. If aluminum level

enters marginal or high range, recommendation shall be to "Submit oil samples approximately each 10 flight hours for the next 30 flight hours. Do not change oil at this time. If contamination does not increase to abnormal range and no abnormal upward trend occurs at any time within this period, change oil and return to normal sampling". If aluminum level enters abnormal range or if abnormal upward trend occurs, recommendation shall be to "Discontinue flight operations and check for proper torque on the input and output flange nuts in accordance with transmission system maintenance manual". If proper torque is confirmed, recommendation shall be to "Change oil and submit oil sample after initial turnup and approximately each 10 flight hour period, return to normal sampling". If aluminum level returns to high or abnormal range, or if abnormal upward trend recurs at any time within this 30 flight hour period, recommendation shall be to immediately discontinue further flight operations, remove input and output flange and inspect flange splines for fretting/wear in accordance with transmission system maintenance manual.

Mg - With a new or freshly reworked gearbox, magnesium usually indicates minor manufacturing/assembly debris from housings. Otherwise, magnesium contamination indicates internal corrosion or abrasive wear. Magnesium components in the intermediate gearbox include the input housing, center housing, output housing, and the lubrication spiral which provides oil to the output bearing on the output bevel gear. Due to moisture accumulation, vulnerability to corrosion is increased if intermediate gearbox has been serviced but has not been operational for an extended period. If corrosion occurs due to moisture contamination, magnesium is sometimes accompanied by iron. If magnesium level enters marginal or high range, recommendation shall be to "Sample at approximately 10 flight hours interval for next 30 flight hours. Do not change oil at this time. If magnesium level does not increase to abnormal range and no abnormal upward trend occurs in this initial 30 flight hour period, return to normal sampling". Maintain normal sampling interval thereafter until abnormal level or abnormal upward trend occurs. Due to relative softness of magnesium alloys in this gearbox, risk of abrasion is not sufficient to justify oil change unless abnormal upward trend occurs or magnesium level enters abnormal range.

SH-60B, SH-60F, HH-60H, UH-60A, UH-60L, EH-60A, (Cont.)
MH-60L, MH-60K, MH-60R, MH-60S, VH-60N
INTERMEDIATE GEARBOX

If magnesium level enters abnormal range or if abnormal upward trend occurs, recommendation shall be to "change oil, submit turn-up sample, and submit samples approximately 10 flight hours for next 30 flight hours. If magnesium level remains below marginal level and no abnormal upward trend occurs within this 30 flight hour period, return to normal sampling." If magnesium level returns to marginal range or above, or if abnormal upward trend occurs, recommendation shall be to "Submit oil samples approximately each 10 flight hours until intermediate gearbox can be removed due to internal corrosion/wear".

Ti - Titanium particles may be indicative of fretting/wear on the input and output flange splines. Aluminum wear particles should accompany the titanium, since there is aluminum in the titanium alloy for both flanges. If titanium level enters marginal or high range, recommendation shall be to "Submit oil samples approximately each 10 flight hours for the next 30 flight hours. Do not change oil at this time. If titanium level does not increase to abnormal range during this period, and no abnormal upward trend occurs, change oil at

the end of the 30 hour period to remove potentially abrasive titanium particles, and return to normal sampling." If titanium level enters abnormal range, or if abnormal upward trend in titanium occurs, recommendation shall be to "Discontinue flight operations and check for proper torque on input and output flange nuts in accordance with transmission system maintenance manual". If proper torque is confirmed, recommendation shall be to "Change oil, submit oil sample after initial turn-up, and submit oil sample approximately each 10 flight hours for the next 30 flight hours. If titanium level remains below marginal range and no abnormal upward trend occurs by the end of this 30 flight hour period, return to normal sampling".

If titanium level returns to marginal range or above, or if abnormal upward trend in titanium level recurs at any time within this 30 flight hour period, recommendation shall be to "Immediately discontinue further flight operations, remove input and output flanges and inspect flange splines and bevel gear splines for fretting/wear in accordance with transmission system maintenance manual".

Cr - Chromium in the intermediate gearbox indicates wear of input and/or output flange sleeves from seal rubbing. Normal service wear on either sleeve is benign and requires no maintenance action until leakage rate exceeds allowable limits.

Cu - Copper is an alternative to silver plating on the splines of the input pinion and output bevel gears. If copper level enters marginal or high range, recommendation shall be to "Submit oil samples approximately each 10 flight hours for the next 30 flight hours. Do not change oil at this time. If copper level does not increase to abnormal range and no abnormal upward trend occurs within this period, change oil at the end of the 30 hour period and return to normal sampling".

SH-60B, SH-60F, HH-60H, UH-60A, UH-60L, EH-60A, (Cont.)
MH-60L, MH-60K, MH-60R, MH-60S, VH-60N
INTERMEDIATE GEARBOX

If copper level enters abnormal range, or if abnormal upward trend in copper occurs, recommendation shall be to discontinue flight operations and check for proper torque on input and output flange nuts in accordance with transmission system maintenance manual". If proper torque is confirmed, recommendation shall be to "Change oil, submit oil sample after initial turn-up, and submit oil sample approximately each 10 flight hours for the next 30 flight hours. If copper level remains below marginal range and no abnormal upward trend occurs within this 30 flight hour period, return to normal sampling". If copper level returns to marginal range or above or if abnormal upward trend in copper level occurs within this 30 flight hour period, recommendation shall be to "Immediately discontinue further flight operations, remove input and output flanges, and inspect flange splines and gear splines for fretting/wear in accordance with transmission system maintenance manual".

Ni - Nickel is a component of steels used in gears, bearings, and sleeves in this gearbox. It is also used as a base plating for the chrome layer used on the input and output flange sleeves. Because plating applications are under 0.005-0.007 inch layer of chrome, wear on nickel plating would be preceded by abnormal levels of chromium. More likely source of nickel is wear or corrosion of a gear, bearing, or sleeve. Because steels will normally produce iron in greater quantity, iron level is used for maintenance decisions on these components (See supplementary information above on iron).

Si - Silicon is not a critical wear metal in the intermediate gearbox, but should be monitored due to the potential for abrasion if levels grow too high. The probable source of silicon is contamination from sand. Oil change shall be recommended for verified silicon level over 60 PPM.

Pb Lead may appear, but does not impact operation of aircraft. Continue to operate aircraft with no corrective action required.

SH-60B, SH-60F, HH-60H, MH-60R,
NSH-60F, NSH-60B, HH-60J, MH-60J, MH-60T
(NAVY AND COAST GUARD)
NTERMEDIATE GEARBOX

JOAP ATOMIC EMISSION ROTRODE

	Fe	Ag	Al	Mg	Ti	Cu	B	Si	Zn
Abnormal Trend (PPM Increase in 10 hrs)	9	3	3	9	3	9			
Normal Range	0-31	0-2	0-2	0-13	0-3	0-11		0-60	
Marginal Range	32-44	3	3	14-24	4	12-21			
High Range	45-50	4	4	25-32	5	22-29			
Abnormal	≥51	≥5	≥5	≥33	≥6	≥30	10		10

WATER LIMIT: 1,200 PPM or 0.120 percent

Elevated boron (B) and/or zinc (Zn) concentrations usually indicate contamination with another oil type, primarily MIL-PRF-2104. Recommend resampling and retesting immediately. If new value exceeds 8.0 PPM, run check with D19-0 to ensure proper instrument function. When proper function is confirmed, report both results and suspected contamination with MIL-PRF-2104 to chain of command, maintenance chief, cognizant engineering authority (Army and Navy only), and other personnel as specified by local written procedures. Recommend flushing and retesting of contaminated pre-oilers, carts, or other reservoirs where contamination is found until both B and Zn concentrations fall below 8.0 PPM. Refer to JOAP Manual Volume II Section IX, page 9-1 for more information. Recommend segregation of confirmed or suspected contaminated stocks, and submit information (batch no., lot no., MIL-PRF, nature of problem, etc.) on such stocks through the Defense supply deficiency reporting system.

The intermediate gearbox has a self-contained splash-lube oil system without an oil filter. Normal wear particles will continue to increase until the gearbox is drained and reserviced in accordance with the general aircraft information manual.

All oil samples shall be checked for water content. Water limit: 1200 PPM or 0.120 percent. Water content that exceeds 1500 PPM shall result in a laboratory recommendation of “J”: change oil; sample after first flight. Water content between 1200 and 1500 PPM shall result in a laboratory recommendation “C”: do not change oil; resample after first flight. If resample results in water content still above 1200 PPM, laboratory recommendation shall be “J”: change oil; sample after first flight. Water in the oil can lead to corrosion which will cause iron and/or magnesium wear metals to appear in the oil analysis. The following supplementary information describes sources of individual wear metals and recommended maintenance actions depending on contamination level and trend..

NOTES

For all Navy/Coast Guard aircraft, a recommendation for immediate maintenance before further flight may have serious impact and is to be issued only in accordance with the instructions below. Any recommendation involving immediate maintenance before further flight shall be accompanied by a priority naval message to citing BuNo, operating activity, gearbox type, serial number, oil analysis history, and recommendation. For Navy models message addressee is NAVAVNDEPOT CHERRY POINT NC. And for Coast Guard models use COGARD AR SC ELIZABETH CITY NC//H60 ENG//.

SH-60B, SH-60F, HH-60H, MH-60R, MH-60R, (Cont.)
NSH-60F, NSH-60B, HH-60J, MH-60J, MH-60T
(NAVY AND COAST GUARD)
NTERMEDIATE GEARBOX

Fe - Iron may indicate wear or corrosion of input pinion gear, output bevel gear, bearings, or liners. If iron level enters marginal or high range, recommendation shall be to "Submit oil samples approximately each 10 flight hours for the next 30 flight hours. Do not change oil at this time. If iron level does not increase to abnormal upward trend occurs, change oil to remove potentially abrasive iron particles and return to normal sampling". If abnormal iron level or abnormal upward trend occurs, recommendation shall be to "Change oil, submit sample after initial turn-up, and submit samples approximately each 10 flight hours for next 30 flight hours. If iron level remains below marginal range and non abnormal upward trend occurs within this 30 hour period, return to normal sampling".
If iron level climbs to marginal range or above or if abnormal upward trend occurs within this period, recommendation shall be to "Perform serviceability check of intermediate gearbox in accordance with aircraft general information manual."

Ag - Primary source of silver in the intermediate gearbox is plating on male splines on the input opinion and output bevel gears. These splines mate with the input and output flange splines. Though not in wetted area of gearbox, wear particles can in some cases migrate through faying surfaces into oil system. Secondary source of silver in intermediate gearbox is plating on inner diameters of input and output flange sleeves. These surfaces are press fit onto flanges and are not subject to normal wear. If silver level enters marginal or high range, recommendation shall be to "Submit oil samples approximately each 10 flight hours for the next 30 flight hours. Do not change oil at this time. If silver level does not increase to abnormal range and no abnormal upward trend occurs within this period, change oil at the end of the 30 hour period and return to normal sampling". If silver level enters abnormal range, or if abnormal upward trend in silver occurs, recommendation shall be to discontinue flight operations and check for proper torque on input and output flange nuts per transmission system maintenance manual. If proper torque is confirmed, recommendation shall be to "Change oil, submit oil sample after initial turn-ups, and submit oil sample approximately each 10 flight hours for the next 30 flight hours. If silver level remains below marginal range and no abnormal upward trend occurs within this 30 flight hour period, return to normal sampling". If silver level returns to marginal range or above or if abnormal upward trend in silver level occurs within this 30 flight hour period, recommendation shall be to "Immediately discontinue further flight operations, remove input and output flanges, and inspect flange splines and gear splines for fretting/wear in accordance with system maintenance manual".

SH-60B, SH-60F, HH-60H, MH-60R, MH-60R, (Cont.)
NSH-60F, NSH-60B, HH-60J, MH-60J, MH-60T
(NAVY AND COAST GUARD)
NTERMEDIATE GEARBOX

Al - There are two components in the intermediate gearbox that might produce aluminum wear particles under specific wear conditions. Wear/fretting on the input and output flanges can produce aluminum and titanium. A third and fourth component, the input pinion and output bevel gear plugs, are 2024 aluminum, but are not normally subject to service wear. If aluminum level enters marginal or high range, recommendation shall be to "Submit oil samples approximately each 10 flight hours for the next 30 flight hours. Do not change oil at this time. If contamination does not increase to abnormal range and no abnormal upward trend occurs at any time within this period, change oil and return to normal sampling". If aluminum level enters abnormal range or if abnormal upward trend occurs, recommendation shall be to "Discontinue flight operations and check for proper torque on the input and output flange nuts in accordance with transmission system maintenance manual". If proper torque is confirmed, recommendation shall be to "Change oil and submit oil sample after initial turnup and approximately each 10 flight hour period, return to normal sampling". If aluminum level returns to high or abnormal range, or if abnormal upward trend recurs at any time within this 30 flight hour period, recommendation shall be to immediately discontinue further flight operations, remove input and output flange and inspect flange splines for fretting/wear in accordance with transmission system maintenance manual.

Mg - With a new or freshly reworked gearbox, magnesium usually indicates minor manufacturing/assembly debris from housings. Otherwise, magnesium contamination indicates internal corrosion or abrasive wear. Magnesium components in the intermediate gearbox include the input housing, center housing, output housing, and the lubrication spiral which provides oil to the output bearing on the output bevel gear. Due to moisture accumulation, vulnerability to corrosion is increased if intermediate gearbox has been serviced but has not been operational for an extended period. If corrosion occurs due to moisture contamination, magnesium is sometimes accompanied by iron. If magnesium level enters marginal or high range, recommendation shall be to "Sample at approximately 10 flight hours interval for next 30 flight hours. Do not change oil at this time. If magnesium level does not increase to abnormal range and no abnormal upward trend occurs in this initial 30 flight hour period, return to normal sampling". Maintain normal sampling interval thereafter until abnormal level or abnormal upward trend occurs. Due to relative softness of magnesium alloys in this gearbox, risk of abrasion is not sufficient to justify oil change unless abnormal upward trend occurs or magnesium level enters abnormal range. If magnesium level enters abnormal range or if abnormal upward trend occurs, recommendation shall be to "change oil, submit turn-up sample, and submit samples approximately 10 flight hours for next 30 flight hours. If magnesium level remains below marginal level and no abnormal upward trend occurs within this 30 flight hour period, return to normal sampling." If magnesium level returns to marginal range or above, or if abnormal upward trend occurs, recommendation shall be to "Submit oil samples approximately each 10 flight hours until intermediate gearbox can be removed due to internal corrosion/wear".

SH-60B, SH-60F, HH-60H, MH-60R, MH-60R, (Cont.)
NSH-60F, NSH-60B, HH-60J, MH-60J, MH-60T
(NAVY AND COAST GUARD)
NTERMEDIATE GEARBOX

Ti - Titanium particles may be indicative of fretting/wear on the input and output flange splines. Aluminum wear particles should accompany the titanium, since there is aluminum in the titanium alloy for both flanges. If titanium level enters marginal or high range, recommendation shall be to "Submit oil samples approximately each 10 flight hours for the next 30 flight hours. Do not change oil at this time. If titanium level does not increase to abnormal range during this period, and no abnormal upward trend occurs, change oil at the end of the 30 hour period to remove potentially abrasive titanium particles, and return to normal sampling." If titanium level enters abnormal range, or if abnormal upward trend in titanium occurs, recommendation shall be to "Discontinue flight operations and check for proper torque on input and output flange nuts in accordance with transmission system maintenance manual". If proper torque is confirmed, recommendation shall be to "Change oil, submit oil sample after initial turn-up, and submit oil sample approximately each 10 flight hours for the next 30 flight hours. If titanium level remains below marginal range and no abnormal upward trend occurs by the end of this 30 flight hour period, return to normal sampling". If titanium level returns to marginal range or above, or if abnormal upward trend in titanium level recurs at any time within this 30 flight hour period, recommendation shall be to "Immediately discontinue further flight operations, remove input and output flanges and inspect flange splines and bevel gear splines for fretting/wear in accordance with transmission system maintenance manual".

Cr - Chromium in the intermediate gearbox indicates wear of input and/or output flange sleeves from seal rubbing. Normal service wear on either sleeve is benign and requires no maintenance action until leakage rate exceeds allowable limits.

Cu - Copper is an alternative to silver plating on the splines of the input pinion and output bevel gears. If copper level enters marginal or high range, recommendation shall be to "Submit oil samples approximately each 10 flight hours for the next 30 flight hours. Do not change oil at this time. If copper level does not increase to abnormal range and no abnormal upward trend occurs within this period, change oil at the end of the 30 hour period and return to normal sampling". If copper level enters abnormal range, or if abnormal upward trend in copper occurs, recommendation shall be to discontinue flight operations and check for proper torque on input and output flange nuts in accordance with transmission system maintenance manual". If proper torque is confirmed, recommendation shall be to "Change oil, submit oil sample after initial turn-up, and submit oil sample approximately each 10 flight hours for the next 30 flight hours. If copper level remains below marginal range and no abnormal upward trend occurs within this 30 flight hour period, return to normal sampling". If copper level returns to marginal range or above or if abnormal upward trend in copper level occurs within this 30 flight hour period, recommendation shall be to "Immediately discontinue further flight operations, remove input and output flanges, and inspect flange splines and gear splines for fretting/wear in accordance with transmission system maintenance manual".

SH-60B, SH-60F, HH-60H, MH-60R, MH-60R, (Cont.)
NSH-60F, NSH-60B, HH-60J, MH-60J, MH-60T
(NAVY AND COAST GUARD)
NTERMEDIATE GEARBOX

Ni - Nickel is a component of steels used in gears, bearings, and sleeves in this gearbox. It is also used as a base plating for the chrome layer used on the input and output flange sleeves. Because plating applications are under 0.005-0.007 inch layer of chrome, wear on nickel plating would be preceded by abnormal levels of chromium. More likely source of nickel is wear or corrosion of a gear, bearing, or sleeve. Because steels will normally produce iron in greater quantity, iron level is used for maintenance decisions on these components (See supplementary information above on iron).

Si - Silicon is not a critical wear metal in the intermediate gearbox, but should be monitored due to the potential for abrasion if levels grow too high. The probable source of silicon is contamination from sand. Oil change shall be recommended for verified silicon level over 60 PPM.

Pb Lead may appear, but does not impact operation of aircraft. Continue to operate aircraft with no corrective action required.

SH-60B, SH-60F, HH-60H, MH-60R MH-60S, (ARMY)
TAIL ROTOR GEARBOX

JOAP ATOMIC EMISSION ROTRODE

	Fe	Ag	Al	Mg	Ti	[1]Cu	B	Si	Zn
Abnormal Trend (PPM Increase in 10 hrs)	9	3		9	3				
Normal Range	0-36	0-2		0-26	0-4	0-75		0-100	
Marginal Range	37-41	3		27-32	5				
High Range	42-45	4		33-40	6				
Abnormal	≥46	≥5		≥41	≥7		10		10

[1]Refer to page A-231 for specific Cu wear metal guidance.
WATER LIMIT: 1000PPM or 0.100% (ARMY)

The tail rotor gearbox has a self-contained splash lube oil system without an oil filter. Normal wear particles and/or corrosion particles will continue to increase until the gearbox is drained and reserviced in accordance with aircraft information manual.

All oil samples shall be checked for water content. Water Limit: 1000PPM or 0.100% (ARMY). Water content that exceeds 1000PPM (ARMY) shall result in a laboratory recommendation of “J”: change oil; sample after first flight. Water content between 1200 and 1500 PPM shall result in a laboratory recommendation “C”: do not change oil; resample after first flight. If resample results in water content still above 1200 PPM, laboratory recommendation shall be “J”: change oil; sample after first flight. Water in the oil can lead to corrosion which will cause iron and/or magnesium wear metals to appear in the oil analysis. Water in the oil can also lead to the formation and accumulation of sludge/deposits in the low areas of the gearbox, resulting from a breakdown of the oil. If sludge or deposits are suspected to contaminate the oil, then remove the tail rotor servo and inspect for sludge deposit accumulation in the gearbox and the I.D. of the pinion. Remove any accumulation with a clean dry low lint cloth. The following supplementary information describes sources of individual wear metals and recommended maintenance actions depending on contamination level and trend. Contact MMHISST.1 at the Naval Air Depot, Cherry Point, NC for further information or clarification.

Elevated boron (B) and/or zinc (Zn) concentrations usually indicate contamination with another oil type, primarily MIL-PRF-2104. Recommend resampling and retesting immediately. If new value exceeds 8.0 PPM, run check with D19-0 to ensure proper instrument function. When proper function is confirmed, report both results and suspected contamination with MIL-PRF-2104 to chain of command, maintenance chief, cognizant engineering authority (Army and Navy only), and other personnel as specified by local written procedures. Recommend flushing and retesting of contaminated pre-oilers, carts, or other reservoirs where contamination is found until both B and Zn concentrations fall below 8.0 PPM. Refer to JOAP Manual Volume II Section IX, page 9-1 for more information. Recommend segregation of confirmed or suspected contaminated stocks, and submit information (batch no., lot no., MIL-PRF, nature of problem, etc.) on such stocks through the Defense supply deficiency reporting system.

SH-60B, SH-60F, HH-60H, MH-60R MH-60S, (ARMY) (Cont.)
TAIL ROTOR GEARBOX

NOTES

Recommendation for immediate maintenance before further flight have serious impact and are to be issued only in accordance with the instructions below. Any recommendations involving immediate maintenance before further flight shall be accompanied by a priority Naval message to NAVAVNDEPOT Cherry Point, NC citing bureau number, operating activity, gearbox type, serial number, NOAP history, and recommendation.

Fe If accompanied by copper, see the supplementary information for copper. By itself, iron may indicate wear or corrosion of the pinion gear, bevel gear, bearings, or liners. If iron level enters the marginal or high range without accompanying copper, the recommendation shall be "Submit oil samples approximately each 10 flight hours for the next 30 flight hours. Do not change oil at this time. If iron level does not increase to abnormal range during this period, and no abnormal upward trend occurs, change oil to remove potentially abrasive iron particles and return to normal sampling.

If an abnormal iron level or abnormal upward trend occurs, without accompanying copper, the recommendation shall be "Change oil, submit sample after initial turn-up, and submit samples approximately each 10 flight hours for next 30 flight hours. If iron level remains below marginal range and no abnormal upward trend occurs within this 30 hour period, return to normal sampling". If the iron level climbs to the marginal range or above or if an abnormal upward trend occurs within this period, the recommendation shall be "Perform serviceability check of tail rotor gearbox in accordance with the general aircraft information manual".

Ag - Primary sources of silver in the tail rotor gearbox are plating on male splines on bevel gear and pinion gear. These splines mate with inboard retention plate splines and input flange splines, respectively. Though not in wetted area of the gearbox, wear particles can, in some cases, migrate through faying surfaces into the oil system. Secondary sources of silver in the tail rotor gearbox are plating on inner diameters of inboard retention plate sleeve and input flange sleeve. These surfaces are press fit onto the retention plate and input flange, respectively, and are not subject to normal wear. If the silver level enters the marginal or high range, the recommendation shall be "Submit oil samples approximately each 10 flight hours for the next 30 flights hours. Do not change oil at this time. If silver level does not increase to abnormal range and no abnormal upward trend occurs within this period, change oil at the end of the 30 hour period and return to normal sampling".

SH-60B, SH-60F, HH-60H, MH-60R MH-60S, (ARMY) (Cont.)
TAIL ROTOR GEARBOX

If silver level enters the abnormal range, or if an abnormal upward trend in the silver level occurs, the recommendation shall be "Discontinue flight operations and check for proper torque on inboard retention plate bolts and on input flange nut in accordance with transmission system maintenance manual". If proper torque is confirmed, the recommendation shall be "Change oil, submit oil sample after initial tuneup, and submit oil sample approximately each 10 flight hours for the next 30 hour period, return to normal sampling". If the silver level returns to the marginal range or above, or if an abnormal upward trend in the silver level occurs within this 30 flight hour period, the recommendation shall be "Immediately discontinue further flight operations, remove inboard retention plate, and inspect retention plate splines, bevel gear splines, and split cones for fretting/wear, in accordance with transmission system maintenance manual. If no discrepancies are identified in this inspector, remove input flange and inspect input flange splines and pinion gear splines for fretting/wear."

Al - Aluminum by itself is not considered a critical wear metal in the H-60. If Titanium is normal, no action is required. Aluminum contamination only would indicate internal corrosion. The three aluminum components that typically give apparent indications of wear resulting from corrosion are the input pinion plug, the filler cap assembly and the chip detector assembly. These components are not normally subject to service wear. Most probable source of corrosion product is the input pinion plug, a low point in the gearbox. Wear/fretting on the inboard retention plate split cones can produce aluminum and copper. If wear/fretting on the split cones is occurring, titanium will begin to show in the oil samples.

Mg - With a new or freshly reworked gearbox, magnesium usually indicates minor manufacturing/assembly debris from housings. Otherwise, magnesium contamination indicates internal corrosion or abrasive wear. Magnesium components in the tail rotor gearbox include the input housing, center housing, output housing, and the lubrication spiral that provides oil to the output bearing on the bevel gear. To date, most internal tail rotor gearbox corrosion has originated at the servo bore area, which is accessible for inspection after removal of the tail rotor servo and pitch change shaft assembly.

Due to moisture accumulation, vulnerability to corrosion is increased if the tail rotor gearbox has been serviced but has not been operational for an extended period. If corrosion occurs due to moisture contamination, magnesium is sometimes accompanied by iron. If the magnesium level enters the marginal or high range, the recommendation shall be "Sample at approximately 10 flight hour interval for next 30 flight hours. Do not change oil at this time. If magnesium level does not increase to abnormal range and no abnormal upward trend occurs in the initial 30 flight hour period, return to normal sampling".

SH-60B, SH-60F, HH-60H, MH-60R MH-60S, (ARMY) (Cont.)
TAIL ROTOR GEARBOX

Maintain a normal sampling interval thereafter until an abnormal level or abnormal upward trend occurs. Due to the relative softness of magnesium alloys in this gearbox, risk of abrasion is not sufficient to justify oil change unless an abnormal upward trend occurs or the magnesium level enters an abnormal range. If the magnesium level enters the abnormal range or if an abnormal upward trend occurs, the recommendation shall be "Change oil, submit turn-up sample, and submit samples approximately each 10 flight hours for next 30 flight hours. If magnesium level remains below marginal level and no abnormal upward trend occurs within this 30 flight hour period, return to normal sampling". If the magnesium level returns to the marginal range or above, or if an abnormal upward trend occurs, the recommendation shall be "Remove tail rotor servo and pitch change shaft assembly at next phase inspection and inspect servo bore area of tail rotor gearbox housing, as well as visible internal areas of tail rotor gearbox, for evidence of corrosion. If corrosion is found, repair in accordance with H-60 aircraft corrosion control manual. If no corrosion is evident, serviceability check is recommended in accordance with general aircraft information manual.

Ti - Titanium wear particles can be extremely serious in this gearbox. Titanium particles may be indicative of wear in the splines between the inboard retention plate and the output bevel gear, or in the splines between the input flange and the pinion gear. Aluminum wear particles should accompany the titanium, since there is aluminum in the titanium alloy for both the inboard retention plate and the input flange. If inboard retention plate spline wear is the cause of wear particles, aluminum and copper will usually be contributed through wear on the aluminum-bronze split cones.

If titanium level enters the marginal or high range and is accompanied by aluminum levels in the same range, the recommendation shall be, "Submit samples approximately every 10 flight hours for the next 30 flight hours. Do not change oil at this time." If contamination does not increase to abnormal range and no abnormal trend occurs at any time within this period, change oil and return to normal sampling. If the titanium level enters the abnormal range or if an abnormal upward trend occurs and is accompanied by aluminum levels in the same range or greater, verify immediately with a second sample.

If verified, recommendation shall be, "Discontinue flight operations and check for proper torque on inboard retention plate bolts and the input flange nut in accordance with the transmission manual". If proper torque is confirmed, the recommendation shall be "Change oil and submit oil sample after initial turn-up and approximately each 10 flight hours for the next 30 flight hours. If titanium level remains below the marginal range, with aluminum levels in the same range, and no abnormal trend occurs during this 30 flight hour period, return to normal sampling". If the titanium level returns to the high or abnormal range, accompanied by aluminum in the same range, or if an abnormal trend occurs at any time within the 30 flight hour period, the recommendation shall be, "Immediately discontinue further flight operations, remove the tail rotor servo and inspect for sludge/deposit accumulation in the gearbox and in the I.D. of the input pinion.

SH-60B, SH-60F, HH-60H, MH-60R MH-60S, (ARMY) (Cont.)
TAIL ROTOR GEARBOX

Remove any accumulation with clean dry low lint cloth. If no discrepancies are identified in this inspection, remove inboard retention plate, inspect the retention plate splines, bevel gear splines and split cone for fretting/wear in accordance withthe transmission system manual. If no discrepancies are identified in this inspection, remove the input flange and inspect the input flange splines and pinion gear splines."

Cr - Chromium in the tail rotor gearbox indicates wear of the input flange sleeve, inboard retention plate sleeve, or pitch change shaft outer diameter. Normal service wear on either the input flange sleeve or inboard retention plate sleeve is benign and requires no maintenance action until leakage rate exceeds allowable limits of the general aircraft information manual. Existing 300 hour scheduled removal and inspection of the pitch change shaft is adequate for monitoring normal wear of the pitch change shaft outer diameter. If the chromium level grows beyond 25 PPM, abnormal wear may exist. The recommendation for chromium above 25 PPM shall be "Remove pitch change shaft assembly at earliest opportunity and inspect for unusual wear on shaft outer diameter."

NOTES

The squadron will submit a baseline sample 9 – 13 hours after installation of new oilite bushing.

The oil may not have been changed when the pitch change shaft with the oilite bushing was installed in the tail rotor gearbox

Cu Copper is not a critical wear metal in the H-60 tail rotor gearbox. Copper usually indicates wear on the pitch change shaft oilite bronze bushing from sliding contact with the inner diameter of the steel output bevel gear. Iron from the bevel gear will often accompany copper. Wear on the oilite bushing is common and is the subject of dimensional inspection during scheduled removals. Wear is typically greater in the first 100 – 200 flight hours on a new bushing installation. Wear is the greatest with a new bushing in a 70358-26600-044 tail rotor gearbox. (The –044 gearbox contains the output bevel gear with shotpeened inner diameter, which has a rougher surface finish, thereby causing greater abrasion on the oilite bushing.)
Because wear is common and regular scheduled inspections gage wear on the oilite bushing, limited maintenance action is recommended for copper or copper/iron contamination in the first 100 hours of service on a new bushing.

The only exception to this is if copper levels exceed 200 PPM and/or copper is accompanied by other critical wear metals. (See Table A-5 for applicable maintenance actions and other critical wear metal criteria.) Between 100 – 200 flight hours, maintenance actions should be limited to oil change if the copper level exceeds 100 PPM, provided other wear metals are not involved. After 200 flight hours, a dimensional inspection of the bushing should be performed only when copper levels exceed 75 PPM for two consecutive monitoring intervals.

SH-60B, SH-60F, HH-60H, MH-60R MH-60S, (ARMY) (Cont.)
TAIL ROTOR GEARBOX

Other sources of copper in the tail rotor gearbox are the aluminum bronze split cones on the inboard retention plate and the cage material on the duplex ball bearing in the tail rotor servo coupling. Split cones can contribute copper and aluminum to the oil if wear/fretting occurs. (See supplementary information for aluminum.) The duplex ball bearing is inside the pitch change shaft and is not normally exposed to oil flow.

Table A-6. Copper levels between 100 and 200 PPM

Hours (since new bushing)	Cu (PPM)	Action
≤ 100	≤ 200	No maintenance required
≤ 100	> 200	Drain, refill. Sample @ 25 hours
>100 & ≤ 200	≤ 100	No maintenance required
>100 & ≤ 200	> 100	Drain, refill @ 200 hrs since new bushing
> 200	≤ 75	No maintenance required
> 200	> 75*	Perform dimensional inspection of bushing

* For two consecutive 60-hour samples

Mo - Molybdenum is not regarded as a critical wear metal in the H-60 tail rotor gearbox. Sources are solid film lube on the inner diameter of the bevel gear or grease used to lubricate the inboard retention plate splines on installation.

Ni - Nickel is not regarded as a critical wear metal in the tail rotor gearbox. Nickel sources are either benign wear or wear that is more accurately signaled by another wear metal. Most likely source of nickel wear is wear on nickel plating on outer diameter of inboard retention plate sleeve. Sleeve provides contact surface for output oil seal and can result in oil leakage if wear becomes excessive. Leakage should be detectable by routine inspection before if exceeds allowable limits.

Other sources of nickel are as follows: Nickel is used as base plating on input flange sleeve inner diameter and pitch change shaft outer diameter. Because this base plating is under 0.005-0.007 inch of chrome plating, abnormal levels of chromium would be evident in the oil samples for some time before wear penetrated to nickel plating. Practically all steel alloys used in tail rotor gearbox components include a small percentage of nickel. This includes gears, bearings, liners, servo fitting and link, bolts, washers and nuts. Because these alloys are all over 90 percent iron, wear on a steel component would produce many times more iron than nickel.

Monel safety wire is used to safety the connecting bolt between connecting link and fitting inside pitch change shaft assembly. This link and fitting, together with duplex ball bearing set, provide the connection between tail rotor servo and pitch change shaft that allows shaft to rotate while simultaneously moving axially with servo inputs. Monel is approximately 60-65 percent nickel and 30 percent copper. Because this safety wire is not normally subject to wear and is not exposed to significant amounts of oil, contribution to NOAP is questionable.

SH-60B, SH-60F, HH-60H, MH-60R MH-60S, (ARMY) (Cont.)
TAIL ROTOR GEARBOX

Si - Silicon is not a critical wear metal in the tail rotor gearbox, but should be monitored due to the potential for abrasion if levels grow too high. The probable sources of silicon are contamination from sand or from leakage of silicon base grease through the pitch change shaft sear. Oil change shall be recommended for verified silicon level over 100 PPM.

SH-60B, SH-60F, HH-60H, MH-60R, MH-60S, SH-60R,
YSH-60J, NMH-60R, NSH-60B, HH-60J, MH-60J, MH-60T
(U. S. NAVY AND U. S. COAST GUARD)
TAIL ROTOR GEARBOX

JOAP ATOMIC EMISSION ROTRODE

	Fe	Ag	Al	Mg	Ti	[1]Cu	B	Si	Zn
Abnormal Trend (PPM Increase in 10 hrs)	9	3		9	3				
Normal Range	0-36	0-2		0-26	0-4	0-75		0-100	
Marginal Range	37-41	3		27-32	5				
High Range	42-45	4		33-40	6				
Abnormal	≥46	≥5		≥41	≥7		10		10

[1]Refer to page A-238 for specific Cu wear metal guidance.
WATER LIMIT: 1,200 PPM or 0.120%

Elevated boron (B) and/or zinc (Zn) concentrations usually indicate contamination with another oil type, primarily MIL-PRF-2104. Recommend resampling and retesting immediately. If new value exceeds 8.0 PPM, run check with D19-0 to ensure proper instrument function. When proper function is confirmed, report both results and suspected contamination with MIL-PRF-2104 to chain of command, maintenance chief, cognizant engineering authority (Army and Navy only), and other personnel as specified by local written procedures. Recommend flushing and retesting of contaminated pre-oilers, carts, or other reservoirs where contamination is found until both B and Zn concentrations fall below 8.0 PPM. Refer to JOAP Manual Volume II Section IX, page 9-1 for more information. Recommend segregation of confirmed or suspected contaminated stocks, and submit information (batch no., lot no., MIL-PRF, nature of problem, etc.) on such stocks through the Defense supply deficiency reporting system.

The tail rotor gearbox has a self-contained splash lube oil system without an oil filter. Normal wear particles and/or corrosion particles will continue to increase until the gearbox is drained and reserviced in accordance with aircraft information manual.

All oil samples shall be checked for water content. Water Limit: 1200 PPM or 0.120 percent. Water content that exceeds 1500 PPM shall result in a laboratory recommendation of “J”: change oil; sample after first flight. Water content between 1200 and 1500 PPM shall result in a laboratory recommendation “C”: do not change oil;

NOTES

Recommendation for immediate maintenance before further flight have serious impact and are to be issued only in accordance with the instructions below. Any recommendations involving immediate maintenance before further flight shall be accompanied by a priority Naval message citing bureau number, operating activity, gearbox type, serial number, NOAP history, and recommendation. Messages on Navy aircraft shall be address to NAVAVNDEPOT Cherry Point, NC

SH-60B, SH-60F, HH-60H, MH-60R, MH-60S, SH-60R, (Cont.)
YSH-60J, NMH-60R, NSH-60B, HH-60J, MH-60J, MH-60T
(U. S. NAVY AND U. S. COAST GUARD)
TAIL ROTOR GEARBOX

Fe - If accompanied by copper, see the supplementary information for copper. By itself, iron may indicate wear or corrosion of the pinion gear, bevel gear, bearings, or liners. If iron level enters the marginal or high range without accompanying copper, the recommendation shall be "Submit oil samples approximately each 10 flight hours for the next 30 flight hours. Do not change oil at this time. If iron level does not increase to abnormal range during this period, and no abnormal upward trend occurs, change oil to remove potentially abrasive iron particles and return to normal sampling. If an abnormal iron level or abnormal upward trend occurs, without accompanying copper, the recommendation shall be "Change oil, submit sample after initial turn-up, and submit samples approximately each 10 flight hours for next 30 flight hours. If iron level remains below marginal range and no abnormal upward trend occurs within this 30 hour period, return to normal sampling". If the iron level climbs to the marginal range or above or if an abnormal upward trend occurs within this period, the recommendation shall be "Perform serviceability check of tail rotor gearbox in accordance with the general aircraft information manual".

Ag - Primary sources of silver in the tail rotor gearbox are plating on male splines on bevel gear and pinion gear. These splines mate with inboard retention plate splines and input flange splines, respectively. Though not in wetted area of the gearbox, wear particles can, in some cases, migrate through faying surfaces into the oil system. Secondary sources of silver in the tail rotor gearbox are plating on inner diameters of inboard retention plate sleeve and input flange sleeve. These surfaces are press fit onto the retention plate and input flange, respectively, and are not subject to normal wear. If the silver level enters the marginal or high range, the recommendation shall be "Submit oil samples approximately each 10 flight hours for the next 30 flights hours. Do not change oil at this time. If silver level does not increase to abnormal range and no abnormal upward trend occurs within this period, change oil at the end of the 30 hour period and return to normal sampling".

SH-60B, SH-60F, HH-60H, MH-60R, MH-60S, SH-60R, (Cont.)
YSH-60J, NMH-60R, NSH-60B, HH-60J, MH-60J, MH-60T
(U. S. NAVY AND U. S. COAST GUARD)
TAIL ROTOR GEARBOX

If silver level enters the abnormal range, or if an abnormal upward trend in the silver level occurs, the recommendation shall be "Discontinue flight operations and check for proper torque on inboard retention plate bolts and on input flange nut in accordance with transmission system maintenance manual". If proper torque is confirmed, the recommendation shall be "Change oil, submit oil sample after initial tuneup, and submit oil sample approximately each 10 flight hours for the next 30 our period, return to normal sampling". If the silver level returns to the marginal range or above, or if an abnormal upward trend in the silver level occurs within this 30 flight hour period, the recommendation shall be "Immediately discontinue further flight operations, remove inboard retention plate, and inspect retention plate splines, bevel gear splines, and split cones for fretting/wear, in accordance with transmission system maintenance manual. If no discrepancies are identified in this inspector, remove input flange and inspect input flange splines and pinion gear splines for fretting/wear."

Al - Aluminum by itself is not considered a critical wear metal in the H-60. If Titanium is normal, no action is required. Aluminum contamination only would indicate internal corrosion. The three aluminum components that typically give apparent indications of wear resulting from corrosion are the input pinion plug, the filler cap assembly and the chip detector assembly. These components are not normally subject to service wear. Most probable source of corrosion product is the input pinion plug, a low point in the gearbox. Wear/fretting on the inboard retention plate split cones can produce aluminum and copper. If wear/fretting on the split cones is occurring, titanium will begin to show in the oil samples.

Mg - With a new or freshly reworked gearbox, magnesium usually indicates minor manufacturing/assembly debris from housings. Otherwise, magnesium contamination indicates internal corrosion or abrasive wear. Magnesium components in the tail rotor gearbox include the input housing, center housing, output housing, and the lubrication spiral that provides oil to the output bearing on the bevel gear. To date, most internal tail rotor gearbox corrosion has originated at the servo bore area, which is accessible for inspection after removal of the tail rotor servo and pitch change shaft assembly. Due to moisture accumulation, vulnerability to corrosion is increased if the tail rotor gearbox has been serviced but has not been operational for an extended period. If corrosion occurs due to moisture contamination, magnesium is sometimes accompanied by iron. If the magnesium level enters the marginal or high range, the recommendation shall be "Sample at approximately 10 flight hour interval for next 30 flight hours. Do not change oil at this time. If magnesium level does not increase to abnormal range and no abnormal upward trend occurs in the initial 30 flight hour period, return to normal sampling". Maintain a normal sampling interval thereafter until an abnormal level or abnormal upward trend occurs. Due to the relative softness of magnesium alloys in this gearbox, risk of abrasion is not sufficient to justify oil change unless an abnormal upward

SH-60B, SH-60F, HH-60H, MH-60R, MH-60S, SH-60R, (Cont.)
YSH-60J, NMH-60R, NSH-60B, HH-60J, MH-60J, MH-60T
(U. S. NAVY AND U. S. COAST GUARD)
TAIL ROTOR GEARBOX

trend occurs or the magnesium level enters an abnormal range. If the magnesium level enters the abnormal range or if an abnormal upward trend occurs, the recommendation shall be "Change oil, submit turn-up sample, and submit samples approximately each 10 flight hours for next 30 flight hours. If magnesium level remains below marginal level and no abnormal upward trend occurs within this 30 flight hour period, return to normal sampling". If the magnesium level returns to the marginal range or above, or if an abnormal upward trend occurs, the recommendation shall be "Remove tail rotor servo and pitch change shaft assembly at next phase inspection and inspect servo bore area of tail rotor gearbox housing, as well as visible internal areas of tail rotor gearbox, for evidence of corrosion. If corrosion is found, repair in accordance with H-60 aircraft corrosion control manual. If no corrosion is evident, serviceability check is recommended in accordance with general aircraft information manual.

Ti - Titanium wear particles can be extremely serious in this gearbox. Titanium particles may be indicative of wear in the splines between the inboard retention plate and the output bevel gear, or in the splines between the input flange and the pinion gear. Aluminum wear particles should accompany the titanium, since there is aluminum in the titanium alloy for both the inboard retention plate and the input flange. If inboard retention plate spline wear is the cause of wear particles, aluminum and copper will usually be contributed through wear on the aluminum-bronze split cones.

If titanium level enters the marginal or high range and is accompanied by aluminum levels in the same range, the recommendation shall be, "Submit samples approximately every 10 flight hours for the next 30 flight hours. Do not change oil at this time." If contamination does not increase to abnormal range and no abnormal trend occurs at any time within this period, change oil and return to normal sampling. If the titanium level enters the abnormal range or if an abnormal upward trend occurs and is accompanied by aluminum levels in the same range or greater, verify immediately with a second sample. If verified, recommendation shall be, "Discontinue flight operations and check for proper torque on inboard retention plate bolts and the input flange nut in accordance with the transmission manual". If proper torque is confirmed, the recommendation shall be "Change oil and submit oil sample after initial turn-up and approximately each 10 flight hours for the next 30 flight hours. If titanium level remains below the marginal range, with aluminum levels in the same range, and no abnormal trend occurs during this 30 flight hour period, return to normal sampling". If the titanium level returns to the high or abnormal range, accompanied by aluminum in the same range, or if an abnormal trend occurs at any time within the 30 flight hour period, the recommendation shall be, "Immediately discontinue further flight operations, remove the tail rotor servo and inspect for sludge/deposit accumulation in the gearbox and in the I.D. of the input pinion. Remove any accumulation with clean dry low lint cloth. If no discrepancies are identified in this inspection, remove inboard retention plate, inspect the retention plate splines, bevel gear splines and split cone for fretting/wear in accordance with the transmission system manual. If no discrepancies are identified in this inspection, remove the input flange and inspect the input flange splines and pinion gear splines."

SH-60B, SH-60F, HH-60H, MH-60R, MH-60S, SH-60R, (Cont.)
YSH-60J, NMH-60R, NSH-60B, HH-60J, MH-60J, MH-60T
(U. S. NAVY AND U. S. COAST GUARD)
TAIL ROTOR GEARBOX

Cr - Chromium in the tail rotor gearbox indicates wear of the input flange sleeve, inboard retention plate sleeve, or pitch change shaft outer diameter. Normal service wear on either the input flange sleeve or inboard retention plate sleeve is benign and requires no maintenance action until leakage rate exceeds allowable limits of the general aircraft information manual. Existing 300 hour scheduled removal and inspection of the pitch change shaft is adequate for monitoring normal wear of the pitch change shaft outer diameter. If the chromium level grows beyond 25 PPM, abnormal wear may exist. The recommendation for chromium above 25 PPM shall be "Remove pitch change shaft assembly at earliest opportunity and inspect for unusual wear on shaft outer diameter."

NOTES

The squadron will submit a baseline sample 9 – 13 hours after installation of new oilite bushing.

The oil may not have been changed when the pitch change shaft with the oilite bushing was installed in the tail rotor gearbox

Cu Copper is not a critical wear metal in the H-60 tail rotor gearbox. Copper usually indicates wear on the pitch change shaft oilite bronze bushing from sliding contact with the inner diameter of the steel output bevel gear. Iron from the bevel gear will often accompany copper. Wear on the oilite bushing is common and is the subject of dimensional inspection during scheduled removals. Wear is typically greater in the first 100 – 200 flight hours on a new bushing installation. Wear is the greatest with a new bushing in a 70358-26600-044 tail rotor gearbox. (The –044 gearbox contains the output bevel gear with shotpeened inner diameter, which has a rougher surface finish, thereby causing greater abrasion on the oilite bushing.)
Because wear is common and regular scheduled inspections gage wear on the oilite bushing, limited maintenance action is recommended for copper or copper/iron contamination in the first 100 hours of service on a new bushing.

The only exception to this is if copper levels exceed 200 PPM and/or copper is accompanied by other critical wear metals. (See Table A-5 for applicable maintenance actions and other critical wear metal criteria.) Between 100 – 200 flight hours, maintenance actions should be limited to oil change if the copper level exceeds 100 PPM, provided other wear metals are not involved. After 200 flight hours, a dimensional inspection of the bushing should be performed only when copper levels exceed 75 PPM for two consecutive monitoring intervals. Other sources of copper in the tail rotor gearbox are the aluminum bronze split cones on the inboard retention plate and the cage material on the duplex ball bearing in the tail rotor servo coupling. Split cones can contribute copper and aluminum to the oil if wear/fretting occurs. (See supplementary information for aluminum.) The duplex ball bearing is inside the pitch change shaft and is not normally exposed to oil flow.

SH-60B, SH-60F, HH-60H, MH-60R, MH-60S, SH-60R, (Cont.)
YSH-60J, NMH-60R, NSH-60B, HH-60J, MH-60J, MH-60T
(U. S. NAVY AND U. S. COAST GUARD)
TAIL ROTOR GEARBOX

Table A-7. Copper levels between 100 and 200 PPM

Hours (since new bushing)	Cu (PPM)	Action
≤ 100	≤ 200	No maintenance required
≤ 100	> 200	Drain, refill. Sample @ 25 hours
>100 & ≤ 200	≤ 100	No maintenance required
>100 & ≤ 200	> 100	Drain, refill @ 200 hrs since new bushing
> 200	≤ 75	No maintenance required
> 200	> 75*	Perform dimensional inspection of bushing

* for two consecutive 60-hour samples

Mo - Molybdenum is not regarded as a critical wear metal in the H-60 tail rotor gearbox. Sources are solid film lube on the inner diameter of the bevel gear or grease used to lubricate the inboard retention plate splines on installation.

Ni - Nickel is not regarded as a critical wear metal in the tail rotor gearbox. Nickel sources are either benign wear or wear that is more accurately signaled by another wear metal. Most likely source of nickel wear is wear on nickel plating on outer diameter of inboard retention plate sleeve. Sleeve provides contact surface for output oil seal and can result in oil leakage if wear becomes excessive. Leakage should be detectable by routine inspection before if exceeds allowable limits.

Other sources of nickel are as follows:
Nickel is used as base plating on input flange sleeve inner diameter and pitch change shaft outer diameter. Because this base plating is under 0.005-0.007 inch of chrome plating, abnormal levels of chromium would be evident in the oil samples for some time before wear penetrated to nickel plating. Practically all steel alloys used in tail rotor gearbox components include a small percentage of nickel. This includes gears, bearings, liners, servo fitting and link, bolts, washers and nuts. Because these alloys are all over 90 percent iron, wear on a steel component would produce many times more iron than nickel.

Monel safety wire is used to safety the connecting bolt between connecting link and fitting inside pitch change shaft assembly. This link and fitting, together with duplex ball bearing set, provide the connection between tail rotor servo and pitch change shaft that allows shaft to rotate while simultaneously moving axially with servo inputs. Monel is approximately 60-65 percent nickel and 30 percent copper. Because this safety wire is not normally subject to wear and is not exposed to significant amounts of oil, contribution to NOAP is questionable.

Si Silicon is not a critical wear metal in the tail rotor gearbox, but should be monitored due to the potential for abrasion if levels grow too high. The probable sources of silicon are contamination from sand or from leakage of silicon base grease through the pitch change shaft sear. Oil change shall be recommended for verified silicon level over 100 PPM.

HH-65A
MAIN GEARBOX

JOAP ATOMIC EMISSION ROTRODE

	Fe	Ag	Al	Cr	Cu	Mg	B	Si	Zn
Abnormal Trend (PPM Increase in 10 hrs)									
Normal Range	0-24				0-59	0-24			
Marginal Range	25-32				60-74	25-32			
High Range	33-39				75-89	33-39			
Abnormal	≥40				≥90	≥40	10	10	10

Water Limit: 0.100% or 1,000 PPM and critical wear metals in marginal or above range

Elevated boron (B) and/or zinc (Zn) concentrations usually indicate contamination with another oil type, primarily MIL-PRF-2104. Recommend resampling and retesting immediately. If new value exceeds 8.0 PPM, run check with D19-0 to ensure proper instrument function. When proper function is confirmed, report both results and suspected contamination with MIL-PRF-2104 to chain of command, maintenance chief, cognizant engineering authority (Army and Navy only), and other personnel as specified by local written procedures. Recommend flushing and retesting of contaminated pre-oilers, carts, or other reservoirs where contamination is found until both B and Zn concentrations fall below 8.0 PPM. Refer to JOAP Manual Volume II Section IX, page 9-1 for more information. Recommend segregation of confirmed or suspected contaminated stocks, and submit information (batch no., lot no., MIL-PRF, nature of problem, etc.) on such stocks through the Defense supply deficiency reporting system.

Elevated silicon (Si) concentration usually indicates contamination with soil, sand, or dust. If aluminum (Al) is also elevated, this suggests the presence of clay or soil. Recommend resampling and retesting immediately. If new value exceeds 8.0 PPM, run check with D19-0 to ensure proper instrument function. When proper function is confirmed, report both results and suspected contamination with soil, sand, or dust to chain of command, maintenance chief, cognizant engineering authority (Army and Navy only), and other personnel as specified by local written procedures. Recommend flushing and retesting of contaminated pre-oilers, carts, or other reservoirs where contamination is found until silicon concentration falls below 8.0 PPM. Refer to JOAP Manual Volume II Section IX, page 9-1 for more information. Recommend segregation of confirmed or suspected contaminated stocks, and submit information (batch no., lot no., MIL-PRF, nature of problem, etc.) on such stocks through the Defense supply deficiency reporting system.

HH-65A
TAIL ROTOR GEARBOX

JOAP ATOMIC EMISSION ROTRODE

	Fe	Ag	Al	Cr	Cu	Mg	B	Si	Zn
Abnormal Trend (PPM Increase in 10 hrs)									
Normal Range	0-79				0-59	0-24			
Marginal Range	80-89				60-74	25-32			
High Range	90-99				75-89	33-39			
Abnormal	≥100				≥90	≥40	10	10	10

Water Limit: 0.100% or 1,000 PPM and critical wear metals in marginal or above range

Elevated boron (B) and/or zinc (Zn) concentrations usually indicate contamination with another oil type, primarily MIL-PRF-2104. Recommend resampling and retesting immediately. If new value exceeds 8.0 PPM, run check with D19-0 to ensure proper instrument function. When proper function is confirmed, report both results and suspected contamination with MIL-PRF-2104 to chain of command, maintenance chief, cognizant engineering authority (Army and Navy only), and other personnel as specified by local written procedures. Recommend flushing and retesting of contaminated pre-oilers, carts, or other reservoirs where contamination is found until both B and Zn concentrations fall below 8.0 PPM. Refer to JOAP Manual Volume II Section IX, page 9-1 for more information. Recommend segregation of confirmed or suspected contaminated stocks, and submit information (batch no., lot no., MIL-PRF, nature of problem, etc.) on such stocks through the Defense supply deficiency reporting system.

Elevated silicon (Si) concentration usually indicates contamination with soil, sand, or dust. If aluminum (Al) is also elevated, this suggests the presence of clay or soil. Recommend resampling and retesting immediately. If new value exceeds 8.0 PPM, run check with D19-0 to ensure proper instrument function. When proper function is confirmed, report both results and suspected contamination with soil, sand, or dust to chain of command, maintenance chief, cognizant engineering authority (Army and Navy only), and other personnel as specified by local written procedures. Recommend flushing and retesting of contaminated pre-oilers, carts, or other reservoirs where contamination is found until silicon concentration falls below 8.0 PPM. Refer to JOAP Manual Volume II Section IX, page 9-1 for more information. Recommend segregation of confirmed or suspected contaminated stocks, and submit information (batch no., lot no., MIL-PRF, nature of problem, etc.) on such stocks through the Defense supply deficiency reporting system.

T-38 (NAVY)
GEARBOX

JOAP ATOMIC EMISSION ROTRODE

	Fe	Ag	Al	Cr	Cu	Mg	B	Si	Zn
Abnormal Trend (PPM Increase in 10 hrs)	18		4	4	9				
Normal Range	0-58		0-15	0-11	0-28				
Marginal Range	59-70		16-18	12-13	29-34				
High Range	71-86		19-23	14-16	35-42				
Abnormal	≥87		≥24	≥17	≥43		10	10	10

Elevated boron (B) and/or zinc (Zn) concentrations usually indicate contamination with another oil type, primarily MIL-PRF-2104. Recommend resampling and retesting immediately. If new value exceeds 8.0 PPM, run check with D19-0 to ensure proper instrument function. When proper function is confirmed, report both results and suspected contamination with MIL-PRF-2104 to chain of command, maintenance chief, cognizant engineering authority (Army and Navy only), and other personnel as specified by local written procedures. Recommend flushing and retesting of contaminated pre-oilers, carts, or other reservoirs where contamination is found until both B and Zn concentrations fall below 8.0 PPM. Refer to JOAP Manual Volume II Section IX, page 9-1 for more information. Recommend segregation of confirmed or suspected contaminated stocks, and submit information (batch no., lot no., MIL-PRF, nature of problem, etc.) on such stocks through the Defense supply deficiency reporting system.

Elevated silicon (Si) concentration usually indicates contamination with soil, sand, or dust. If aluminum (Al) is also elevated, this suggests the presence of clay or soil. Recommend resampling and retesting immediately. If new value exceeds 8.0 PPM, run check with D19-0 to ensure proper instrument function. When proper function is confirmed, report both results and suspected contamination with soil, sand, or dust to chain of command, maintenance chief, cognizant engineering authority (Army and Navy only), and other personnel as specified by local written procedures. Recommend flushing and retesting of contaminated pre-oilers, carts, or other reservoirs where contamination is found until silicon concentration falls below 8.0 PPM. Refer to JOAP Manual Volume II Section IX, page 9-1 for more information. Recommend segregation of confirmed or suspected contaminated stocks, and submit information (batch no., lot no., MIL-PRF, nature of problem, etc.) on such stocks through the Defense supply deficiency reporting system.

PTG14/30/31 (NASA)
GEARBOX

JOAP ATOMIC EMISSION ROTRODE

	Fe	Ag	Al	Cr	Cu	Mg	B	Si	Zn
Abnormal Trend (PPM Increase in 10 hrs)	12		4	4	3	4			
Normal Range	0-40		0-11	0-11	0-8	0-10			
Marginal Range	41-50		12-13	12-13	9	11-12			
High Range	51-59		14-16	14-16	10-11	13-14			
Abnormal	≥60		≥17	≥17	≥12	≥15	10	10	10

Elevated boron (B) and/or zinc (Zn) concentrations usually indicate contamination with another oil type, primarily MIL-PRF-2104. Recommend resampling and retesting immediately. If new value exceeds 8.0 PPM, run check with D19-0 to ensure proper instrument function. When proper function is confirmed, report both results and suspected contamination with MIL-PRF-2104 to chain of command, maintenance chief, cognizant engineering authority (Army and Navy only), and other personnel as specified by local written procedures. Recommend flushing and retesting of contaminated pre-oilers, carts, or other reservoirs where contamination is found until both B and Zn concentrations fall below 8.0 PPM. Refer to JOAP Manual Volume II Section IX, page 9-1 for more information. Recommend segregation of confirmed or suspected contaminated stocks, and submit information (batch no., lot no., MIL-PRF, nature of problem, etc.) on such stocks through the Defense supply deficiency reporting system.

Elevated silicon (Si) concentration usually indicates contamination with soil, sand, or dust. If aluminum (Al) is also elevated, this suggests the presence of clay or soil. Recommend resampling and retesting immediately. If new value exceeds 8.0 PPM, run check with D19-0 to ensure proper instrument function. When proper function is confirmed, report both results and suspected contamination with soil, sand, or dust to chain of command, maintenance chief, cognizant engineering authority (Army and Navy only), and other personnel as specified by local written procedures. Recommend flushing and retesting of contaminated pre-oilers, carts, or other reservoirs where contamination is found until silicon concentration falls below 8.0 PPM. Refer to JOAP Manual Volume II Section IX, page 9-1 for more information. Recommend segregation of confirmed or suspected contaminated stocks, and submit information (batch no., lot no., MIL-PRF, nature of problem, etc.) on such stocks through the Defense supply deficiency reporting system.

MV-22, CV-22
GEARBOX SYSTEMS

The MV-22 and CV-22 gearbox systems are comprised of one mid-wing gearbox (MWGB), two prop-rotor gearboxes (PRGB), two tilt-axis gearboxes and the emergency reservoir system (ELS). These systems use a fine filtration system of 3 and 40 micron filters, with desiccate filters to remove moisture from the air. Based on the filtration design, RCM analysis and recommendation from oil analysis experts in NAVAIR 4.4, JOAP analysis has been determined to be an ineffective preventive maintenance task for the drive system.

The current filtration consists of a manifold assembly, filter bowl assembly, primary filter element assembly and secondary filter element assembly. The oil enters the filter assembly from the oil coolers at an unregulated pressure of 93 to 170 PSIG. Pressure regulated and filtered oil is delivered through the filter, which acts to remove air and debris scavenged from the PRGB cavities before returning to the reservoir. This design effectively cleanses the V-22 drive system gearbox lubricants during normal operations.

Should the drive system lubricants absorb moisture from high humidity atmospheric conditions, water accumulation is evident when the desiccant filter has discolored and changed from the normal blue color. Under these conditions only, oil samples shall be taken and analysed for water content. Water limits are 1000 PPM or 0.100 percent. If water content exceeds the allowed limits, (1) the drive system oil shall be drained and the system re-serviced and (2) the desiccant filter must be changed. Refer to the applicable V-22 IETMS for more details on these maintenance requirements.

VH-60N
MAIN TRANSMISSION

VH-60N main transmission consists of a main module, two input modules and two accessory modules. The main transmission has a single lubrication system that lubricates the modules listed above as well as the gearbox driven generators.

For the VH-60N (with main module 70351-84100), a 3-micron filter is used which effectively removes particles in the size range measurable by spectrometric analysis.
For these aircraft, only aqua-test shall be performed and for all main transmissions, water content limit shall be 1200 PPM (0.120%). For all configurations of main transmissions, water content that exceeds 1500 PPM shall result in a laboratory recommendation “J”: Change oil; sample after first flight. Water content between 1200 and 1500 PPM shall result in a laboratory recommendation “C”: do not change oil; resample after first flight. If resample results in water content still above 1200 PPM, laboratory recommendation shall be “J”: change oil; sample after first flight. For further information or clarification contact PMA-274 VH In-Service Class Desk at DSN 757-5475.

NOTES

Wear particles found in an oil sample will give a false indication. Oil samples are taken from the sump, which is on the upstream side of the 3-micron filter. When the rotors stop turning, the oil slowly drains and flushes the debris trapped by the filter into the sump.

VH-60N
INTERMEDIATE GEARBOX

JOAP ATOMIC EMISSION ROTRODE

	Fe	Ag	Al	Mg	Ti	Cu	B	Si	Zn
Abnormal Trend (PPM Increase in 10 hrs)	9	3	3	9	3	9			
Normal Range	0-31	0-2	0-2	0-13	0-3	0-11		0-60	
Marginal Range	32-44	3	3	14-24	4	12-21			
High Range	45-50	4	4	25-32	5	22-29			
Abnormal	≥51	≥	≥5	≥33	≥6	≥30	10		10

WATER LIMIT: 1,200 PPM or 0.120 percent

Elevated boron (B) and/or zinc (Zn) concentrations usually indicate contamination with another oil type, primarily MIL-PRF-2104. Recommend resampling and retesting immediately. If new value exceeds 8.0 PPM, run check with D19-0 to ensure proper instrument function. When proper function is confirmed, report both results and suspected contamination with MIL-PRF-2104 to chain of command, maintenance chief, cognizant engineering authority (Army and Navy only), and other personnel as specified by local written procedures. Recommend flushing and retesting of contaminated pre-oilers, carts, or other reservoirs where contamination is found until both B and Zn concentrations fall below 8.0 PPM. Refer to JOAP Manual Volume II Section IX, page 9-1 for more information. Recommend segregation of confirmed or suspected contaminated stocks, and submit information (batch no., lot no., MIL-PRF, nature of problem, etc.) on such stocks through the Defense supply deficiency reporting system.

The intermediate gearbox has a self-contained splash-lube oil system without an oil filter. Normal wear particles will continue to increase until the gearbox is drained and reserviced in accordance with the general aircraft information manual.

All oil samples shall be checked for water content. Water limit: 1200 PPM or 0.120 percent. Water content that exceeds 1500 PPM shall result in a laboratory recommendation of “J”: change oil; sample after first flight. Water content between 1200 and 1500 PPM shall result in a laboratory recommendation “C”: do not change oil; resample after first flight. If resample results in water content still above 1200 PPM, laboratory recommendation shall be “J”: change oil; sample after first flight. Water in the oil can lead to corrosion which will cause iron and/or magnesium wear metals to appear in the oil analysis. The following supplementary information describes sources of individual wear metals and recommended maintenance actions depending on contamination level and trend. For further information or clarification. contact PMA-274 VH In-Service Class Desk at DSN 757-5475.

Fe Iron may indicate wear or corrosion of input pinion gear, output bevel gear, bearings, or liners. If iron level enters marginal or high range, recommendation shall be to "Submit oil samples approximately each 10 flight hours for the next 30 flight hours. Do not change oil at this time. If iron level does not increase to abnormal upward trend occurs, change oil to remove potentially abrasive iron particles and return to normal sampling". If abnormal iron level or abnormal upward trend occurs, recommendation shall be to "Change oil, submit sample after initial turn-up, and submit samples approximately each 10 flight hours for next 30 flight hours. If iron level remains below marginal range and non abnormal upward trend occurs within this 30 hour period, return to normal sampling".

VH-60N (Cont.)
INTERMEDIATE GEARBOX

If iron level climbs to marginal range or above or if abnormal upward trend occurs within this period, recommendation shall be to "Perform serviceability check of intermediate gearbox in accordance with aircraft general information manual.

Ag Primary source of silver in the intermediate gearbox is plating on male splines on the input opinion and output bevel gears. These splines mate with the input and output flange splines. Though not in wetted area of gearbox, wear particles can in some cases migrate through faying surfaces into oil system. Secondary source of silver in intermediate gearbox is plating on inner diameters of input and output flange sleeves. These surfaces are press fit onto flanges and are not subject to normal wear. If silver level enters marginal or high range, recommendation shall be to "Submit oil samples approximately each 10 flight hours for the next 30 flight hours. Do not change oil at this time. If silver level does not increase to abnormal range and no abnormal upward trend occurs within this period, change oil at the end of the 30 hour period and return to normal sampling". If silver level enters abnormal range, or if abnormal upward trend in silver occurs, recommendation shall be to discontinue flight operations and check for proper torque on input and output flange nuts per transmission system maintenance manual. If proper torque is confirmed, recommendation shall be to "Change oil, submit oil sample after initial turn-ups, and submit oil sample approximately each 10 flight hours for the next 30 flight hours. If silver level remains below marginal range and no abnormal upward trend occurs within this 30 flight hour period, return to normal sampling". If silver level returns to marginal range or above or if abnormal upward trend in silver level occurs within this 30 flight hour period, recommendation shall be to "Immediately discontinue further flight operations, remove input and output flanges, and inspect flange splines and gear splines for fretting/wear in accordance with system maintenance manual".

Al There are two components in the intermediate gearbox that might produce aluminum wear particles under specific wear conditions. Wear/fretting on the input and output flanges can produce aluminum and titanium. A third and fourth component, the input pinion and output bevel gear plugs, are 2024 aluminum, but are not normally subject to service wear. If aluminum level enters marginal or high range, recommendation shall be to "Submit oil samples approximately each 10 flight hours for the next 30 flight hours. Do not change oil at this time. If contamination does not increase to abnormal range and no abnormal upward trend occurs at any time within this period, change oil and return to normal sampling". If aluminum level enters abnormal range or if abnormal upward trend occurs, recommendation shall be to "Discontinue flight operations and check for proper torque on the input and output flange nuts in accordance with transmission system maintenance manual". If proper torque is confirmed, recommendation shall be to "Change oil and submit oil sample after initial turnup and approximately each 10 flight hour period, return to normal sampling". If aluminum level returns to high or abnormal range, or if abnormal upward trend recurs at any time within this 30 flight hour period, recommendation shall be to immediately discontinue further flight operations, remove input and output flange and inspect flange splines for fretting/wear in accordance with transmission system maintenance manual.

Mg With a new or freshly reworked gearbox, magnesium usually indicates minor manufacturing/assembly debris from housings. Otherwise, magnesium contamination indicates internal corrosion or abrasive wear. Magnesium components in the intermediate gearbox include the input housing, center housing, output housing, and the lubrication spiral which provides oil to the output bearing on the output bevel gear. Due to moisture accumulation, vulnerability to corrosion is increased if intermediate gearbox has been serviced but has not been operational for an extended period. If corrosion occurs due to moisture contamination, magnesium is sometimes accompanied by iron. If magnesium level enters marginal or high range, recommendation shall be to "Sample at approximately 10 flight hours interval for next 30 flight hours. Do not change oil at this time. If magnesium level does not increase to abnormal range and no abnormal upward trend occurs in this initial 30 flight hour period, return to normal sampling". Maintain normal sampling interval thereafter until abnormal level or abnormal upward trend occurs. Due to relative softness of magnesium alloys in this gearbox, risk of abrasion is not sufficient to justify oil change unless abnormal upward trend occurs or magnesium level enters abnormal range. If magnesium level enters abnormal range or if abnormal upward trend occurs, recommendation shall be to "change oil, submit turn-up sample, and submit samples

VH-60N (Cont.)
INTERMEDIATE GEARBOX

approximately 10 flight hours for next 30 flight hours. If magnesium level remains below marginal level and no abnormal upward trend occurs within this 30 flight hour period, return to normal sampling." If magnesium level returns to marginal range or above, or if abnormal upward trend occurs, recommendation shall be to "Submit oil samples approximately each 10 flight hours until intermediate gearbox can be removed due to internal corrosion/wear".

Ti Titanium particles may be indicative of fretting/wear on the input and output flange splines. Aluminum wear particles should accompany the titanium, since there is aluminum in the titanium alloy for both flanges. If titanium level enters marginal or high range, recommendation shall be to "Submit oil samples approximately each 10 flight hours for the next 30 flight hours. Do not change oil at this time. If titanium level does not increase to abnormal range during this period, and no abnormal upward trend occurs, change oil at the end of the 30 hour period to remove potentially abrasive titanium particles, and return to normal sampling." If titanium level enters abnormal range, or if abnormal upward trend in titanium occurs, recommendation shall be to "Discontinue flight operations and check for proper torque on input and output flange nuts in accordance with transmission system maintenance manual". If proper torque is confirmed, recommendation shall be to "Change oil, submit oil sample after initial turn-up, and submit oil sample approximately each 10 flight hours for the next 30 flight hours. If titanium level remains below marginal range and no abnormal upward trend occurs by the end of this 30 flight hour period, return to normal sampling". If titanium level returns to marginal range or above, or if abnormal upward trend in titanium level recurs at any time within this 30 flight hour period, recommendation shall be to "Immediately discontinue further flight operations, remove input and output flanges and inspect flange splines and bevel gear splines for fretting/wear in accordance with transmission system maintenance manual".

Cr Chromium in the intermediate gearbox indicates wear of input and/or output flange sleeves from seal rubbing. Normal service wear on either sleeve is benign and requires no maintenance action until leakage rate exceeds allowable limits.

Cu Copper is an alternative to silver plating on the splines of the input pinion and output bevel gears. If copper level enters marginal or high range, recommendation shall be to "Submit oil samples approximately each 10 flight hours for the next 30 flight hours. Do not change oil at this time. If copper level does not increase to abnormal range and no abnormal upward trend occurs within this period, change oil at the end of the 30 hour period and return to normal sampling". If copper level enters abnormal range, or if abnormal upward trend in copper occurs, recommendation shall be to discontinue flight operations and check for proper torque on input and output flange nuts in accordance with transmission system maintenance manual". If proper torque is confirmed, recommendation shall be to "Change oil, submit oil sample after initial turn-up, and submit oil sample approximately each 10 flight hours for the next 30 flight hours.

If copper level remains below marginal range and no abnormal upward trend occurs within this 30 flight hour period, return to normal sampling". If copper level returns to marginal range or above or if abnormal upward trend in copper level occurs within this 30 flight hour period, recommendation shall be to "Immediately discontinue further flight operations, remove input and output flanges, and inspect flange splines and gear splines for fretting/wear in accordance with transmission system maintenance manual".

Ni Nickel is a component of steels used in gears, bearings, and sleeves in this gearbox. It is also used as a base plating for the chrome layer used on the input and output flange sleeves. Because plating applications are under 0.005-0.007 inch layer of chrome, wear on nickel plating would be preceded by abnormal levels of chromium. More likely source of nickel is wear or corrosion of a gear, bearing, or sleeve. Because steels will normally produce iron in greater quantity, iron level is used for maintenance decisions on these components (See supplementary information above on iron).

VH-60N (Cont.)
INTERMEDIATE GEARBOX

Si Silicon is not a critical wear metal in the intermediate gearbox, but should be monitored due to the potential for abrasion if levels grow too high. The probable source of silicon is contamination from sand. Oil change shall be recommended for verified silicon level over 60 PPM.

Pb Lead may appear, but does not impact operation of aircraft. Continue to operate aircraft with no corrective action required.

VH-60N
TAIL GEARBOX

JOAP ATOMIC EMISSION ROTRODE

	Fe	[2]Al	[2]Cu	Ag	Mg	Ti	B	[3]Si	Zn
[1]Abnormal Trend (PPM Increase in 10 hrs)*	9			3	9	3			
Normal Range	0-36			0-2	0-26	0-4		0-100	
Marginal Range	37-41			3	27-32	5			
High Range	42-45			4	33-40	6			
Abnormal	≥46 [4]			>5	>41	≥7	10		10

[1] If the calculated PPM trend value is equal to or greater than the trend PPM value limit, the transmission has an abnormal trend.
[2] For use of Al and Cu wear metal concentrations, see paragraphs 5b and 5e respectively.
[3] Si < 100 PPM.
[4] Trend may be higher for new, overhauled, or DLI gearboxes (see para. 6a).
Water limit: 1200 PPM (0.120%)

Elevated boron (B) and/or zinc (Zn) concentrations usually indicate contamination with another oil type, primarily MIL-PRF-2104. Recommend resampling and retesting immediately. If new value exceeds 8.0 PPM, run check with D19-0 to ensure proper instrument function. When proper function is confirmed, report both results and suspected contamination with MIL-PRF-2104 to chain of command, maintenance chief, cognizant engineering authority (Army and Navy only), and other personnel as specified by local written procedures. Recommend flushing and retesting of contaminated pre-oilers, carts, or other reservoirs where contamination is found until both B and Zn concentrations fall below 8.0 PPM. Refer to JOAP Manual Volume II Section IX, page 9-1 for more information. Recommend segregation of confirmed or suspected contaminated stocks, and submit information (batch no., lot no., MIL-PRF, nature of problem, etc.) on such stocks through the Defense supply deficiency reporting system.

NOTES

The following information is provided to assist oil analysis laboratory personnel in determining tail rotor gearbox condition based upon an analysis of the gearbox lubricant. The following information does not cover every possible wear mode or operational characteristic. The information is intended to assist the lab personnel in making a determination of the health of the gearbox. If a situation exists that is not covered by the following information, or if additional information or clarification of existing information is desired, contact PMA-274 VH In-Service Class Desk, at DSN 757-5475.

1. The VH-60N tail rotor gearbox changes the speed and angle of drive from the tail drive shaft to the tail rotor blades and pitch control mechanism. See Figure A-1. The major components of the tail rotor gearbox include the housings (input, center, and output), the input bevel pinion and the output bevel gear, four (4) tapered roller bearings, an input flange, an inboard retention plate, and input and output seals. See Figure A-2 for the location of the major components. The tail rotor gearbox is operated with the tail rotor servo and pitch control shaft installed into the gearbox. See Figure A-3.

VH-60N (Cont.)
TAIL GEARBOX

2. The tail rotor gearbox utilized a self-contained splash-type lube system without an oil filter. Normal wear particles will increase in number until the gearbox is drained and flushed. Either DOD-L-85734, MIL-L-23699, or MIL-L-7808 lubricant is used in the gearbox. The gearbox contains approximately 2.75 pints of lubricant. The gearbox lubricant is replaced every B and D Phase IAW A1-H60VA-MRC-400.

a. MIL-L-23699 is one of the most common lubricant in use. It is being replaced by the DOD-L-85734 lubricant, which is now the primary lubricant. DOD-L-85734 lubricant is similar to MIL-L-23699 (e.g., it has the same viscosity), but has the addition of EP (Extreme Pressure) additives to improve its performance with loaded gear meshes. The Squadron should notify the lab if a change to DOD-L-85734 lubricant is made in order to establish a baseline for this lubricant. Establishment of a baseline is essential in analyzing tail rotor gearboxes using the DOD-L-85734 lubricant. MIL-L-7808 lubricant will continue to be used for cold-weather operation. When used in gearboxes which had been operated with MIL-L-23699 or MIL-L-7808 lubricant, the DOD-L-85734 lubricant has a detergent effect. This may cause an increase in wear metal levels as seen in spectrometric analysis of oil samples. Lab personnel should use caution when analyzing oil samples in these cases, as the increase in wear metal levels may give the same indications that component wear would give. After gearboxes which have changed to DOD-L-85734 have operated for 50 - 100 flight hours, have the Squadron perform a drain and flush to remove wear metals from the gearbox.

b. Oil analysis laboratory personnel should not hesitate to request a drain and flush of the tail rotor gearbox if they believe it is warranted. Removal of contaminants and wear particles from the gearbox lubricant is the best method to prolong gearbox life and prevent future problems. Drain and flush procedures are given in paragraph 7 below.

3. Oil analysis lab personnel may receive oil samples either from a regular interval sampling, or whenever the Squadron experiences a problem with the tail rotor gearbox on their aircraft. The regular sampling interval is 30 flight hours IAW A1-H60VA-MRC-350. The most common cause for a Squadron to send a special sample to the oil analysis laboratory is when there are chips present in the gearbox. Table A-1 gives the chip evaluation criteria for tail rotor gearboxes. This criteria may be used by laboratory personnel to assist in the evaluation of the condition of a tail rotor gearbox from which chips were identified.

4. All oil samples submitted for analysis should be checked for water contamination. The limit is 1200 PPM or 0.120%. Gearboxes with water contamination should be drained and flushed per paragraph 7 below in an attempt to prevent gearbox housing corrosion. See paragraph 6b for further information.

VH-60N (Cont.)
TAIL GEARBOX

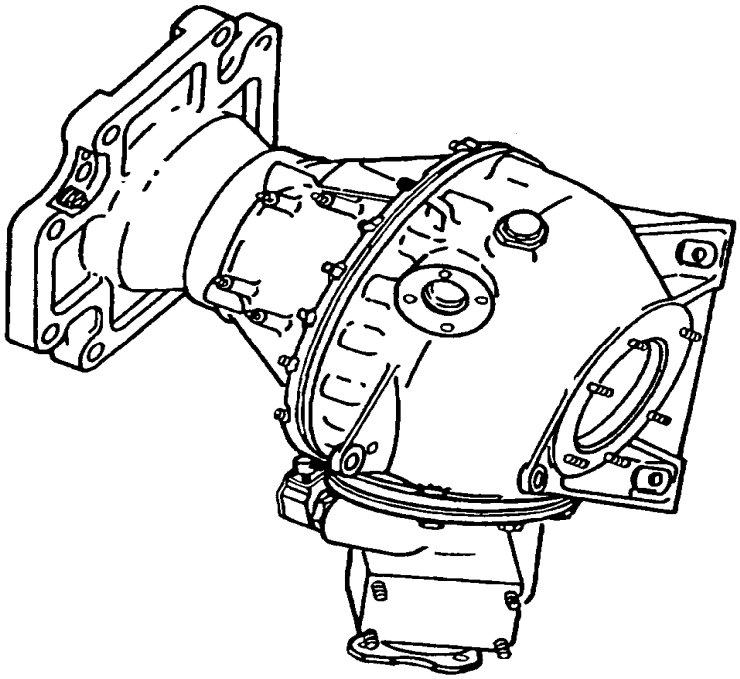

Figure A-5. Tail Rotor Gearbox

VH-60N (Cont.)
TAIL GEARBOX

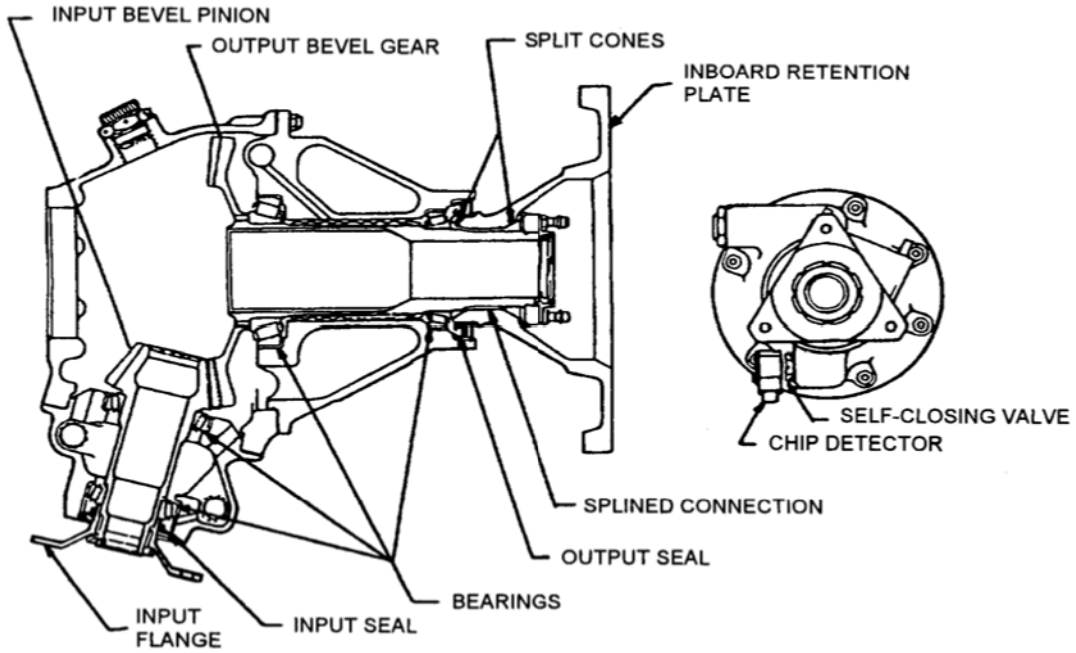

Figure A-6. Tail Rotor Gearbox Nomenclature

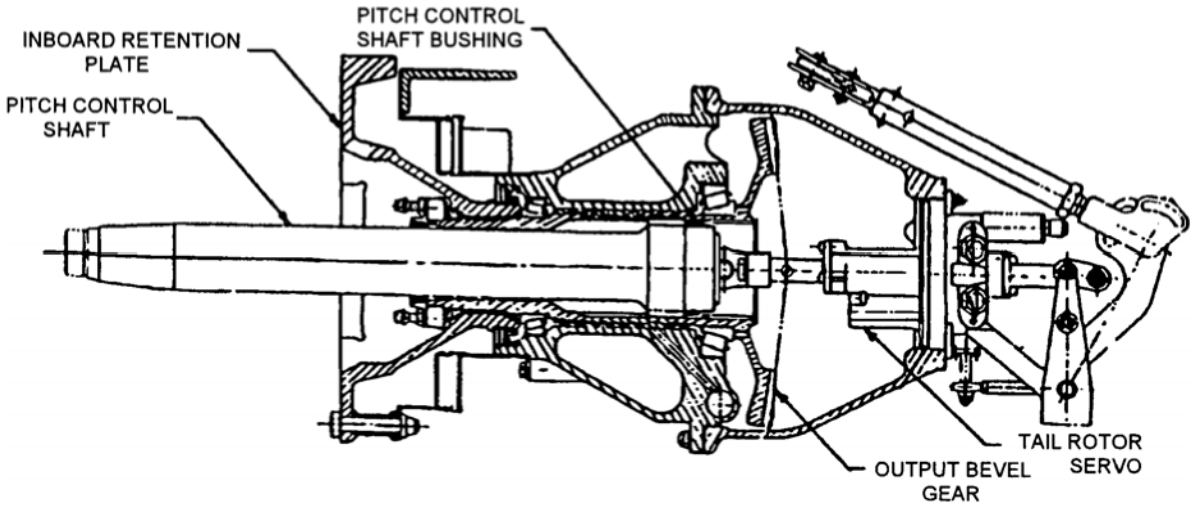

Figure A-7. Tail Rotor Gearbox, Tail Rotor Servo, & Pitch Control Shaft Assembly

VH-60N (Cont.)
TAIL GEARBOX

Table A-8. Chip Evaluation Criteria

MATERIAL	TYPE - QUANTITY - SIZE	ACTION REQUIRED
Magnetic (Steel)	Particles too small to measure	None
	Less than 10 particles, none over 1/32" diameter and 1/4" long.	Perform a serviceability check IAW applicable aircraft maintenance manual.
	Splinters or granular particles.	Perform a serviceability check IAW applicable aircraft maintenance manual.
	Chips exceeding the size and/or number criteria above.	Replace tail rotor gearbox.
Non-Magnetic	All particle sizes.	Perform a serviceability check IAW applicable aircraft maintenance manual.

5. Sources of wear metal elements in oil samples are given in Table A-3.

a. Iron (Fe) - Iron wear particles may indicate wear of the gears, bearings, bearing liners, or pitch control shaft. For further information on iron wear metal, see paragraph 6a below.

b. Aluminum (Al) - Aluminum wear particles may indicate wear of the inboard retention split cones (copper would also be present), or corrosion of the input pinion plug. Aluminum is not used as a primary means of detecting component wear. If titanium is normal, no action is required.

c. Titanium (Ti) - Titanium wear particles may indicate wear of the inboard retention plate splines or the input flange splines. Wear of the inboard retention plate splines would also result in high aluminum and copper wear metal levels. Wear of the input flange splines would also result in high aluminum wear metal levels. Performance of torque checks on the nuts/bolts connecting the input flange/inboard retention plate to the gearbox is used to determine if wear of these splines is present. See also paragraph 6c and 6d below.

d. Magnesium (Mg) - Magnesium wear particles usually indicate that corrosion of the gearbox housing(s) is present. The most common location of gearbox corrosion is the tail rotor servo bore area. See also paragraph 6b below.

NOTES

The squadron will submit a baseline sample 9 – 13 hours after installation of new oilite bushing.

The oil may not have been changed when the pitch change shaft with the oilite bushing was installed in the tail rotor gearbox

VH-60N (Cont.)
TAIL GEARBOX

e. Copper (Cu) – Copper is not a critical wear metal in the VH-60N tail rotor gearbox. Copper usually indicates wear on the pitch change shaft oilite bronze bushing from sliding contact with the inner diameter of the steel output bevel gear. Iron from the bevel gear will often accompany copper. Wear on the oilite bushing is common and is the subject of dimensional inspection during scheduled removals. Wear is typically greater in the first 100 – 200 flight hours on a new bushing installation. Wear is the greatest with a new bushing in a 70358-26600-044 tail rotor gearbox. (The –044 gearbox contains the output bevel gear with shotpeened inner diameter, which has a rougher surface finish, thereby causing greater abrasion on the oilite bushing.) Because wear is common and regular scheduled inspections gage wear on the oilite bushing, limited maintenance action is recommended for copper or copper/iron contamination in the first 100 hours of service on a new bushing. The only exception to this is if copper levels exceed 200 PPM and/or copper is accompanied by other critical wear metals. (See Table A-2 for applicable maintenance actions and other critical wear metal criteria.) Between 100 – 200 flight hours, maintenance actions should be limited to oil change if the copper level exceeds 100 PPM, provided other critical wear metals are not involved. After 200 flight hours, a dimensional inspection of the bushing should be performed only when copper levels exceed 75 PPM for two consecutive monitoring intervals. Other sources of copper in the tail rotor gearbox are the aluminum bronze split cones on the inboard retention plate and the cage material on the duplex ball bearing in the tail rotor servo coupling. Split cones can contribute copper and aluminum to the oil if wear/fretting occurs. (See supplementary information for aluminum.) The duplex ball bearing is inside the pitch change shaft and is not normally exposed to oil flow.

Table A-9. Excessive Copper Wear

Hours (since new bushing)	Cu (PPM)	Action
≤ 100	≤ 200	No maintenance required
≤ 100	> 200	Drain, refill. Sample at 25 hours
>100 & d 200	≤ 100	No maintenance required
>100 & d 200	> 100	Drain, refill @ 200 hrs since new bushing
> 200	≤ 75	No maintenance required
> 200	> 75*	Perform dimensional inspection of bushing

*For two consecutive 30-hour samples

f. Silver (Ag) - Silver is used as plating on the input pinion and output gear splines. Presence of silver wear particles usually indicates spline wear is occurring. Performance of torque checks on the nuts/bolts connecting the input flange/inboard retention plate to the gearbox is used to determine if wear of these splines is present. See also paragraphs 6c and 6d below.

g. Chromium (Cr) – Chromium in the tail gearbox indicates wear of input and/or output flange sleeves. Normal service wear on either sleeve is benign and requires no maintenance action until leakage rate exceeds allowable limits of general aircraft information manual.

VH-60N (Cont.)
TAIL GEARBOX

h. Silicon (Si) - Silicon should be monitored due to its potential for causing abrasive wear inside the gearbox. Usual sources are contamination from dirt and sand, or from silicon-based grease through the pitch control shaft seal. Drain and flushes are recommended for silicon levels over 100 PPM.

i. Lead (Pb) – Lead may appear but does not impact operation of aircraft. Continue to operate with no corrective action required.

j. Nickel (Ni) – Nickel is a component of steels used in gears, bearings, and sleeves in the gearbox. It is also used as a base plating for a chrome layer used on the input and output flange sleeves. Because plating applications are under 0.005-0.007 inch layer of chrome, wear on nickel plating would be preceded by abnormal levels of chromium. More likely source of nickel is wear or corrosion of a gear, bearing, or sleeve. Because steels will normally produce iron in greater quantity, iron level is used for maintenance decisions on these components. (See supplementary information above on iron).

Table A-10. Element Sources

Element	Component	Source
Fe (Iron)	Input pinion	Wear with gear.
	Output gear	Wear with pinion.
	Bearing rollers, races and cages	Rolling wear.
	Pitch change shaft	Wear with gear I.D.
Al (Aluminum)	Input pinion plug	Corrosion.
	Input flange[1]	Seal wear.
	Inboard retention Plate [1]	Spline wear.
	Split cones[1]	Wear with gear and retention plate.
	Pitch control shaft bushing[1]	Wear with gear I.D.
Ti (Titanium)	Input flange	Seal wear.
	Inboard retention plate	Spline wear.
Mg (Magnesium)	Housings.	Corrosion.
	Oil spiral.	Corrosion.
Cu (Copper)	Split cones	Wear with gear and retention plate.
	Pitch control shaft bushing	Wear with gear I.D.
Ag (Silver)	Input pinion [1]	Spline wear.
	Output pinion[1]	Spline wear.

2. Indicates that the element is not the primary constituent for this component.
Trace amounts of C (Carbon), Mn (Manganese), P (Phosphorus), S (Sulfur), Ni (Nickel), Cr (Chromium), Mo (Molybdenum), Zn (Zinc), Sn (Tin), Pb (Lead), and V (Vanadium) may also be detected. No action is required.

VH-60N (Cont.)
TAIL GEARBOX

6. Important tail rotor gearbox wear modes are shown in Table A-4. Each wear mode is further discussed below.

a. Gear/bearing wear - Gearbox chip lights indication should be used as the primary indicator of gear and bearing wear. Chips present in the gearbox should be evaluated per Table A-1. Trending of chip sizes/numbers over a time interval should be accomplished when chips are identified (either through analysis at the oil analysis laboratory or from chip lights) but do not meet the removal criteria in Table A-1. Lab personnel may require more frequent sampling if their trending analysis indicates the remove criteria of Table A-1 may be exceeded before the next regularly scheduled sampling is due. Regardless of whether there were chips, the gearbox should be drained and flushed (ref. Paragraph 7) as needed to remove any particles that may cause further wear if allowed to remain inside the gearbox. Indications of iron wear metal in spectrometric analysis samples without accompanying chip lights, Ferrographic, or microscopic indications shall be tracked but shall not be cause for recommendations for removal/replacement of the gearbox. Because pitch change shaft bushing wear is common, and regular scheduled inspections gage the wear on the oilite bushing, no maintenance action is recommended for iron contamination when accompanied by copper in the first 100 hours of service with a new bushing. However, maintenance action is recommended for iron contamination when accompanied by other critical wearmetals (see supplementary information for applicable wearmetal) in the first 100 hours of service with a new bushing. After initial 100 flight hours, maintenance action should be limited to oil change if iron level exceeds 45 PPM, provided other critical wearmetals are not involved.

Table A-11. Wear Modes and Diagnostic Methods

Wear Mode	Diagnostic Method	Criteria
Gear Wear.	Chip lights -or- Ferrographic/microscopic.	Table 1. Chip size/count.
Bearing Wear.	Chip lights -or- Ferrographic/microscopic.	Table 1. Chip size/count.
Housing Corrosion.	Spectrometric.	Magnesium PPM level.
Inboard Retention Plate/ Output Gear Spline Wear.	Spectrometric **-and-** Inboard retention plate nut bolt torque check (per applicable aircraft maintenance manual)	Titanium and Aluminum PPM levels. Failure to stabilize torque (per applicable aircraft maintenance manual)
Split Cone Wear.	Spectrometric **-and-** Inboard retention plate nut Bolt torque check (per applicable aircraft maintenance manual)	Copper and Aluminum PPM levels. Failure to stabilize torque (per applicable aircraft maintenance manual
Pitch Control Shaft Bushing Wear.	Inspection (Phase, per A1-H60VA-MRC-400)	Bushing OD (per A1-H60VA-MRC-400)

b. Housing corrosion - Housing corrosion is identified by an increase in magnesium wear metal levels in spectrometric analysis results. At the first instance of an upward trend in magnesium levels, recommend the Squadron drain and flush the tail rotor gearbox (reference paragraph 7) to insure any water contamination is removed. If magnesium wear metal levels increase past the high range, recommend the Squadron remove the tail rotor servo and inspect the servo bore area and the gearbox ID for signs of corrosion. If corrosion is found it should be repaired per applicable aircraft maintenance manual. If the corrosion cannot be repaired, the gearbox should be replaced. If corrosion cannot be identified, and magnesium wear metal levels continue to increase into the abnormal range, the gearbox should be replaced. Lab personnel may require more frequent sampling if a trending analysis indicates the magnesium wear metal level may exceed the abnormal range before the next regularly scheduled sampling is due.

VH-60N (Cont.)
TAIL GEARBOX

c. Inboard retention plate/output gear spline wear - Wear of the inboard intention plate/output gear splines is characterized by an increase in the levels of Ti (titanium), Al (aluminum), and Ag (silver) wear metals. An increase in aluminum wear metal levels alone, without an accompanying rise in titanium wear metal levels, does not explicitly indicate spline wear. Titanium and/or aluminum levels may be in the marginal/high range on new gearboxes (less than 100 flight hours since new/overhauled) due to normal break-in wear of the internal components. If spline wear is suspected (titanium in the high/abnormal range), recommend that the Squadron perform an inboard retention plate nut bolt torque check, and report their findings (bolt torques) and observations to the lab. Do not recommend removal of the inboard retention plate to inspect the split cones/splines. This action should only be taken as a direct result of the torque check. If no action is required from this check, continue to track titanium levels. Do not recommend further action unless titanium levels increase over an additional 100 flight hours. If the levels increase over this interval, recommend another inboard retention plate nut bolt/input flange nut torque check be accomplished.

d. Split cone wear - Wear of the split cones is not easily identified in the tail rotor gearbox. Wear of the split cones would result in an increase in copper and aluminum wear metal levels. However, increases in copper wear metal levels due to wear of the pitch control shaft bushing usually masks any increase in copper levels associated with wear of the split cones. The presence of high levels of aluminum in spectrometric analysis is not indicative of split cone wear. Wear of the inboard retention plate spline and of the pitch control shaft bushing also contribute to high aluminum wear metals levels.

e. Pitch control shaft bushing wear – Wear of this bushing is characterized by high (in some cases extremely high – up to 200 PPM) levels of copper and (up to 60 PPM) of iron wearmetal in the oil samples. This is especially common on new, overhauled, or DLI (Depot Level Inspected) gearboxes. This wear is expected due to normal wear-in and is not cause for additional maintenance. The Squadron is required to perform a dimensional inspection of this bushing for wear every 500 hours.
Because wear is common and regular scheduled inspections gage wear on the oilite bushing, no maintenance action is recommended for copper or copper accompanied by other critical wearmetals (see supplementary information for applicable wearmetal). After the initial 100 flight hours, maintenance action should be limited to oil change if the copper level exceeds 100 PPM, provided other critical wearmetals are not involved. Other sources of copper in the tail gearbox are the aluminum bronze split cones on the inboard retention plate and the cage material on the duplex ball bearing in the tail rotor servo coupling. Split cones can contribute copper and aluminum if wear/fretting occurs (see supplementary information for aluminum). The duplex ball bearing is inside the pitch change shaft and is not normally exposed to oil flow. After 200 hours of operations, since new, overhaul or DLI, a dimensional inspection of the bushing OD may also be recommended when the copper level exceeds 75 PPM for two consecutive 30-hour sampling periods.

7. The Squadron should use the following drain and flush procedures to insure all contaminants/wear metals are removed from the inside of the gearbox.

a. Remove filler cap.

b. Drain gearbox.

c. Remove chip detector self-closing valve.

d. Place a funnel under the chip detector self-closing valve opening. Place a 2 gallon container under the funnel.

VH-60N (Cont.)
TAIL GEARBOX

CAUTION

Damage to equipment will occur if foreign objects enter gearbox. Foreign objects may enter gearbox when tail rotor servo is removed. Ensure that no foreign objects enter the gearbox during performance of this task.

e. Remove tail rotor servo.

f. Inspect inside of tail rotor gearbox, especially the inside diameter of the input bevel pinion, for buildup of sludge and debris accumulation. Remove sludge/debris using a clean dry cloth. Insure no debris is left inside the gearbox.

g. Flush gearbox with clean lube oil. Repeat using clean oil until oil drained from gearbox is clean with no trace or debris. Insure oil stream is directed against entire inside of gearbox to insure all debris is flushed from the gearbox.

h. Install chip detector self-closing valve, chip detector, and electrical connector.

i. Install tail rotor servo.

j. Fill gearbox with proper amount of oil.

k. Reinstall filler cap.

l. Make sure area is clean and free of foreign material.

GTCP36-50 (APU)
(A-10)

JOAP ATOMIC EMISSION ROTRODE

	Fe	Ag	Al	Cr	Cu	Mg	Sn	B	Si	Zn
Abnormal Trend (PPM Increase in 10 hrs)	5	2	2	2	6	2	5			
Normal Range	0-12	0-3	0-3	0-3	0-15	0-3	0-12			
Marginal Range	13-16	N/A	N/A	N/A	16-20	N/A	13-15			
High Range	17-20	4-5	4-5	4-5	21-23	4-5	16-18			
Abnormal	≥21	≥6	≥6	≥	≥24	≥6	≥19	10	10	10

Elevated boron (B) and/or zinc (Zn) concentrations usually indicate contamination with another oil type, primarily MIL-PRF-2104. Recommend resampling and retesting immediately. If new value exceeds 8.0 PPM, run check with D19-0 to ensure proper instrument function. When proper function is confirmed, report both results and suspected contamination with MIL-PRF-2104 to chain of command, maintenance chief, cognizant engineering authority (Army and Navy only), and other personnel as specified by local written procedures. Recommend flushing and retesting of contaminated pre-oilers, carts, or other reservoirs where contamination is found until both B and Zn concentrations fall below 8.0 PPM. Refer to JOAP Manual Volume II Section IX, page 9-1 for more information. Recommend segregation of confirmed or suspected contaminated stocks, and submit information (batch no., lot no., MIL-PRF, nature of problem, etc.) on such stocks through the Defense supply deficiency reporting system.

Elevated silicon (Si) concentration usually indicates contamination with soil, sand, or dust. If aluminum (Al) is also elevated, this suggests the presence of clay or soil. Recommend resampling and retesting immediately. If new value exceeds 8.0 PPM, run check with D19-0 to ensure proper instrument function. When proper function is confirmed, report both results and suspected contamination with soil, sand, or dust to chain of command, maintenance chief, cognizant engineering authority (Army and Navy only), and other personnel as specified by local written procedures. Recommend flushing and retesting of contaminated pre-oilers, carts, or other reservoirs where contamination is found until silicon concentration falls below 8.0 PPM. Refer to JOAP Manual Volume II Section IX, page 9-1 for more information. Recommend segregation of confirmed or suspected contaminated stocks, and submit information (batch no., lot no., MIL-PRF, nature of problem, etc.) on such stocks through the Defense supply deficiency reporting system.

Fe	Starter clutch shaft Oil pump gear, shaft Generator and hydraulic drive gears Ring gear Planetary & sun gears, and shafts
Fe & Cr	Generator and hydraulic pad bearings Main drive bearings Idler gear bearings Planetary gear bearings
Fe Cr & Mo	Main shaft bearings

GTCP36-50 (APU) (Cont.)
(A-10)

Al		Gearbox housing Oil pump housing
Cu & Sn		Oil pump bushing Starter clutch bearings
Ag		(Plating) Main shaft rear bearing

GTCP36-16A (APU)
(C-27)

JOAP ATOMIC EMISSION ROTRODE

	Fe	Ag	Al	Cr	Cu	Mg	Ni	Pb	Si	Sn	Ti	Mo	B	Zn
Abnormal Trend (PPM Increase in 10 hrs)	5	2	2	2	6	2	4	8	6	5	2	4		
Normal Range	0-12	0-3	0-3	0-3	0-15	0-8	0-5	0-26	0-15	0-12	0-3	0-5		
Marginal Range	13-16	4	4	4	16-20	9-11	6	27-36	16-17	13-15	4	6		
High Range	17-20	5	5	5	21-23	12-14	7	37-42	18-19	16-18	5	7		
Abnormal	≥21	≥6	≥6	≥6	≥24	≥15	≥8	≥43	≥20	≥19	≥6	≥8	10	10

Elevated boron (B) and/or zinc (Zn) concentrations usually indicate contamination with another oil type, primarily MIL-PRF-2104. Recommend resampling and retesting immediately. If new value exceeds 8.0 PPM, run check with D19-0 to ensure proper instrument function. When proper function is confirmed, report both results and suspected contamination with MIL-PRF-2104 to chain of command, maintenance chief, cognizant engineering authority (Army and Navy only), and other personnel as specified by local written procedures. Recommend flushing and retesting of contaminated pre-oilers, carts, or other reservoirs where contamination is found until both B and Zn concentrations fall below 8.0 PPM. Refer to JOAP Manual Volume II Section IX, page 9-1 for more information. Recommend segregation of confirmed or suspected contaminated stocks, and submit information (batch no., lot no., MIL-PRF, nature of problem, etc.) on such stocks through the Defense supply deficiency reporting system.

GTCP36-200/201C (APU)
(C-2), (F-18) (NAVY)

JOAP ATOMIC EMISSION ROTRODE

	Fe	Ag	Al	Cr	Cu	Mg	Ti	B	Si	Zn
Abnormal Trend (PPM Increase in 10 hrs)	4		2	2	2	3	3			
Normal Range	0-9		0-4	0-3	0-3	0-5	0-5			
Marginal Range	10		5	4	4	6	6			
High Range	11-12		6	5	5	7-8	7-8			
Abnormal	≥13		≥7	≥6	≥6	≥9	≥9	10	10	10

Elevated boron (B) and/or zinc (Zn) concentrations usually indicate contamination with another oil type, primarily MIL-PRF-2104. Recommend resampling and retesting immediately. If new value exceeds 8.0 PPM, run check with D19-0 to ensure proper instrument function. When proper function is confirmed, report both results and suspected contamination with MIL-PRF-2104 to chain of command, maintenance chief, cognizant engineering authority (Army and Navy only), and other personnel as specified by local written procedures. Recommend flushing and retesting of contaminated pre-oilers, carts, or other reservoirs where contamination is found until both B and Zn concentrations fall below 8.0 PPM. Refer to JOAP Manual Volume II Section IX, page 9-1 for more information. Recommend segregation of confirmed or suspected contaminated stocks, and submit information (batch no., lot no., MIL-PRF, nature of problem, etc.) on such stocks through the Defense supply deficiency reporting system.

Elevated silicon (Si) concentration usually indicates contamination with soil, sand, or dust. If aluminum (Al) is also elevated, this suggests the presence of clay or soil. Recommend resampling and retesting immediately. If new value exceeds 8.0 PPM, run check with D19-0 to ensure proper instrument function. When proper function is confirmed, report both results and suspected contamination with soil, sand, or dust to chain of command, maintenance chief, cognizant engineering authority (Army and Navy only), and other personnel as specified by local written procedures. Recommend flushing and retesting of contaminated pre-oilers, carts, or other reservoirs where contamination is found until silicon concentration falls below 8.0 PPM. Refer to JOAP Manual Volume II Section IX, page 9-1 for more information. Recommend segregation of confirmed or suspected contaminated stocks, and submit information (batch no., lot no., MIL-PRF, nature of problem, etc.) on such stocks through the Defense supply deficiency reporting system.

In the event any critical element (wear metal) increases to the high range or an abnormal trend is indicated, take the following steps:

1. Confirm by obtaining check sample.

2. Drain oil in accordance with maintenance manual AI-C2AHA-GAI-200, reservice, conduct a 15-minute operational run, and send oil sample to JOAP/NOAP lab.

3. If metal concentration range is abnormal, replace APU.

GTCP36-200/201C (APU) (Cont.)
(C-2), (F-18) (NAVY)

4. If metal concentration range is below range, release for flight and take additional samples after 1 hour operation. If an abnormal trend is indicated, recommend removal and request an engineering investigation.

5. Recommend close surveillance for the next 10 operating hours after the initial abnormal analysis.

NOTES

The requirement for routine oil analysis on the GTCP36-200 APU In the F-18 series aircraft has been deleted. Evaluation criteria is being retained for reference and use as directed by cognizant authority.

GTCP36-201A (APU)
(S-3A/B) (NAVY)

JOAP ATOMIC EMISSION ROTRODE

	Fe	Ag	Al	Cr	Cu	Mg	Ti	B	Si	Zn
Abnormal Trend (PPM Increase in 10 hrs)	4		2	2	4	3	3			
Normal Range	0-9		0-4	0-3	0-6	0-5	0-5			
Marginal Range	10		5	4	7-9	6	6			
High Range	11-12		6	5	10-12	7-8	7-8			
Abnormal	≥13		≥7	≥6	≥13	≥9	≥9	10	10	10

Elevated boron (B) and/or zinc (Zn) concentrations usually indicate contamination with another oil type, primarily MIL-PRF-2104. Recommend resampling and retesting immediately. If new value exceeds 8.0 PPM, run check with D19-0 to ensure proper instrument function. When proper function is confirmed, report both results and suspected contamination with MIL-PRF-2104 to chain of command, maintenance chief, cognizant engineering authority (Army and Navy only), and other personnel as specified by local written procedures. Recommend flushing and retesting of contaminated pre-oilers, carts, or other reservoirs where contamination is found until both B and Zn concentrations fall below 8.0 PPM. Refer to JOAP Manual Volume II Section IX, page 9-1 for more information. Recommend segregation of confirmed or suspected contaminated stocks, and submit information (batch no., lot no., MIL-PRF, nature of problem, etc.) on such stocks through the Defense supply deficiency reporting system.

Elevated silicon (Si) concentration usually indicates contamination with soil, sand, or dust. If aluminum (Al) is also elevated, this suggests the presence of clay or soil. Recommend resampling and retesting immediately. If new value exceeds 8.0 PPM, run check with D19-0 to ensure proper instrument function. When proper function is confirmed, report both results and suspected contamination with soil, sand, or dust to chain of command, maintenance chief, cognizant engineering authority (Army and Navy only), and other personnel as specified by local written procedures. Recommend flushing and retesting of contaminated pre-oilers, carts, or other reservoirs where contamination is found until silicon concentration falls below 8.0 PPM. Refer to JOAP Manual Volume II Section IX, page 9-1 for more information. Recommend segregation of confirmed or suspected contaminated stocks, and submit information (batch no., lot no., MIL-PRF, nature of problem, etc.) on such stocks through the Defense supply deficiency reporting system.

In the event any critical element (wear metal) increases to the high range or an abnormal trend is indicated, take the following steps:

1. Confirm by obtaining check sample.
2. Drain oil in accordance with maintenance manual NAVAIR 01-S3AAA-2-4.4.1, flush or change filters (2), reservice, conduct a 15-minute operational run, and send oil sample to JOAP/NOAP lab.
3. If metal concentration range is abnormal, replace APU.
4. If metal concentration range is below range, release for flight and take additional samples after 1 hour operation. If an abnormal trend is indicated, recommend removal and request an engineering investigation.
5. Recommend close surveillance for the next 10 operating hours after the initial abnormal analysis.

GTCP165-1(APU)
(C-5)

JOAP ATOMIC EMISSION ROTRODE

	Fe	Ag	Al	Cr	Cu	Mg	B	Si	Zn
Abnormal Trend (PPM Increase in 10 hrs)	10	2	4	2	4	10			
Normal Range	0-33	0-3	0-10	0-3	0-13	0-33			
Marginal Range	34-40	N/A	11-12	4	14-16	34-40			
High Range	41-49	4	13-14	5	17-19	41-49			
Abnormal	≥50	≥5	≥15	≥6	≥20	≥50	10	10	10

Elevated boron (B) and/or zinc (Zn) concentrations usually indicate contamination with another oil type, primarily MIL-PRF-2104. Recommend resampling and retesting immediately. If new value exceeds 8.0 PPM, run check with D19-0 to ensure proper instrument function. When proper function is confirmed, report both results and suspected contamination with MIL-PRF-2104 to chain of command, maintenance chief, cognizant engineering authority (Army and Navy only), and other personnel as specified by local written procedures. Recommend flushing and retesting of contaminated pre-oilers, carts, or other reservoirs where contamination is found until both B and Zn concentrations fall below 8.0 PPM. Refer to JOAP Manual Volume II Section IX, page 9-1 for more information. Recommend segregation of confirmed or suspected contaminated stocks, and submit information (batch no., lot no., MIL-PRF, nature of problem, etc.) on such stocks through the Defense supply deficiency reporting system.

Elevated silicon (Si) concentration usually indicates contamination with soil, sand, or dust. If aluminum (Al) is also elevated, this suggests the presence of clay or soil. Recommend resampling and retesting immediately. If new value exceeds 8.0 PPM, run check with D19-0 to ensure proper instrument function. When proper function is confirmed, report both results and suspected contamination with soil, sand, or dust to chain of command, maintenance chief, cognizant engineering authority (Army and Navy only), and other personnel as specified by local written procedures. Recommend flushing and retesting of contaminated pre-oilers, carts, or other reservoirs where contamination is found until silicon concentration falls below 8.0 PPM. Refer to JOAP Manual Volume II Section IX, page 9-1 for more information. Recommend segregation of confirmed or suspected contaminated stocks, and submit information (batch no., lot no., MIL-PRF, nature of problem, etc.) on such stocks through the Defense supply deficiency reporting system.

GTCP85-98 / TE-8A (APU)
(C-9) (AIR FORCE)

JOAP ATOMIC EMISSION ROTRODE

	Fe	Ag	Al	Cr	Cu	Mg	Sn	B	Si	Zn
Abnormal Trend (PPM Increase in 10 hrs)	2	2	2	2	2	2	5			
Normal Range	0-5	0-1	0-1	0-1	0-5	0-3	0-11			
Marginal Range	6	N/A	N/A	N/A	6-7	N/A	12-13			
High Range	7	2	2	2	8	4	14			
Abnormal	≥8	≥3	≥3	≥3	≥9	≥	≥15	10	10	10

Elevated boron (B) and/or zinc (Zn) concentrations usually indicate contamination with another oil type, primarily MIL-PRF-2104. Recommend resampling and retesting immediately. If new value exceeds 8.0 PPM, run check with D19-0 to ensure proper instrument function. When proper function is confirmed, report both results and suspected contamination with MIL-PRF-2104 to chain of command, maintenance chief, cognizant engineering authority (Army and Navy only), and other personnel as specified by local written procedures. Recommend flushing and retesting of contaminated pre-oilers, carts, or other reservoirs where contamination is found until both B and Zn concentrations fall below 8.0 PPM. Refer to JOAP Manual Volume II Section IX, page 9-1 for more information. Recommend segregation of confirmed or suspected contaminated stocks, and submit information (batch no., lot no., MIL-PRF, nature of problem, etc.) on such stocks through the Defense supply deficiency reporting system.

Elevated silicon (Si) concentration usually indicates contamination with soil, sand, or dust. If aluminum (Al) is also elevated, this suggests the presence of clay or soil. Recommend resampling and retesting immediately. If new value exceeds 8.0 PPM, run check with D19-0 to ensure proper instrument function. When proper function is confirmed, report both results and suspected contamination with soil, sand, or dust to chain of command, maintenance chief, cognizant engineering authority (Army and Navy only), and other personnel as specified by local written procedures. Recommend flushing and retesting of contaminated pre-oilers, carts, or other reservoirs where contamination is found until silicon concentration falls below 8.0 PPM. Refer to JOAP Manual Volume II Section IX, page 9-1 for more information. Recommend segregation of confirmed or suspected contaminated stocks, and submit information (batch no., lot no., MIL-PRF, nature of problem, etc.) on such stocks through the Defense supply deficiency reporting system.

GTC85-71(APU)
(C-130)

JOAP ATOMIC EMISSION ROTRODE

	Fe	Ag	Al	Cr	Cu	Mg	B	Si	Zn
Abnormal Trend (PPM Increase in 10 hrs)	8	*	3	2	3	3			
Normal Range	0-29	0-1	0-6	0-2	0-8	0-7			
Marginal Range	30-35	N/A	7	N/A	9-10	8			
High Range	36-43	2	8-9	3	11-12	9-10			
Abnormal	≥44	≥3	≥10	≥4	≥13	≥11	10	10	10

Elevated boron (B) and/or zinc (Zn) concentrations usually indicate contamination with another oil type, primarily MIL-PRF-2104. Recommend resampling and retesting immediately. If new value exceeds 8.0 PPM, run check with D19-0 to ensure proper instrument function. When proper function is confirmed, report both results and suspected contamination with MIL-PRF-2104 to chain of command, maintenance chief, cognizant engineering authority (Army and Navy only), and other personnel as specified by local written procedures. Recommend flushing and retesting of contaminated pre-oilers, carts, or other reservoirs where contamination is found until both B and Zn concentrations fall below 8.0 PPM. Refer to JOAP Manual Volume II Section IX, page 9-1 for more information. Recommend segregation of confirmed or suspected contaminated stocks, and submit information (batch no., lot no., MIL-PRF, nature of problem, etc.) on such stocks through the Defense supply deficiency reporting system.

Elevated silicon (Si) concentration usually indicates contamination with soil, sand, or dust. If aluminum (Al) is also elevated, this suggests the presence of clay or soil. Recommend resampling and retesting immediately. If new value exceeds 8.0 PPM, run check with D19-0 to ensure proper instrument function. When proper function is confirmed, report both results and suspected contamination with soil, sand, or dust to chain of command, maintenance chief, cognizant engineering authority (Army and Navy only), and other personnel as specified by local written procedures. Recommend flushing and retesting of contaminated pre-oilers, carts, or other reservoirs where contamination is found until silicon concentration falls below 8.0 PPM. Refer to JOAP Manual Volume II Section IX, page 9-1 for more information. Recommend segregation of confirmed or suspected contaminated stocks, and submit information (batch no., lot no., MIL-PRF, nature of problem, etc.) on such stocks through the Defense supply deficiency reporting system.

Fe & Cr	Bearing rollers and races.
Fe & Ni	Oil pump gears and shaft.
Fe & Cr Ni	Turbine and aft compressor carbon seal races. Turbine section bearing spacer and housing. Aft compressor section shaft and bearing mount. Accessory assembly carbon seal rotors, gears, shafts, bearing housing, retainers and carries. Output geardrive seal runners and bearing retainer gasket seals. Forward compressor assembly shaft and inlet compressor seal races.

GTC85-71(APU) (Cont.)
(C-130)

Cu	Oil pump bushings.
Cu & Ag	Turbine section bearing cages.
Cu & Sn	Output geardrive bearing cages. Aft compressor section bearing cages. Oil pump gear pins.
Cu & Ag Sn	Accessory assembly bearing cages.
Al & Cu	Forward compressor assembly bearing and seal housing. Oil pump body, cover and plate assembly.
Mg	Accessory case assembly.
Al & Mg	Output geardrive housing.
Al & Ni Cr	Output geardrive gears.
Ni & Cr Fe	Turbine wheel shaft.
Sn & Fe Cu	Forward compressor assembly sleeve bearing.

GTCP85-106 (APU)
(C-141)

JOAP ATOMIC EMISSION ROTRODE

	[1]Fe	Ag	Al	Cr	[1]Cu	Mg	B	Si	Zn
Abnormal Trend (PPM Increase in 10 hrs)	13	2	4	2	5	3			
Normal Range	0-43	0-2	0-10	0-4	0-20	0-6			
Marginal Range	44-53	N/A	11-12	5	21-28	7			
High Range	54-65	3	13-14	6	29-34	8-9			
Abnormal	≥66	≥4	≥15	≥7	≥35	≥10	10	10	10

[1]Increase in Fe and Cu indicates discrepancy in starter clutch area.

Elevated boron (B) and/or zinc (Zn) concentrations usually indicate contamination with another oil type, primarily MIL-PRF-2104. Recommend resampling and retesting immediately. If new value exceeds 8.0 PPM, run check with D19-0 to ensure proper instrument function. When proper function is confirmed, report both results and suspected contamination with MIL-PRF-2104 to chain of command, maintenance chief, cognizant engineering authority (Army and Navy only), and other personnel as specified by local written procedures. Recommend flushing and retesting of contaminated pre-oilers, carts, or other reservoirs where contamination is found until both B and Zn concentrations fall below 8.0 PPM. Refer to JOAP Manual Volume II Section IX, page 9-1 for more information. Recommend segregation of confirmed or suspected contaminated stocks, and submit information (batch no., lot no., MIL-PRF, nature of problem, etc.) on such stocks through the Defense supply deficiency reporting system.

Elevated silicon (Si) concentration usually indicates contamination with soil, sand, or dust. If aluminum (Al) is also elevated, this suggests the presence of clay or soil. Recommend resampling and retesting immediately. If new value exceeds 8.0 PPM, run check with D19-0 to ensure proper instrument function. When proper function is confirmed, report both results and suspected contamination with soil, sand, or dust to chain of command, maintenance chief, cognizant engineering authority (Army and Navy only), and other personnel as specified by local written procedures. Recommend flushing and retesting of contaminated pre-oilers, carts, or other reservoirs where contamination is found until silicon concentration falls below 8.0 PPM. Refer to JOAP Manual Volume II Section IX, page 9-1 for more information. Recommend segregation of confirmed or suspected contaminated stocks, and submit information (batch no., lot no., MIL-PRF, nature of problem, etc.) on such stocks through the Defense supply deficiency reporting system.

Fe & Cr	Bearing rollers and races
Al	Bearing sleeve
Fe & Ni	Oil pump gears and shaft

GTCP85-106 (APU) (Cont.)
(C-141)

Fe & Cr Ni	Turbine and aft compressor carbon seal races Turbine section bearing spacer and housing Aft compressor section shaft and bearing mount Accessory assembly carbon seal rotors, gears, shafts, bearing housing, retainers and carries Output geardrive seal runners and bearing retainer gasket seals Forward compressor assembly shaft and inlet compressor seal races
Cu	Oil pump bushings
Cu & Ag	Turbine section bearing cages
Cu & Sn	Output geardrive bearing cages Aft compressor section bearing cages Oil pump gear pins
Cu & Ag Sn	Accessory assembly bearing cages
Al & Cu	Forward compressor assembly bearing and seal housing Oil pump body, cover and plate assembly
Mg	Accessory case assembly GTCP85-106 (Cont.) (C-141 APU)
Al & Mg	Output geardrive housing
Al & Ni Cr	Output geardrive gears
Ni & Cr Fe	Turbine wheel shaft
Sn & Fe Cu	Forward compressor assembly sleeve bearing

T62T-11 (APU)
CH-46A/D/F, NCH-46A, UH-46A (NAVY)

JOAP ATOMIC EMISSION ROTRODE

	Fe	Ag	Al	Cr	Cu	Mg	B	Si	Zn
Abnormal Trend (PPM Increase in 10 hrs)	4		4		3	3			
Normal Range	0-13		0-10		0-8	0-8			
Marginal Range	14-16		11-12		9	9			
High Range	17-19		13-14		10-11	10-11			
Abnormal	≥20		≥15		≥12	≥12	10	10	10

Elevated boron (B) and/or zinc (Zn) concentrations usually indicate contamination with another oil type, primarily MIL-PRF-2104. Recommend resampling and retesting immediately. If new value exceeds 8.0 PPM, run check with D19-0 to ensure proper instrument function. When proper function is confirmed, report both results and suspected contamination with MIL-PRF-2104 to chain of command, maintenance chief, cognizant engineering authority (Army and Navy only), and other personnel as specified by local written procedures. Recommend flushing and retesting of contaminated pre-oilers, carts, or other reservoirs where contamination is found until both B and Zn concentrations fall below 8.0 PPM. Refer to JOAP Manual Volume II Section IX, page 9-1 for more information. Recommend segregation of confirmed or suspected contaminated stocks, and submit information (batch no., lot no., MIL-PRF, nature of problem, etc.) on such stocks through the Defense supply deficiency reporting system.

Elevated silicon (Si) concentration usually indicates contamination with soil, sand, or dust. If aluminum (Al) is also elevated, this suggests the presence of clay or soil. Recommend resampling and retesting immediately. If new value exceeds 8.0 PPM, run check with D19-0 to ensure proper instrument function. When proper function is confirmed, report both results and suspected contamination with soil, sand, or dust to chain of command, maintenance chief, cognizant engineering authority (Army and Navy only), and other personnel as specified by local written procedures. Recommend flushing and retesting of contaminated pre-oilers, carts, or other reservoirs where contamination is found until silicon concentration falls below 8.0 PPM. Refer to JOAP Manual Volume II Section IX, page 9-1 for more information. Recommend segregation of confirmed or suspected contaminated stocks, and submit information (batch no., lot no., MIL-PRF, nature of problem, etc.) on such stocks through the Defense supply deficiency reporting system.

NOTES

The point of contact for this equipment is Tad Tsukida (Code 05325), DSN 993-7801 or FTS (510) 263-7801.

GTCP95-2/-3 (APU)
P-3 (NAVY)

JOAP ATOMIC EMISSION ROTRODE

	Fe	Ag	Al	Cr	Cu	Mg	B	Si	Zn
Abnormal Trend (PPM Increase in 10 hrs)	6		4		4	6			
Normal Range	0-18		0-12		0-13	0-20			
Marginal Range	19-22		13-15		14-16	21-25			
High Range	23-26		16-17		17-19	26-29			
Abnormal	≥27		≥18		≥20	≥30	10	10	10

Elevated boron (B) and/or zinc (Zn) concentrations usually indicate contamination with another oil type, primarily MIL-PRF-2104. Recommend resampling and retesting immediately. If new value exceeds 8.0 PPM, run check with D19-0 to ensure proper instrument function. When proper function is confirmed, report both results and suspected contamination with MIL-PRF-2104 to chain of command, maintenance chief, cognizant engineering authority (Army and Navy only), and other personnel as specified by local written procedures. Recommend flushing and retesting of contaminated pre-oilers, carts, or other reservoirs where contamination is found until both B and Zn concentrations fall below 8.0 PPM. Refer to JOAP Manual Volume II Section IX, page 9-1 for more information. Recommend segregation of confirmed or suspected contaminated stocks, and submit information (batch no., lot no., MIL-PRF, nature of problem, etc.) on such stocks through the Defense supply deficiency reporting system.

Elevated silicon (Si) concentration usually indicates contamination with soil, sand, or dust. If aluminum (Al) is also elevated, this suggests the presence of clay or soil. Recommend resampling and retesting immediately. If new value exceeds 8.0 PPM, run check with D19-0 to ensure proper instrument function. When proper function is confirmed, report both results and suspected contamination with soil, sand, or dust to chain of command, maintenance chief, cognizant engineering authority (Army and Navy only), and other personnel as specified by local written procedures. Recommend flushing and retesting of contaminated pre-oilers, carts, or other reservoirs where contamination is found until silicon concentration falls below 8.0 PPM. Refer to JOAP Manual Volume II Section IX, page 9-1 for more information. Recommend segregation of confirmed or suspected contaminated stocks, and submit information (batch no., lot no., MIL-PRF, nature of problem, etc.) on such stocks through the Defense supply deficiency reporting system.

T62T-27 (APU)
(H-53)

JOAP ATOMIC EMISSION ROTRODE

	Fe	Ag	Al	Cr	Cu	Mg	B	Si	Zn
Abnormal Trend (PPM Increase in 10 hrs)	4		4		3	3			
Normal Range	0-13		0-10		0-8	0-8			
Marginal Range	14-16		11-12		9	9			
High Range	17-19		13-14		10-11	10-11			
Abnormal	≥20		≥15		≥12	≥12	10	10	10

Elevated boron (B) and/or zinc (Zn) concentrations usually indicate contamination with another oil type, primarily MIL-PRF-2104. Recommend resampling and retesting immediately. If new value exceeds 8.0 PPM, run check with D19-0 to ensure proper instrument function. When proper function is confirmed, report both results and suspected contamination with MIL-PRF-2104 to chain of command, maintenance chief, cognizant engineering authority (Army and Navy only), and other personnel as specified by local written procedures. Recommend flushing and retesting of contaminated pre-oilers, carts, or other reservoirs where contamination is found until both B and Zn concentrations fall below 8.0 PPM. Refer to JOAP Manual Volume II Section IX, page 9-1 for more information. Recommend segregation of confirmed or suspected contaminated stocks, and submit information (batch no., lot no., MIL-PRF, nature of problem, etc.) on such stocks through the Defense supply deficiency reporting system.

Elevated silicon (Si) concentration usually indicates contamination with soil, sand, or dust. If aluminum (Al) is also elevated, this suggests the presence of clay or soil. Recommend resampling and retesting immediately. If new value exceeds 8.0 PPM, run check with D19-0 to ensure proper instrument function. When proper function is confirmed, report both results and suspected contamination with soil, sand, or dust to chain of command, maintenance chief, cognizant engineering authority (Army and Navy only), and other personnel as specified by local written procedures. Recommend flushing and retesting of contaminated pre-oilers, carts, or other reservoirs where contamination is found until silicon concentration falls below 8.0 PPM. Refer to JOAP Manual Volume II Section IX, page 9-1 for more information. Recommend segregation of confirmed or suspected contaminated stocks, and submit information (batch no., lot no., MIL-PRF, nature of problem, etc.) on such stocks through the Defense supply deficiency reporting system.

NOTES

The point of contact for this equipment is Graham Harlowe (Code 05311), DSN 993-7828 or FTS (510) 263-7828.

T62T-40-1 (APU)
(VH-60N)

JOAP ATOMIC EMISSION ROTRODE

	Fe	Ag	Al	Cr	Cu	Mg	Mo	B	Si	Zn
Abnormal Trend (PPM Increase in 10 hrs)	3			2	2	2	2		9	
Normal Range	0-6			0-2	0-2	0-2	0-2		0-30	
Marginal Range	7			3	3	3	3		31-37	
High Range	8-9			4	4	4	4		38-44	
Abnormal	≥10			≥5	≥5	≥5	≥5	10	≥45	10

Elevated boron (B) and/or zinc (Zn) concentrations usually indicate contamination with another oil type, primarily MIL-PRF-2104. Recommend resampling and retesting immediately. If new value exceeds 8.0 PPM, run check with D19-0 to ensure proper instrument function. When proper function is confirmed, report both results and suspected contamination with MIL-PRF-2104 to chain of command, maintenance chief, cognizant engineering authority (Army and Navy only), and other personnel as specified by local written procedures. Recommend flushing and retesting of contaminated pre-oilers, carts, or other reservoirs where contamination is found until both B and Zn concentrations fall below 8.0 PPM. Refer to JOAP Manual Volume II Section IX, page 9-1 for more information. Recommend segregation of confirmed or suspected contaminated stocks, and submit information (batch no., lot no., MIL-PRF, nature of problem, etc.) on such stocks through the Defense supply deficiency reporting system.

NOTES

Mg/Al - Magnesium and aluminum are usually observed wherever corrosion exists. However, when iron, magnesium, aluminum are present in abnormal concentrations, microscopic inspection of debris should be performed to determine whether metal is due to wear or corrosion.

Cr/Mo - Chromium and molybdenum should not be considered critical metals unless iron is present in abnormal concentrations.

GTC85
GROUND SUPPORT EQUIPMENT (NAVY)

JOAP ATOMIC EMISSION ROTRODE

	Fe	Ag	Al	Cr	Cu	Mg	B	Si	Zn
Abnormal Trend (PPM Increase in 10 hrs)	3		3		3	3			
Normal Range	0-8		0-6		0-7	0-6			
Marginal Range	9		7		8	7			
High Range	10-11		8-9		9-10	8-9			
Abnormal	≥12		≥10		≥11	≥10	10	10	10

Elevated boron (B) and/or zinc (Zn) concentrations usually indicate contamination with another oil type, primarily MIL-PRF-2104. Recommend resampling and retesting immediately. If new value exceeds 8.0 PPM, run check with D19-0 to ensure proper instrument function. When proper function is confirmed, report both results and suspected contamination with MIL-PRF-2104 to chain of command, maintenance chief, cognizant engineering authority (Army and Navy only), and other personnel as specified by local written procedures. Recommend flushing and retesting of contaminated pre-oilers, carts, or other reservoirs where contamination is found until both B and Zn concentrations fall below 8.0 PPM. Refer to JOAP Manual Volume II Section IX, page 9-1 for more information. Recommend segregation of confirmed or suspected contaminated stocks, and submit information (batch no., lot no., MIL-PRF, nature of problem, etc.) on such stocks through the Defense supply deficiency reporting system.

Elevated silicon (Si) concentration usually indicates contamination with soil, sand, or dust. If aluminum (Al) is also elevated, this suggests the presence of clay or soil. Recommend resampling and retesting immediately. If new value exceeds 8.0 PPM, run check with D19-0 to ensure proper instrument function. When proper function is confirmed, report both results and suspected contamination with soil, sand, or dust to chain of command, maintenance chief, cognizant engineering authority (Army and Navy only), and other personnel as specified by local written procedures. Recommend flushing and retesting of contaminated pre-oilers, carts, or other reservoirs where contamination is found until silicon concentration falls below 8.0 PPM. Refer to JOAP Manual Volume II Section IX, page 9-1 for more information. Recommend segregation of confirmed or suspected contaminated stocks, and submit information (batch no., lot no., MIL-PRF, nature of problem, etc.) on such stocks through the Defense supply deficiency reporting system.

GTC85-180
(M32A-60A)

JOAP ATOMIC EMISSION ROTRODE

	[1]Fe	Ag	Al	Cr	[1]Cu	Mg	B	Si	Zn
Abnormal Trend (PPM Increase in 10 hrs)	9	2	4	2	4	3			
Normal Range	0-29	0-2	0-10	0-4	0-13	0-6			
Marginal Range	30-36	N/A	11-12	5	14-16	7			
High Range	37-44	3	13-14	6	17-19	8-9			
Abnormal	≥45	≥4	≥15	≥7	≥20	≥10	10	10	10

[1]Increase in Fe and Cu indicates discrepancy in starter clutch area.

Elevated boron (B) and/or zinc (Zn) concentrations usually indicate contamination with another oil type, primarily MIL-PRF-2104. Recommend resampling and retesting immediately. If new value exceeds 8.0 PPM, run check with D19-0 to ensure proper instrument function. When proper function is confirmed, report both results and suspected contamination with MIL-PRF-2104 to chain of command, maintenance chief, cognizant engineering authority (Army and Navy only), and other personnel as specified by local written procedures. Recommend flushing and retesting of contaminated pre-oilers, carts, or other reservoirs where contamination is found until both B and Zn concentrations fall below 8.0 PPM. Refer to JOAP Manual Volume II Section IX, page 9-1 for more information. Recommend segregation of confirmed or suspected contaminated stocks, and submit information (batch no., lot no., MIL-PRF, nature of problem, etc.) on such stocks through the Defense supply deficiency reporting system.

Elevated silicon (Si) concentration usually indicates contamination with soil, sand, or dust. If aluminum (Al) is also elevated, this suggests the presence of clay or soil. Recommend resampling and retesting immediately. If new value exceeds 8.0 PPM, run check with D19-0 to ensure proper instrument function. When proper function is confirmed, report both results and suspected contamination with soil, sand, or dust to chain of command, maintenance chief, cognizant engineering authority (Army and Navy only), and other personnel as specified by local written procedures. Recommend flushing and retesting of contaminated pre-oilers, carts, or other reservoirs where contamination is found until silicon concentration falls below 8.0 PPM. Refer to JOAP Manual Volume II Section IX, page 9-1 for more information. Recommend segregation of confirmed or suspected contaminated stocks, and submit information (batch no., lot no., MIL-PRF, nature of problem, etc.) on such stocks through the Defense supply deficiency reporting system.

GTCP85-397
(M32A-60)

JOAP ATOMIC EMISSION ROTRODE

	[1]Fe	Ag	Al	Cr	[1]Cu	Mg	B	Si	Zn
Abnormal Trend (PPM Increase in 10 hrs)	11	2	4	3	4	3			
Normal Range	0-36	0-5	0-10	0-8	0-13	0-8			
Marginal Range	37-44	6	11-12	9	14-16	9			
High Range	45-54	7	13-14	10-11	17-19	10-11			
Abnormal	≥55	≥8	≥15	≥12	≥20	≥12	10	10	10

[1]Increase in Fe and Cu indicates discrepancy in bearing area.

Elevated boron (B) and/or zinc (Zn) concentrations usually indicate contamination with another oil type, primarily MIL-PRF-2104. Recommend resampling and retesting immediately. If new value exceeds 8.0 PPM, run check with D19-0 to ensure proper instrument function. When proper function is confirmed, report both results and suspected contamination with MIL-PRF-2104 to chain of command, maintenance chief, cognizant engineering authority (Army and Navy only), and other personnel as specified by local written procedures. Recommend flushing and retesting of contaminated pre-oilers, carts, or other reservoirs where contamination is found until both B and Zn concentrations fall below 8.0 PPM. Refer to JOAP Manual Volume II Section IX, page 9-1 for more information. Recommend segregation of confirmed or suspected contaminated stocks, and submit information (batch no., lot no., MIL-PRF, nature of problem, etc.) on such stocks through the Defense supply deficiency reporting system.

Elevated silicon (Si) concentration usually indicates contamination with soil, sand, or dust. If aluminum (Al) is also elevated, this suggests the presence of clay or soil. Recommend resampling and retesting immediately. If new value exceeds 8.0 PPM, run check with D19-0 to ensure proper instrument function. When proper function is confirmed, report both results and suspected contamination with soil, sand, or dust to chain of command, maintenance chief, cognizant engineering authority (Army and Navy only), and other personnel as specified by local written procedures. Recommend flushing and retesting of contaminated pre-oilers, carts, or other reservoirs where contamination is found until silicon concentration falls below 8.0 PPM. Refer to JOAP Manual Volume II Section IX, page 9-1 for more information. Recommend segregation of confirmed or suspected contaminated stocks, and submit information (batch no., lot no., MIL-PRF, nature of problem, etc.) on such stocks through the Defense supply deficiency reporting system.

Fe & Cr	Bearing rollers and races
Fe & Ni	Oil pump gears and shaft
Fe & Cr Ni	Turbine and aft compressor carbon seal races Turbine section bearing spacer and housing Aft compressor section shaft and bearing mount Accessory assembly carbon seal rotors, gears, shafts, bearing housing, retainers and Carriers Output geardrive seal runners and bearing retainer gasket seals Forward compressor assembly shaft and inlet compressor seal races

GTCP85-397 (Cont.)
(M32A-60)

Cu	Oil pump bushings
Cu & Ag	Turbine section bearing cages
Cu & Sn	Output geardrive bearing cages Aft compressor section bearing cages Oil pump gear pins
Cu & Ag Sn	Accessory assembly bearing cages
Al & Cu	Forward compressor assembly bearing and seal housing Oil pump body, cover and plate assembly
Mg	Accessory case assembly
Al & Mg	Output geardrive housing
Al & Ni Cr	Output geardrive gears
Ni & Cr Fe	Turbine wheel shaft
Sn & Fe Cu	Forward compressor assembly sleeve bearing

GTCP100
GROUND SUPPORT EQUIPMENT (NAVY)

JOAP ATOMIC EMISSION ROTRODE

	Fe	Ag	Al	Cr	Cu	Mg	B	Si	Zn
Abnormal Trend (PPM Increase in 10 hrs)	4				3				
Normal Range	0-13				0-7				
Marginal Range	14-16				8				
High Range	17-19				9-10				
Abnormal	≥20				≥11		10	10	10

Elevated boron (B) and/or zinc (Zn) concentrations usually indicate contamination with another oil type, primarily MIL-PRF-2104. Recommend resampling and retesting immediately. If new value exceeds 8.0 PPM, run check with D19-0 to ensure proper instrument function. When proper function is confirmed, report both results and suspected contamination with MIL-PRF-2104 to chain of command, maintenance chief, cognizant engineering authority (Army and Navy only), and other personnel as specified by local written procedures. Recommend flushing and retesting of contaminated pre-oilers, carts, or other reservoirs where contamination is found until both B and Zn concentrations fall below 8.0 PPM. Refer to JOAP Manual Volume II Section IX, page 9-1 for more information. Recommend segregation of confirmed or suspected contaminated stocks, and submit information (batch no., lot no., MIL-PRF, nature of problem, etc.) on such stocks through the Defense supply deficiency reporting system.

Elevated silicon (Si) concentration usually indicates contamination with soil, sand, or dust. If aluminum (Al) is also elevated, this suggests the presence of clay or soil. Recommend resampling and retesting immediately. If new value exceeds 8.0 PPM, run check with D19-0 to ensure proper instrument function. When proper function is confirmed, report both results and suspected contamination with soil, sand, or dust to chain of command, maintenance chief, cognizant engineering authority (Army and Navy only), and other personnel as specified by local written procedures. Recommend flushing and retesting of contaminated pre-oilers, carts, or other reservoirs where contamination is found until silicon concentration falls below 8.0 PPM. Refer to JOAP Manual Volume II Section IX, page 9-1 for more information. Recommend segregation of confirmed or suspected contaminated stocks, and submit information (batch no., lot no., MIL-PRF, nature of problem, etc.) on such stocks through the Defense supply deficiency reporting system.

T62T-32
(EMU-30)

JOAP ATOMIC EMISSION ROTRODE

	Fe	Ag	Al	Cr	Cu	Mg	B	Si	Zn
Abnormal Trend (PPM Increase in 10 hrs)	4	2	2	2	3	3			
Normal Range	0-13	0-3	0-3	0-3	0-8	0-8			
Marginal Range	14-16	N/A	4	N/A	9	9			
High Range	17-19	4	5	4	10-11	10-11			
Abnormal	≥20	≥5	≥6	≥5	≥12	≥12	10	10	10

Elevated boron (B) and/or zinc (Zn) concentrations usually indicate contamination with another oil type, primarily MIL-PRF-2104. Recommend resampling and retesting immediately. If new value exceeds 8.0 PPM, run check with D19-0 to ensure proper instrument function. When proper function is confirmed, report both results and suspected contamination with MIL-PRF-2104 to chain of command, maintenance chief, cognizant engineering authority (Army and Navy only), and other personnel as specified by local written procedures. Recommend flushing and retesting of contaminated pre-oilers, carts, or other reservoirs where contamination is found until both B and Zn concentrations fall below 8.0 PPM. Refer to JOAP Manual Volume II Section IX, page 9-1 for more information. Recommend segregation of confirmed or suspected contaminated stocks, and submit information (batch no., lot no., MIL-PRF, nature of problem, etc.) on such stocks through the Defense supply deficiency reporting system.

Elevated silicon (Si) concentration usually indicates contamination with soil, sand, or dust. If aluminum (Al) is also elevated, this suggests the presence of clay or soil. Recommend resampling and retesting immediately. If new value exceeds 8.0 PPM, run check with D19-0 to ensure proper instrument function. When proper function is confirmed, report both results and suspected contamination with soil, sand, or dust to chain of command, maintenance chief, cognizant engineering authority (Army and Navy only), and other personnel as specified by local written procedures. Recommend flushing and retesting of contaminated pre-oilers, carts, or other reservoirs where contamination is found until silicon concentration falls below 8.0 PPM. Refer to JOAP Manual Volume II Section IX, page 9-1 for more information. Recommend segregation of confirmed or suspected contaminated stocks, and submit information (batch no., lot no., MIL-PRF, nature of problem, etc.) on such stocks through the Defense supply deficiency reporting system.

T62T-32 (Cont.)
(EMU-30)

Fe					Oil pump gears
Fe	Cr				Bearing balls, rollers and races
Fe	Ni				Accessory drive gears, compressor shaft
Fe	Ni	&	Cr		Accessory drive planet gear, accessory drive main gear, compressor-to-turbine seal
Mg	Al	&	Zn		Reduction drive assembly housings, reduction drive housing cover
Al	Cu	Mg	&	Si	Compressor housing, oil pump housings
Cu	Si	Zn	Fe	Ag	Turbine section bearing cages
Al	Mg				Reduction drive bearing cages

A-4F/M CONSTANT SPEED DRIVE (NAVY)

JOAP ATOMIC EMISSION ROTRODE

	Fe	Ag	Al	Cr	Cu	Mg	B	Si	Zn
Abnormal Trend (PPM Increase in 10 hrs)	17				6				
Normal Range	0-56				0-20				
Marginal Range	57-68				21-25				
High Range	69-84				26-29				
Abnormal	≥85				≥30		10	10	10

Elevated boron (B) and/or zinc (Zn) concentrations usually indicate contamination with another oil type, primarily MIL-PRF-2104. Recommend resampling and retesting immediately. If new value exceeds 8.0 PPM, run check with D19-0 to ensure proper instrument function. When proper function is confirmed, report both results and suspected contamination with MIL-PRF-2104 to chain of command, maintenance chief, cognizant engineering authority (Army and Navy only), and other personnel as specified by local written procedures. Recommend flushing and retesting of contaminated pre-oilers, carts, or other reservoirs where contamination is found until both B and Zn concentrations fall below 8.0 PPM. Refer to JOAP Manual Volume II Section IX, page 9-1 for more information. Recommend segregation of confirmed or suspected contaminated stocks, and submit information (batch no., lot no., MIL-PRF, nature of problem, etc.) on such stocks through the Defense supply deficiency reporting system.

Elevated silicon (Si) concentration usually indicates contamination with soil, sand, or dust. If aluminum (Al) is also elevated, this suggests the presence of clay or soil. Recommend resampling and retesting immediately. If new value exceeds 8.0 PPM, run check with D19-0 to ensure proper instrument function. When proper function is confirmed, report both results and suspected contamination with soil, sand, or dust to chain of command, maintenance chief, cognizant engineering authority (Army and Navy only), and other personnel as specified by local written procedures. Recommend flushing and retesting of contaminated pre-oilers, carts, or other reservoirs where contamination is found until silicon concentration falls below 8.0 PPM. Refer to JOAP Manual Volume II Section IX, page 9-1 for more information. Recommend segregation of confirmed or suspected contaminated stocks, and submit information (batch no., lot no., MIL-PRF, nature of problem, etc.) on such stocks through the Defense supply deficiency reporting system.

EA-6B CONSTANT SPEED DRIVE (NAVY)

JOAP ATOMIC EMISSION ROTRODE

	Fe	Ag	Al	Cr	Cu	Mg	B	Si	Zn
Abnormal Trend (PPM Increase in 10 hrs)	4	4			6	4			
Normal Range	0-12	0-12			0-25	0-13			
Marginal Range	13-15	13-15			26-31	14-16			
High Range	16-17	16-17			32-38	17-19			
Abnormal	≥18	≥18			≥39	≥20	10	10	10

Elevated boron (B) and/or zinc (Zn) concentrations usually indicate contamination with another oil type, primarily MIL-PRF-2104. Recommend resampling and retesting immediately. If new value exceeds 8.0 PPM, run check with D19-0 to ensure proper instrument function. When proper function is confirmed, report both results and suspected contamination with MIL-PRF-2104 to chain of command, maintenance chief, cognizant engineering authority (Army and Navy only), and other personnel as specified by local written procedures. Recommend flushing and retesting of contaminated pre-oilers, carts, or other reservoirs where contamination is found until both B and Zn concentrations fall below 8.0 PPM. Refer to JOAP Manual Volume II Section IX, page 9-1 for more information. Recommend segregation of confirmed or suspected contaminated stocks, and submit information (batch no., lot no., MIL-PRF, nature of problem, etc.) on such stocks through the Defense supply deficiency reporting system.

Elevated silicon (Si) concentration usually indicates contamination with soil, sand, or dust. If aluminum (Al) is also elevated, this suggests the presence of clay or soil. Recommend resampling and retesting immediately. If new value exceeds 8.0 PPM, run check with D19-0 to ensure proper instrument function. When proper function is confirmed, report both results and suspected contamination with soil, sand, or dust to chain of command, maintenance chief, cognizant engineering authority (Army and Navy only), and other personnel as specified by local written procedures. Recommend flushing and retesting of contaminated pre-oilers, carts, or other reservoirs where contamination is found until silicon concentration falls below 8.0 PPM. Refer to JOAP Manual Volume II Section IX, page 9-1 for more information. Recommend segregation of confirmed or suspected contaminated stocks, and submit information (batch no., lot no., MIL-PRF, nature of problem, etc.) on such stocks through the Defense supply deficiency reporting system.

AV-8A, TAV-8A INTEGRATED DRIVE (NAVY)

JOAP ATOMIC EMISSION ROTRODE

	Fe	Ag	Al	Cr	Cu	Mg	B	Si	Zn
Abnormal Trend (PPM Increase in 10 hrs)	7		4	3	4	4			
Normal Range	0-24		0-13	0-6	0-11	0-10			
Marginal Range	25-29		14-16	7	12-13	11-12			
High Range	30-36		17-19	8-9	14-16	13-14			
Abnormal	≥37		≥20	≥10	≥17	≥15	10	10	10

Elevated boron (B) and/or zinc (Zn) concentrations usually indicate contamination with another oil type, primarily MIL-PRF-2104. Recommend resampling and retesting immediately. If new value exceeds 8.0 PPM, run check with D19-0 to ensure proper instrument function. When proper function is confirmed, report both results and suspected contamination with MIL-PRF-2104 to chain of command, maintenance chief, cognizant engineering authority (Army and Navy only), and other personnel as specified by local written procedures. Recommend flushing and retesting of contaminated pre-oilers, carts, or other reservoirs where contamination is found until both B and Zn concentrations fall below 8.0 PPM. Refer to JOAP Manual Volume II Section IX, page 9-1 for more information. Recommend segregation of confirmed or suspected contaminated stocks, and submit information (batch no., lot no., MIL-PRF, nature of problem, etc.) on such stocks through the Defense supply deficiency reporting system.

Elevated silicon (Si) concentration usually indicates contamination with soil, sand, or dust. If aluminum (Al) is also elevated, this suggests the presence of clay or soil. Recommend resampling and retesting immediately. If new value exceeds 8.0 PPM, run check with D19-0 to ensure proper instrument function. When proper function is confirmed, report both results and suspected contamination with soil, sand, or dust to chain of command, maintenance chief, cognizant engineering authority (Army and Navy only), and other personnel as specified by local written procedures. Recommend flushing and retesting of contaminated pre-oilers, carts, or other reservoirs where contamination is found until silicon concentration falls below 8.0 PPM. Refer to JOAP Manual Volume II Section IX, page 9-1 for more information. Recommend segregation of confirmed or suspected contaminated stocks, and submit information (batch no., lot no., MIL-PRF, nature of problem, etc.) on such stocks through the Defense supply deficiency reporting system.

F-14 CONSTANT SPEED DRIVE (NAVY)

JOAP ATOMIC EMISSION ROTRODE

	Fe	Ag	Al	Cr	Cu	Mg	B	Si	Zn
Abnormal Trend (PPM Increase in 10 hrs)	4				4				
Normal Range	0-14				0-13				
Marginal Range	15-17				14-16				
High Range	18-21				17-19				
Abnormal	≥22				≥20		10	10	10

Elevated boron (B) and/or zinc (Zn) concentrations usually indicate contamination with another oil type, primarily MIL-PRF-2104. Recommend resampling and retesting immediately. If new value exceeds 8.0 PPM, run check with D19-0 to ensure proper instrument function. When proper function is confirmed, report both results and suspected contamination with MIL-PRF-2104 to chain of command, maintenance chief, cognizant engineering authority (Army and Navy only), and other personnel as specified by local written procedures. Recommend flushing and retesting of contaminated pre-oilers, carts, or other reservoirs where contamination is found until both B and Zn concentrations fall below 8.0 PPM. Refer to JOAP Manual Volume II Section IX, page 9-1 for more information. Recommend segregation of confirmed or suspected contaminated stocks, and submit information (batch no., lot no., MIL-PRF, nature of problem, etc.) on such stocks through the Defense supply deficiency reporting system.

Elevated silicon (Si) concentration usually indicates contamination with soil, sand, or dust. If aluminum (Al) is also elevated, this suggests the presence of clay or soil. Recommend resampling and retesting immediately. If new value exceeds 8.0 PPM, run check with D19-0 to ensure proper instrument function. When proper function is confirmed, report both results and suspected contamination with soil, sand, or dust to chain of command, maintenance chief, cognizant engineering authority (Army and Navy only), and other personnel as specified by local written procedures. Recommend flushing and retesting of contaminated pre-oilers, carts, or other reservoirs where contamination is found until silicon concentration falls below 8.0 PPM. Refer to JOAP Manual Volume II Section IX, page 9-1 for more information. Recommend segregation of confirmed or suspected contaminated stocks, and submit information (batch no., lot no., MIL-PRF, nature of problem, etc.) on such stocks through the Defense supply deficiency reporting system.

S-3 INTEGRATED DRIVE GENERATOR (NAVY)

JOAP ATOMIC EMISSION ROTRODE

	Fe	Ag	Al	Cr	Cu	[1]Mg	B	Si	Zn
Abnormal Trend (PPM Increase in 10 hrs)	15		3		11	20			
Normal Range	0-48		0-8		[1]0-29	0-64			
Marginal Range	49-54		9		30-35	65-80			
High Range	55-72		10-11		36-43	81-99			
Abnormal	≥73		≥12		≥44	≥100	10	10	10

[1]If Mg is 30 PPM or above and confirmed by repeat (Check Sample), recommend Code J

Elevated boron (B) and/or zinc (Zn) concentrations usually indicate contamination with another oil type, primarily MIL-PRF-2104. Recommend resampling and retesting immediately. If new value exceeds 8.0 PPM, run check with D19-0 to ensure proper instrument function. When proper function is confirmed, report both results and suspected contamination with MIL-PRF-2104 to chain of command, maintenance chief, cognizant engineering authority (Army and Navy only), and other personnel as specified by local written procedures. Recommend flushing and retesting of contaminated pre-oilers, carts, or other reservoirs where contamination is found until both B and Zn concentrations fall below 8.0 PPM. Refer to JOAP Manual Volume II Section IX, page 9-1 for more information. Recommend segregation of confirmed or suspected contaminated stocks, and submit information (batch no., lot no., MIL-PRF, nature of problem, etc.) on such stocks through the Defense supply deficiency reporting system.

Elevated silicon (Si) concentration usually indicates contamination with soil, sand, or dust. If aluminum (Al) is also elevated, this suggests the presence of clay or soil. Recommend resampling and retesting immediately. If new value exceeds 8.0 PPM, run check with D19-0 to ensure proper instrument function. When proper function is confirmed, report both results and suspected contamination with soil, sand, or dust to chain of command, maintenance chief, cognizant engineering authority (Army and Navy only), and other personnel as specified by local written procedures. Recommend flushing and retesting of contaminated pre-oilers, carts, or other reservoirs where contamination is found until silicon concentration falls below 8.0 PPM. Refer to JOAP Manual Volume II Section IX, page 9-1 for more information. Recommend segregation of confirmed or suspected contaminated stocks, and submit information (batch no., lot no., MIL-PRF, nature of problem, etc.) on such stocks through the Defense supply deficiency reporting system.

H-1 (ALL SERIES)
HYDRAULIC SYSTEMS (ARMY AND AIR FORCE)

JOAP ATOMIC EMISSION ROTRODE

	Fe	Ag	Al	Cr	Cu	Mg	Si	B	Zn
Abnormal Trend (PPM Increase in 10 hrs)	4		7	2	4	4	9		
Normal Range	0-13		0-25	0-5	0-12	0-14	0-30		
Marginal Range	14-16		26-31	6	13-14	15-17	31-37		
High Range	17-20		32-38	7	15-18	18-21	38-44		
Abnormal	≥21		≥39	≥8	≥19	≥22	≥45	10	10

Elevated boron (B) and/or zinc (Zn) concentrations usually indicate contamination with another oil type, primarily MIL-PRF-2104. Recommend resampling and retesting immediately. If new value exceeds 8.0 PPM, run check with D19-0 to ensure proper instrument function. When proper function is confirmed, report both results and suspected contamination with MIL-PRF-2104 to chain of command, maintenance chief, cognizant engineering authority (Army and Navy only), and other personnel as specified by local written procedures. Recommend flushing and retesting of contaminated pre-oilers, carts, or other reservoirs where contamination is found until both B and Zn concentrations fall below 8.0 PPM. Refer to JOAP Manual Volume II Section IX, page 9-1 for more information. Recommend segregation of confirmed or suspected contaminated stocks, and submit information (batch no., lot no., MIL-PRF, nature of problem, etc.) on such stocks through the Defense supply deficiency reporting system.

Fe	Pump piston shoe plate and bearing assemblies
Fe & Cu	Pump piston cylinder body
Al	Servo cylinder walls
Al & Si	Servo cylinder body and seals
Mg	Pump bearing liners

NOTES

1. High concentration of Fe and Mg accompanied by a chalky color in the fluid's appearance normally indicates moisture and system corrosion.

2. High concentration of Al and Si may also indicate contamination from ground test unit.

CH-47 MH-47 (ALL SERIES)
HYDRAULIC SYSTEMS

JOAP ATOMIC EMISSION ROTRODE

	Fe	Ag	Al	Cr	Cu	Mg	B	Si	Zn
Abnormal Trend (PPM Increase in 10 hrs)	4		4	4	5	4		5	
Normal Range	0-15		0-14	0-13	0-18	0-15		0-19	
Marginal Range	16-18		15-17	14-16	19-22	16-18		20-23	
High Range	19-23		18-21	17-20	23-26	19-23		24-28	
Abnormal	≥24		≥22	≥21	≥27	≥24	10	≥29	10

Elevated boron (B) and/or zinc (Zn) concentrations usually indicate contamination with another oil type, primarily MIL-PRF-2104. Recommend resampling and retesting immediately. If new value exceeds 8.0 PPM, run check with D19-0 to ensure proper instrument function. When proper function is confirmed, report both results and suspected contamination with MIL-PRF-2104 to chain of command, maintenance chief, cognizant engineering authority (Army and Navy only), and other personnel as specified by local written procedures. Recommend flushing and retesting of contaminated pre-oilers, carts, or other reservoirs where contamination is found until both B and Zn concentrations fall below 8.0 PPM. Refer to JOAP Manual Volume II Section IX, page 9-1 for more information. Recommend segregation of confirmed or suspected contaminated stocks, and submit information (batch no., lot no., MIL-PRF, nature of problem, etc.) on such stocks through the Defense supply deficiency reporting system.

NOTES

There is no requirement for routine oil analysis on the CH-47 and MH-47 hydraulic system. Evaluation criteria are being retained for reference and for use if directed by cognizant authority.

Fe	Pump piston shoe plate or bearing assembly
Fe & Cu	Pump piston and cylinder wall
Al	Servo cylinder walls and valve bodies
Al & Si	Servo cylinder walls and seals
Fe & Mg	Pump bearing liner

NOTES

1. High concentration of Fe and Mg accompanied by a chalky color in the fluid's appearance normally indicates moisture.

2. High concentration of Al and Si may also indicate contamination from ground test unit.

OH-58A/C
HYDRAULIC SYSTEMS

JOAP ATOMIC EMISSION ROTRODE

	Fe	Ag	Al	Cr	Cu	Mg	B	Si	Zn
Abnormal Trend (PPM Increase in 10 hrs)	4		9	3	4	11		7	
Normal Range	0-24		0-32	0-9	0-14	0-38		0-25	
Marginal Range	25-29		33-39	10-11	15-17	39-47		26-31	
High Range	30-36		40-48	12-13	18-22	48-58		32-38	
Abnormal	≥37		≥49	≥14	≥23	≥59	10	≥39	10

Elevated boron (B) and/or zinc (Zn) concentrations usually indicate contamination with another oil type, primarily MIL-PRF-2104. Recommend resampling and retesting immediately. If new value exceeds 8.0 PPM, run check with D19-0 to ensure proper instrument function. When proper function is confirmed, report both results and suspected contamination with MIL-PRF-2104 to chain of command, maintenance chief, cognizant engineering authority (Army and Navy only), and other personnel as specified by local written procedures. Recommend flushing and retesting of contaminated pre-oilers, carts, or other reservoirs where contamination is found until both B and Zn concentrations fall below 8.0 PPM. Refer to JOAP Manual Volume II Section IX, page 9-1 for more information. Recommend segregation of confirmed or suspected contaminated stocks, and submit information (batch no., lot no., MIL-PRF, nature of problem, etc.) on such stocks through the Defense supply deficiency reporting system.

Fe	Pump piston shoe plates Piston cylinder body or bearing assemblies
Fe & Cu	Pump piston shoes and cage retainer
Al	Servo cylinder walls
Al & Si	Servo cylinder walls and seals
Mg	Pump bearing liner

NOTES

High concentration of Fe and Mg sometimes accompanied by a dark, chalky color in the fluid's appearance normally indicates corrosion due to moisture.

APPENDIX B

CURRENT SERVICE EQUIPMENT NOT ENROLLED IN THE JOAP- NO SPECTROMETRIC SAMPLING REQUIRED.

End Item	Engine/Component
AH-1W	T700-401
AH-64	Engine Intermediate Gearbox Tail Rotor Gearbox
C-17	F117-PW-100
C-130/E-2C/E2-C+/C-2/P-3	T56 (all series – Air Force)
F/A-18A/B/C/D & TF-18A	F4404-GE-400/402
F/A-18A/B/C/D	GTCP36-200
F/A-18E/F	F414-GE-400
H-60 (All Series) (Air Force)	Main Transmission Intermediate Gearbox Tail Gearbox
HH-60H, MH-60S, SH-60B/F	T700-401C
KC-135R/T	F108-CF-100GE
RC-135U/V/W	TF33-P-5, TF33-P-9, F108-CF-201A
S-3B	TF34-GE-400B
SH-60	Main Gearbox
T-43A	JT8D-9A
TH-1H/G (Air Force)	Transmission Intermediate Gearbox Tail Rotor Gearbox
UH-1N	T400-CP-400
UH-60A	Engine

Note: The KC-10 with the CF6-50C2 engines are sampled and monitored by the KC-10 Contractor Support Facility. Accordingly, no guidance is included in this manual.

THIS PAGE INTENTIONALLY LEFT BLANK